User's Manual

μPD720114

User's Manual: Hardware

ECOUSB™ Series
USB 2.0 Hub Controller

All information contained in these materials, including products and product specifications, represents information on the product at the time of publication and is subject to change by Renesas Electronics Corp. without notice. Please review the latest information published by Renesas Electronics Corp. through various means, including the Renesas Electronics Corp. website (http://www.renesas.com).

Renesas Electronics
www.renesas.com

Sep 2015

Notice

1. Descriptions of circuits, software and other related information in this document are provided only to illustrate the operation of semiconductor products and application examples. You are fully responsible for the incorporation of these circuits, software, and information in the design of your equipment. Renesas Electronics assumes no responsibility for any losses incurred by you or third parties arising from the use of these circuits, software, or information.
2. Renesas Electronics has used reasonable care in preparing the information included in this document, but Renesas Electronics does not warrant that such information is error free. Renesas Electronics assumes no liability whatsoever for any damages incurred by you resulting from errors in or omissions from the information included herein.
3. Renesas Electronics does not assume any liability for infringement of patents, copyrights, or other intellectual property rights of third parties by or arising from the use of Renesas Electronics products or technical information described in this document. No license, express, implied or otherwise, is granted hereby under any patents, copyrights or other intellectual property rights of Renesas Electronics or others.
4. You should not alter, modify, copy, or otherwise misappropriate any Renesas Electronics product, whether in whole or in part. Renesas Electronics assumes no responsibility for any losses incurred by you or third parties arising from such alteration, modification, copy or otherwise misappropriation of Renesas Electronics product.
5. Renesas Electronics products are classified according to the following two quality grades: "Standard" and "High Quality". The recommended applications for each Renesas Electronics product depends on the product's quality grade, as indicated below.

   "Standard": Computers; office equipment; communications equipment; test and measurement equipment; audio and visual equipment; home electronic appliances; machine tools; personal electronic equipment; and industrial robots etc.

   "High Quality": Transportation equipment (automobiles, trains, ships, etc.); traffic control systems; anti-disaster systems; anti-crime systems; and safety equipment etc.

   Renesas Electronics products are neither intended nor authorized for use in products or systems that may pose a direct threat to human life or bodily injury (artificial life support devices or systems, surgical implantations etc.), or may cause serious property damages (nuclear reactor control systems, military equipment etc.). You must check the quality grade of each Renesas Electronics product before using it in a particular application. You may not use any Renesas Electronics product for any application for which it is not intended. Renesas Electronics shall not be in any way liable for any damages or losses incurred by you or third parties arising from the use of any Renesas Electronics product for which the product is not intended by Renesas Electronics.
6. You should use the Renesas Electronics products described in this document within the range specified by Renesas Electronics, especially with respect to the maximum rating, operating supply voltage range, movement power voltage range, heat radiation characteristics, installation and other product characteristics. Renesas Electronics shall have no liability for malfunctions or damages arising out of the use of Renesas Electronics products beyond such specified ranges.
7. Although Renesas Electronics endeavors to improve the quality and reliability of its products, semiconductor products have specific characteristics such as the occurrence of failure at a certain rate and malfunctions under certain use conditions. Further, Renesas Electronics products are not subject to radiation resistance design. Please be sure to implement safety measures to guard them against the possibility of physical injury, and injury or damage caused by fire in the event of the failure of a Renesas Electronics product, such as safety design for hardware and software including but not limited to redundancy, fire control and malfunction prevention, appropriate treatment for aging degradation or any other appropriate measures. Because the evaluation of microcomputer software alone is very difficult, please evaluate the safety of the final products or systems manufactured by you.
8. Please contact a Renesas Electronics sales office for details as to environmental matters such as the environmental compatibility of each Renesas Electronics product. Please use Renesas Electronics products in compliance with all applicable laws and regulations that regulate the inclusion or use of controlled substances, including without limitation, the EU RoHS Directive. Renesas Electronics assumes no liability for damages or losses occurring as a result of your noncompliance with applicable laws and regulations.
9. Renesas Electronics products and technology may not be used for or incorporated into any products or systems whose manufacture, use, or sale is prohibited under any applicable domestic or foreign laws or regulations. You should not use Renesas Electronics products or technology described in this document for any purpose relating to military applications or use by the military, including but not limited to the development of weapons of mass destruction. When exporting the Renesas Electronics products or technology described in this document, you should comply with the applicable export control laws and regulations and follow the procedures required by such laws and regulations.
10. It is the responsibility of the buyer or distributor of Renesas Electronics products, who distributes, disposes of, or otherwise places the product with a third party, to notify such third party in advance of the contents and conditions set forth in this document, Renesas Electronics assumes no responsibility for any losses incurred by you or third parties as a result of unauthorized use of Renesas Electronics products.
11. This document may not be reproduced or duplicated in any form, in whole or in part, without prior written consent of Renesas Electronics.
12. Please contact a Renesas Electronics sales office if you have any questions regarding the information contained in this document or Renesas Electronics products, or if you have any other inquiries.

(Note 1) "Renesas Electronics" as used in this document means Renesas Electronics Corporation and also includes its majority-owned subsidiaries.

(Note 2) "Renesas Electronics product(s)" means any product developed or manufactured by or for Renesas Electronics.

(2012.4)

NOTES FOR CMOS DEVICES

(1) VOLTAGE APPLICATION WAVEFORM AT INPUT PIN: Waveform distortion due to input noise or a reflected wave may cause malfunction. If the input of the CMOS device stays in the area between VIL (MAX) and VIH (MIN) due to noise, etc., the device may malfunction. Take care to prevent chattering noise from entering the device when the input level is fixed, and also in the transition period when the input level passes through the area between VIL (MAX) and VIH (MIN).

(2) HANDLING OF UNUSED INPUT PINS: Unconnected CMOS device inputs can be cause of malfunction. If an input pin is unconnected, it is possible that an internal input level may be generated due to noise, etc., causing malfunction. CMOS devices behave differently than Bipolar or NMOS devices. Input levels of CMOS devices must be fixed high or low by using pull-up or pull-down circuitry. Each unused pin should be connected to VDD or GND via a resistor if there is a possibility that it will be an output pin. All handling related to unused pins must be judged separately for each device and according to related specifications governing the device.

(3) PRECAUTION AGAINST ESD: A strong electric field, when exposed to a MOS device, can cause destruction of the gate oxide and ultimately degrade the device operation. Steps must be taken to stop generation of static electricity as much as possible, and quickly dissipate it when it has occurred. Environmental control must be adequate. When it is dry, a humidifier should be used. It is recommended to avoid using insulators that easily build up static electricity. Semiconductor devices must be stored and transported in an anti-static container, static shielding bag or conductive material. All test and measurement tools including work benches and floors should be grounded. The operator should be grounded using a wrist strap. Semiconductor devices must not be touched with bare hands. Similar precautions need to be taken for PW boards with mounted semiconductor devices.

(4) STATUS BEFORE INITIALIZATION: Power-on does not necessarily define the initial status of a MOS device. Immediately after the power source is turned ON, devices with reset functions have not yet been initialized. Hence, power-on does not guarantee output pin levels, I/O settings or contents of registers. A device is not initialized until the reset signal is received. A reset operation must be executed immediately after power-on for devices with reset functions.

(5) POWER ON/OFF SEQUENCE: In the case of a device that uses different power supplies for the internal operation and external interface, as a rule, switch on the external power supply after switching on the internal power supply. When switching the power supply off, as a rule, switch off the external power supply and then the internal power supply. Use of the reverse power on/off sequences may result in the application of an overvoltage to the internal elements of the device, causing malfunction and degradation of internal elements due to the passage of an abnormal current. The correct power on/off sequence must be judged separately for each device and according to related specifications governing the device.

(6) INPUT OF SIGNAL DURING POWER OFF STATE : Do not input signals or an I/O pull-up power supply while the device is not powered. The current injection that results from input of such a signal or I/O pull-up power supply may cause malfunction and the abnormal current that passes in the device at this time may cause degradation of internal elements. Input of signals during the power off state must be judged separately for each device and according to related specifications governing the device.

ECOUSB is a trademark of Renesas Electronics Corporation.

Major Revisions in this Edition

Page	Description
	Delete unnecessary description

The mark <R> shows major revised points.

The revised points can be easily searched by copying an "<R>" in the PDF file and specifying it in the "Find what:" field.

PREFACE

Readers

This manual is intended for engineers who need to be familiar with the capability of the μPD720114 in order to develop application systems based on it.

Purpose

The purpose of this manual is to help users understand the hardware capabilities (listed below) of the μPD720114.

Configuration

This manual consists of the following chapters:

- Introduction
- Pin functions
- Descriptors information
- USB requests information
- How to connect to external discrete components
- Product specifications
- Application information

Guidance

Readers of this manual should already have a general knowledge of electronics, logic circuits, and microcomputers.

Notation

This manual uses the following conventions:

Data bit significance:	High-order bits on the left side; low-order bits on the right side
Active low:	XXXXB (Pin and signal names are suffixed with B.)
Note:	Explanation of an indicated part of text
Caution:	Information requiring the user's special attention
Remark:	Supplementary information
Numerical value:	Binary ... xxxx or xxxxb Decimal ... xxxx Hexadecimal ... xxxxh

Related Document

Use this manual in combination with the following document.
The related documents indicated in this publication may include preliminary versions. However, preliminary versions are not marked as such.

μPD720114 Data Sheet: R19DS0076E

CONTENTS

CHAPTER 1 INTRODUCTION 1

1.1 Features 1
1.2 Ordering Information 1
1.3 Block Diagram 2
1.4 Pin Configuration (Top View) 4
1.5 Pin Information 7

CHAPTER 2 PIN FUNCTIONS 8

2.1 Power Supply 8
2.2 Analog Signaling 8
2.3 System Clock & Reset 8
2.4 USB Hub Interface 9
2.5 USB Interface 10
2.6 System Interface 10
2.7 Test Signals 10

CHAPTER 3 DESCRIPTORS INFORMATION 11

3.1 Device Descriptor 11
3.2 Device_Qualifier descriptor 12
3.3 Configuration descriptor 12
3.4 Interface descriptor 13
3.5 Endpoint descriptor 13
3.6 Other_Speed_Configuration descriptor 14
3.7 String descriptors 14
3.8 Class Specified – Hub Class Descriptor 15

CHAPTER 4 USB REQUESTS INFORMATION 16

4.1 Standard Requests 16
4.2 Class-Specific Requests 18
4.3 The Response for Each Transaction 20
4.4 Hub Status Field and Hub Change Field 25
4.5 Port Status Field and Port Change Field 26

CHAPTER 5 HUB'S BEHAVIOR FUNCTION 28

5.1 Endpoint 1 28
5.2 PORT_INDICATOR 29

CHAPTER 6 HOW TO CONNECT TO EXTERNALDISCRETE COMPONENTS 32

6.1 USB Upstream Port Connection 32
6.2 USB Downstream Port Connection 32
6.3 Power Switching Connection 33

6.4 LED Connection..... 35
6.5 Crystal Connection 36
6.6 RREF and Internal Regulator Connection 37
6.7 Handling Unused Pins 38

CHAPTER 7 APPLICATION INFORMATION 39

7.1 4 Port Self-powered Individual Port Power Management Hub 39
7.2 3 Port Bus/self-powered Individual Port Power Management Hub 40
7.3 4 Port Self-powered Ganged Port Power Management Hub 41
7.4 2 Port Hub with One Embedded Device 42

LIST OF FIGURES

Figure No.	Title	Page
5-1	Port Indicator State Diagram	29
6-1	USB Upstream Port Connection	32
6-2	USB Downstream Port Connection	32
6-3	Individual Port Power Switching and Individual Port Over-current Protection	33
6-4	Self-powered, Global Over-current Protection by Polymeric PTC	34
6-5	LED Connection	35
6-6	Crystal Connection	36
6-7	RREF and Internal Regulator Connection	37
6-8	RREF and Internal Regulator Connection	38
7-1	4 Port Self-powered Individual Port Power Management Hub with LED Indicator Diagram	39
7-2	3 Port Bus/self-powered Individual Port Power Management Hub Diagram	40
7-3	4 Port Self-powered Ganged Port Power Management Hub without LED Indicator Diagram	41
7-4	2 Port Hub with Embedded Device Diagram	42

LIST OF TABLES

Table No.	Title	Page
4-1	Hub Status Field, *wHubStatus*	25
4-2	Hub Change Field, *wHubChange*	25
4-3	Port Status Field, *wPortStatus*	26
4-4	Port Change Field, *wPortChange*	27
5-1	Endpoint 1 Bitmap	28
5-2	Indicator Colors and Port Status	30
5-3	Port Indicator Selectors	30
6-1	External Parameters	36

CHAPTER 1 INTRODUCTION

The μPD720114 is a USB 2.0 hub device that complies with the Universal Serial Bus (USB) Specification Revision 2.0 and works up to 480 Mbps. USB2.0 compliant transceivers are integrated for upstream and all downstream ports. The μPD720114 works backward compatible either when any one of the downstream ports is connected to a USB 1.1 compliant device, or when the upstream port is connected to a USB 1.1 compliant host.

1.1 Features

- Compliant with Universal Serial Bus Specification Revision 2.0 (Data Rate 1.5/12/480 Mbps)
- High-speed or full-speed packet protocol sequencer for Endpoint 0/1
- 4 (Max.) downstream facing ports
- Low power consumption (10 μA when hub in idle status, 149 mA when all parts run in HS mode)
- All downstream facing ports can handle high-speed (480 Mbps), full-speed (12 Mbps), and low-speed (1.5 Mbps) transaction.
- Supports split transaction to handle full-speed and low-speed transaction on downstream facing ports when Hub controller is working in high-speed mode.
- One Transaction Translator per Hub and supports four non-periodic buffers
- Supports self-powered and bus-powered mode
- Supports individual or global over-current detection and individual or ganged power control
- Supports downstream port status with LED
- Supports non-removable devices by I/O pin configuration
- Support Energy Star for PC peripheral system
- On chip Rpu, Rpd resistors and regulator (for core logic)
- Use 30 MHz crystal
- 3.3 V power supply

1.2 Ordering Information

Part Number	Package	Remark
μPD720114GA-9EU-A	48-pin plastic TQFP (Fine pitch) (7 × 7)	Lead-free product
μPD720114GA-YEU-A	48-pin plastic TQFP (Fine pitch) (7 × 7)	Lead-free product
μPD720114GA-YEU-AT	48-pin plastic TQFP (Fine pitch) (7 × 7)	Lead-free product
μPD720114K9-4E4-A	40-pin plastic QFN (6 × 6)	Lead-free product

1.3 Block Diagram

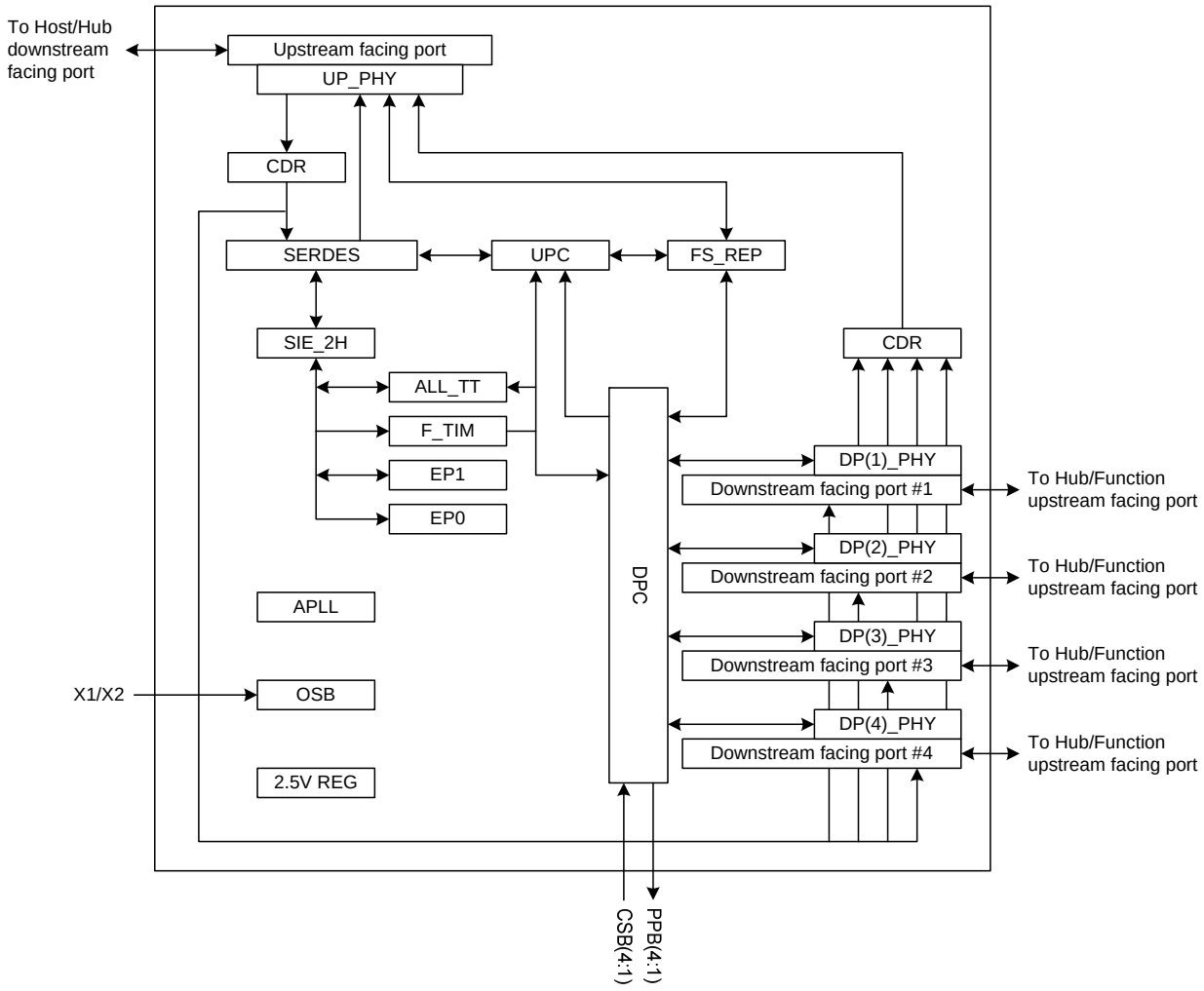

APLL	:	Generates all clocks of Hub.
ALL_TT	:	Translates the high-speed transactions (split transactions) for full/low-speed device to full/low-speed transactions. ALL_TT buffers the data transfer from either upstream or downstream direction. For OUT transaction, ALL_TT buffers data from upstream port and sends it out to the downstream facing ports after speed conversion from high-speed to full/low-speed. For IN transaction, ALL_TT buffers data from downstream ports and sends it out to the upstream facing ports after speed conversion from full/low-speed to high-speed.
CDR	:	Data & clock recovery circuit
DPC	:	Downstream Port Controller handles Port Reset, Enable, Disable, Suspend and Resume
DP(n)_PHY	:	Downstream transceiver supports high-speed (480 Mbps), full-speed (12 Mbps), and low-speed (1.5 Mbps) transaction
EP0	:	Endpoint 0 controller
EP1	:	Endpoint 1 controller
F_TIM (Frame Timer)	:	Manages hub's synchronization by using micro-SOF which is received at upstream port, and generates SOF packet when full/low-speed device is attached to downstream facing port.
FS_REP	:	Full/low-speed repeater is enabled when the μPD720114 is worked at full-speed mode
OSB	:	Oscillator Block
2.5V REG	:	On chip 2.5V regulator
SERDES	:	Serializer and Deserializer
SIE_2H	:	Serial Interface Engine (SIE) controls USB2.0 and 1.1 protocol sequencer.
UP_PHY	:	Upstream Transceiver supports high-speed (480 Mbps), full-speed (12 Mbps) transaction
UPC	:	Upstream Port Controller handles Suspend and Resume

1.4 Pin Configuration (Top View)

- **48-pin plastic TQFP (Fine pitch) (7 × 7)**

μPD720114GA-9EU-A
μPD720114GA-YEU-A
μPD720114GA-YEU-AT

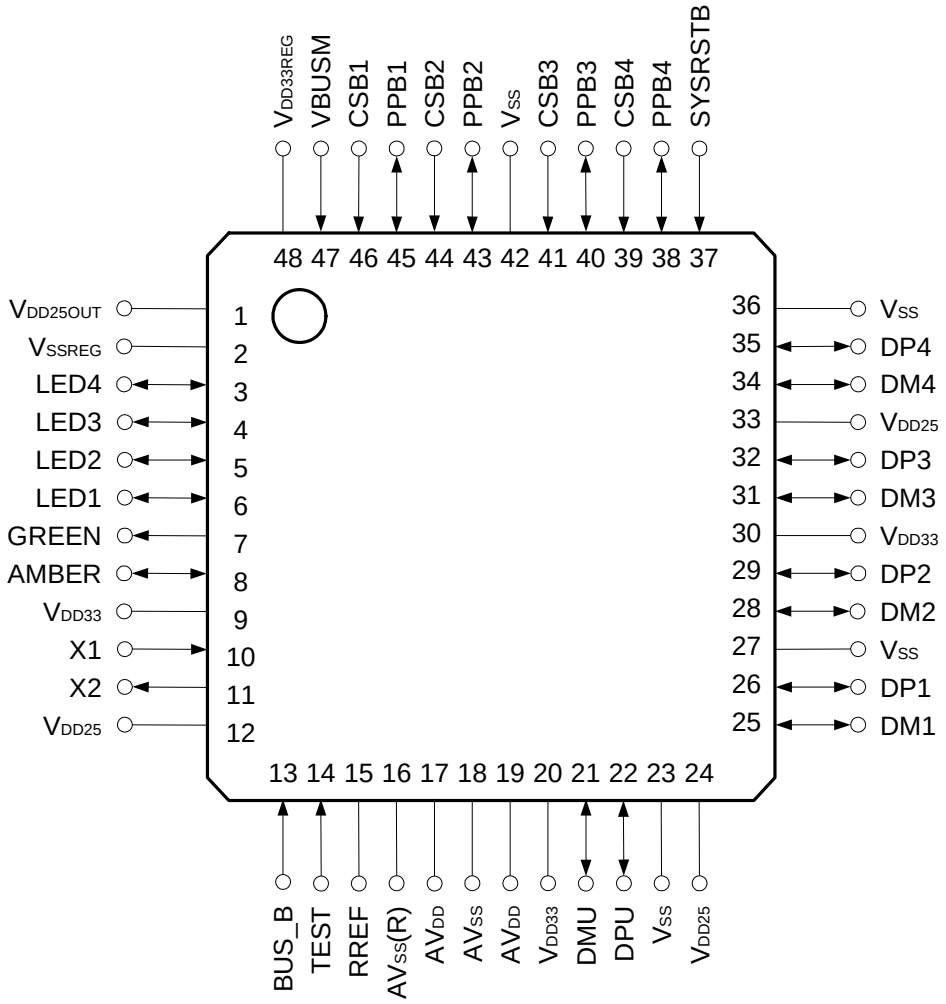

Pin No.	Pin Name	Pin No.	Pin Name	Pin No.	Pin Name	Pin No.	Pin Name
1	$V_{DD25OUT}$	13	BUS_B	25	DM1	37	SYSRSTB
2	V_{SSREG}	14	TEST	26	DP1	38	PPB4
3	LED4	15	RREF	27	V_{SS}	39	CSB4
4	LED3	16	AV_{SS}(R)	28	DM2	40	PPB3
5	LED2	17	AV_{DD}	29	DP2	41	CSB3
6	LED1	18	AV_{SS}	30	V_{DD33}	42	V_{SS}
7	GREEN	19	AV_{DD}	31	DM3	43	PPB2
8	AMBER	20	V_{DD33}	32	DP3	44	CSB2
9	V_{DD33}	21	DMU	33	V_{DD25}	45	PPB1
10	X1	22	DPU	34	DM4	46	CSB1
11	X2	23	V_{SS}	35	DP4	47	VBUSM
12	V_{DD25}	24	V_{DD25}	36	V_{SS}	48	$V_{DD33REG}$

Remark AV_{SS}(R) should be used to connect RREF through 1 % precision reference resistor of 2.43 kΩ.

- **40-pin plastic QFN (6 × 6)**

μPD720114K9-4E4-A

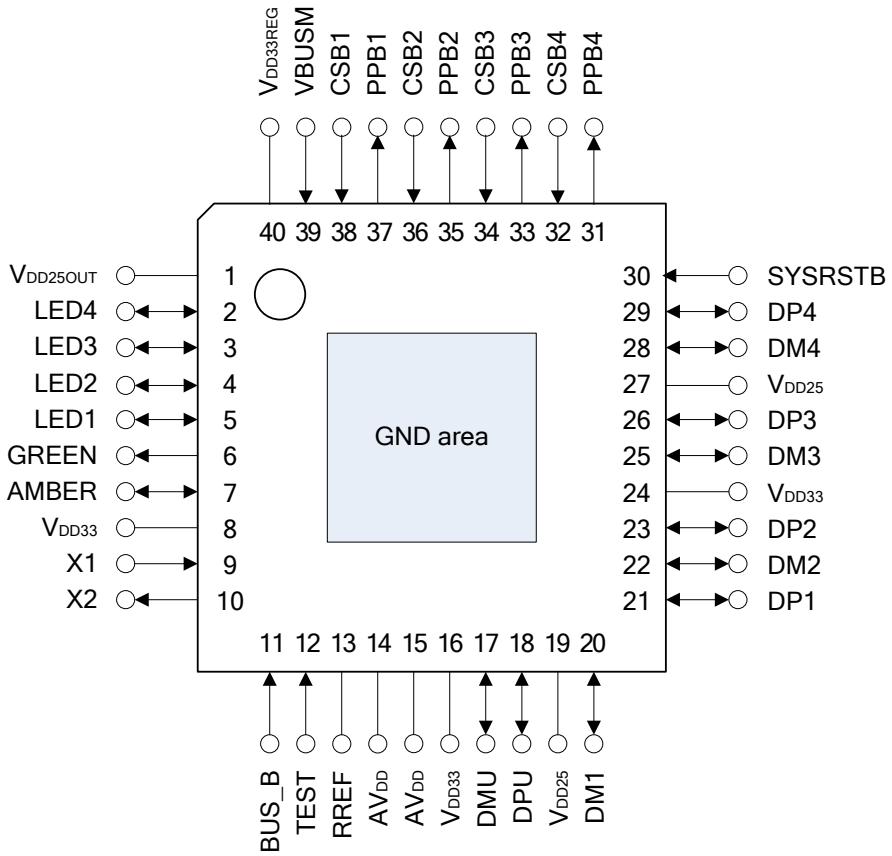

Pin No.	Pin Name	Pin No.	Pin Name	Pin No.	Pin Name	Pin No.	Pin Name
1	$V_{DD25OUT}$	11	BUS_B	21	DP1	31	PPB4
2	LED4	12	TEST	22	DM2	32	CSB4
3	LED3	13	RREF	23	DP2	33	PPB3
4	LED2	14	AV_{DD}	24	V_{DD33}	34	CSB3
5	LED1	15	AV_{DD}	25	DM3	35	PPB2
6	GREEN	16	V_{DD33}	26	DP3	36	CSB2
7	AMBER	17	DMU	27	V_{DD25}	37	PPB1
8	V_{DD33}	18	DPU	28	DM4	38	CSB1
9	X1	19	V_{DD25}	29	DP4	39	VBUSM
10	X2	20	DM1	30	SYSRSTB	40	$V_{DD33REG}$

Remark RREF should be connected to ground through 1% precision reference resistor of 2.43 kΩ.

1.5 Pin Information

Pin Name	I/O	Buffer Type	Active Level	Function
X1	I	2.5 V input		30 MHz crystal oscillator in
X2	O	2.5 V output		30 MHz crystal oscillator out
SYSRSTB	I	3.3 V Schmitt input	Low	Asynchronous chip hardware reset
DP(4:1)	I/O	USB D+ signal I/O		USB's downstream facing port D+ signal
DM(4:1)	I/O	USB D– signal I/O		USB's downstream facing port D– signal
DPU	I/O	USB D+ signal I/O		USB's upstream facing port D+ signal
DMU	I/O	USB D– signal I/O		USB's upstream facing port D– signal
BUS_B	I	3.3 V Schmitt input		Power mode select
RREF	A (O)	Analog		Reference resistor connection
CSB1	I	5 V tolerant Schmitt input	Low	Port's over-current status input
CSB(4:2)	I	3.3 V Schmitt input	Low	Port's over-current status input
PPB(4:1)	I/O	3.3 V output/input	Low	Port's power supply control output or hub configuration input
VBUSM	I	5 V tolerant Schmitt input		Upstream V_{BUS} monitor
AMBER	I/O	3.3V output/input		Amber colored LED control output or port indicator select
GREEN	O	3.3V output		Green colored LED control output or port indicator select
LED(4:1)	I/O	3.3V output/input	Low	LED indicator output show downstream port status or Removable/Non-removable select
TEST	I	3.3 V Schmitt input		Test signal
$V_{DD25OUT}$				On chip 2.5 V output, supply the V_{DD25} for the chip self, it must have a 22 μF (or greater) capacitor to V_{SSREG}.
V_{DD33}				3.3 V V_{DD}
$V_{DD33REG}$				3.3 V V_{DD} for on chip 2.5 V regulator input, it must have a 4.7 μF (or greater) capacitor to V_{SSREG}
V_{DD25}				2.5 V V_{DD}, These pins must be supplied from $V_{DD25OUT}$, output from internal regulator
AV_{DD}				2.5 V V_{DD} for analog circuit
V_{SS}				V_{SS}
V_{SSREG}				On chip 2.5 V regulator V_{SS}
AV_{SS}				V_{SS} for analog circuit
AV_{SS}(R)				V_{SS} for reference resistor, Connect to AV_{SS}.

Remark "5 V tolerant" means that the buffer is 3 V buffer with 5 V tolerant circuit.

CHAPTER 2 PIN FUNCTIONS

The pin type describes a signal either as analog, power, input, or I/O (bi-directional).

2.1 Power Supply

Pin	Direction	Function
V_{DD33}	Power	+3.3 V power supply
$V_{DD33REG}$	Power	+3.3 V power supply for on chip 2.5 V regulator input, it must have a 4.7 μF (or greater) capacitor to V_{SSREG}.
V_{DD25}	Power	+2.5 V core power line, it must have a 0.1 μF (or greater) capacitor to V_{SS}. These pins must be supplied from $V_{DD25OUT}$, output from internal regulator
$V_{DD25OUT}$	Power	On chip 2.5 V output, supply the V_{DD25} for the chip self, it must have a 22 μF (or greater) capacitor to V_{SSREG}.
AV_{DD}	Power	+2.5 V analog circuit power line, it must have a 0.1 μF (or greater) capacitor to V_{SS}.
V_{SS}	Power	Ground
V_{SSREG}	Power	Ground for on chip 2.5 V regulator
AV_{SS}	Power	Ground for analog circuit
AV_{SS}(R)	Power	Ground for reference resistor

Remark Self-Powered Hub System requires the capability of providing 500 mA for each downstream facing port. And additional power consumption of Hub Controller itself and other components in the Hub System should also be considered for overall power requirement. A power source that is able to supply at least 2.5 A may be best for a 4 port Self-Powered Hub System.

2.2 Analog Signaling

Pin	Direction	Function
RREF	Analog	RREF must be connected a 1 % precision reference resistor of 2.43 kΩ. The other side of the resistor must be connected to AV_{SS}(R) which must then it must be connected to AV_{SS}.

2.3 System Clock & Reset

Pin	Direction	Function
X1	I	Oscillator crystal input. Connect to 30-MHz crystal
X2	O	Oscillator crystal output. Connect through a series resistor to other end of 30-MHz crystal.
SYSRSTB	I	Asynchronous active low reset signal

2.4 USB Hub Interface

Pin	Direction	Function
CSB(4:1)	I	Over-current status input of the downstream facing ports. 1: No over-current condition detected. 0: Over-current condition detected. If the pin is not used, connect to GND or V_{DD33}.
PPB(4:1)	I/O	Power supply control output for downstream facing ports (open-drain). 1: Power supply OFF 0: Power supply ON By strapping PPB(4:1) pins before system reset (see Chapter 5 and 7), the active ports, power management mode and bPwrOn2PwrGood descriptor can configure as bellow: PPB [4:3] = 00: 2 downstream facing ports active. = 01: 3 downstream facing ports active = 11: 4 downstream facing ports active PPB2 = 0: ganged power management mode =1: individual power management mode PPB1 = 0: bPwrOn2PwrGood = 00h(0 ms, with no power switches) = 1: bPwrOn2PwrGood = 32h(100 ms)
VBUSM	I	Upstream Vbus monitor.
LED(4:1)	I/O	Connect to downstream facing port status indicator LED (open drain). See **Figure 6-5. LED Connection**. If port indicator is not used, connect GREEN to AMBER directly. The LED(4:1) can configure for removable/non-removable selection: 0: Removable 1: Non-removable
AMBER	I/O	Connect to amber colored LED. See **Figure 6-5. LED Connection**. The meaning of amber colored LED is described in section **CHAPTER 5 HUB'S BEHAVIOR FUNCTION**. If port indicator is not used, connect it to GREEN directly.
GREEN	O	Connect to green colored LED. See **Figure 6-5. LED Connection**. The meaning of green colored LED is described in section **CHAPTER 5 HUB'S BEHAVIOR FUNCTION**. If port indicator is not used, connect it to AMBER directly.

Remark VBUSM pin may be used to monitor the V_{BUS} line even if V_{DD33} is shut off. For example, the internal Rpu for the DPU pin is powered by VBUSM for port speed indication. The input voltage level for VBUSM pin should be less than 3.3 V in order not to exceed the absolute maximum rating. Refer to **Figure 6-1. USB Upstream Port Connection** and use voltage divider resistors to monitor V_{BUS}.

Remark PPB pin is asserted when μPD720114 received SetConfiguration(1), and received SetPortFearture(PortPower) from host controller.
μPD720114 de-asserts PPB pins in the following cases.

- It detects the Over-current on a down stream port
- It receives ClearPortFeature(PortPower)
- It goes into Unconfigured state

2.5 USB Interface

Pin	Direction	Function
DP(4:1)	I/O	Connect to downstream port D+ signal line. If not using the downstream port, connect to GND.
DM(4:1)	I/O	Connect to downstream port D− signal line. If not using the downstream port, connect to GND.
DPU	I/O	Connect to upstream facing port D+ signal line.
DMU	I/O	Connect to upstream facing port D− signal line.

Remark Until Up Stream port is connected to USB Host & μPD720114 is configured, it drives low both on DP(4:1)/DM(4:1)(SE0).

2.6 System Interface

Pin	Direction	Function
BUS_B	I	Select power mode 0: Bus-powered 1: Self-powered

2.7 Test Signals

Pin	Direction	Caution
TEST	I	Should be tied to GND on circuit board.

CHAPTER 3 DESCRIPTORS INFORMATION

This chapter describes the descriptors implemented in hub controller. The μPD720114 has following descriptors. Host reads these descriptors by using Get Descriptor request.

- Device Descriptor
- Device Qualifier Descriptor
- Configuration Descriptor
- Interface Descriptor
- Endpoint Descriptor
- Other Speed Configuration Descriptor
- Hub Class-specific Descriptor

The hub returns different descriptors depending on whether it is operating at high-speed or full-speed. The following section shows descriptor sets for full-speed operation and high-speed operation.

3.1 Device Descriptor

The hub returns Device descriptor by GET_DESCRIPTOR (Device) request.

Offset	Field Name	Full-speed	High-speed	Description
0	bLength	12h	12h	18 bytes
1	bDescriptorType	01h	01h	
2	bcdUSB	0200h	0200h	USB specification 2.0
4	bDeviceClass	09h	09h	Hub
5	bDeviceSubClass	00h	00h	
6	bDeviceProtocol	00h	01h	Single TT for high-speed
7	bMxPacketSize0	40h	40h	64 bytes
8	idVendor	0409h	0409h	"NEC"
10	idProduct	005Ah	005Ah	"USB 2.0 Hub Controller"
12	bcdDevice	0100h	0100h	"1.00"
14	iManufacturer	00h	00h	
15	iProduct	00h	00h	
16	iSerialNumber	00h	00h	
17	bNumConfigurations	01h	01h	One configuration

3.2 Device_Qualifier descriptor

The hub returns Device_Qualifier descriptor by GET_DESCRIPTOR (Device_Qualifier) request.

Offset	Field Name	Full-speed	High-speed	Description
0	bLength	0Ah	0Ah	10 bytes
1	bDescriptorType	06h	06h	
2	bcdUSB	0200h	0200h	USB specification 2.0
4	bDeviceClass	09h	09h	Hub
5	bDeviceSubClass	00h	00h	
6	bDeviceProtocol	01h	00h	Single TT for high-speed
7	bMaxPacketSize0	40h	40h	64 bytes
8	bNumConfigurations	01h	01h	
9	bReserved	00h	00h	

3.3 Configuration descriptor

The hub returns Configuration descriptor by GET_DESCRIPTOR (Configuration) request.

Offset	Field Name	Full-speed	High-speed	Description
0	bLength	09h	09h	9 bytes
1	bDescriptorType	02h	02h	
2	wTotalLength	0019h	0019h	25 bytes
4	bNumInterfaces	01h	01h	One interface
5	bConfigurationValue	01h	01h	
6	iConfiguration	00h	00h	
7	bmAttributes	E0h	E0h	
8	bMaxPower	32h	32h	100 mA

3.4 Interface descriptor

The hub returns Configuration descriptor followed by Interface descriptor.

Offset	Field Name	Full-speed	High-speed	Description
0	bLength	09h	09h	9 bytes
1	bDescriptorType	04h	04h	
2	bInterfaceNumber	00h	00h	
3	bAlternateSetting	00h	00h	
4	bNumEndpoints	01h	01h	
5	bInterfaceClass	09h	09h	
6	bInterfaceSubClass	00h	00h	
7	bInterfaceProtocol	00h	00h	
8	iInterface	00h	00h	

3.5 Endpoint descriptor

The hub returns Configuration/Interface descriptor followed by Endpoint descriptor.

Offset	Field Name	Full-speed	High-speed	Description
0	bLength	07h	07h	7 bytes
1	bDescriptorType	05h	05h	
2	bEndpointAddress	81h	81h	EP1, IN direction
3	bmAttributes	03h	03h	Interrupt endpoint
4	wMaxPacketSize	0001h	0001h	1 byte
6	bInterval	FFh	0Ch	Polling interval

3.6 Other_Speed_Configuration descriptor

The hub returns Other_Speed_Configuration descriptor by GET_DESCRIPTOR (Other_Speed_Configuration) request.

Offset	Field Name	Full-speed	High-speed	Description
0	bLength	09h	09h	9 bytes
1	bDescriptorType	07h	07h	
2	wTotalLength	0019h	0019h	25 bytes
4	bNumInterfaces	01h	01h	
5	bConfigurationValue	01h	01h	
6	iConfiguration	00h	00h	
7	bmAttributes	E0h	E0h	
8	bMaxPower	32h	32h	100 mA

3.7 String descriptors

The μPD720114 doesn't support string descriptors, it will return "STALL" by GET_DESCRIPTOR (string) request.

3.8 Class Specified – Hub Class Descriptor

The hub returns Hub Class descriptors by GetHubDescriptor request.

Offset	Field Name	Value	Description	Pin configuration
0	bDescLength	09h	9 bytes	
1	bDescriptorType	29h	Hub	
2	bNbrPorts	04h 03h 02h	4 downstream facing ports 3 downstream facing ports 2 downstream facing ports	PPB [4:3] = 11 PPB [4:3] = 01 PPB [4:3] = 00
3	wHubCharacteristics	01b (D1:D0) 00b (D1:D0)	Individual port power switching Ganged power switching	PPB2 = 1 PPB2 = 0
		0b (D2) 1b (D2)	Not compound device Compound device	All LEDx = 0 **Note 1** Any LEDx = 1
		01b (D4:D3) 00b (D4:D3)	Individual port over-current protection Global over-current protection	PPB2 = 1 PPB2 = 0
		01b (D6:D5)	TT Think Time is 16 FS bit time	
		1b (D7) 0b	Support PORT_INDICATOR PORT_INDICATOR not support	LED connected **Note 2** GREEN = AMBER
5	bPwrOn2PwrGood	32h 00h	100 ms 0 ms	PPB1 = 1 **Note 3** PPB1 = 0
6	bHubContrCurrent	64h	Hub's current is "100 mA"	
7	DeviceRemovable	0b	Reserved	
		0b (D1) 1b (D1)	Device is removable Device is not removable	LED1 = 0 **Note 1** LED1 = 1
		0b (D2) 1b (D2)	Device is removable Device is not removable	LED2 = 0 **Note 1** LED2 = 1
		0b (D3) 1b (D3)	Device is removable Device is not removable	LED3 = 0 **Note 1** LED3 = 1
		0b (D4) 1b (D4)	Device is removable Device is not removable	LED4 = 0 **Note 1** LED4 = 1
8	PortPwrCtrlMask	FFh		

Notes 1. When port indicator is not used, connect GREEN to AMBER directly and the LED(4:1) can configure for removable/non-removable selection. Else if port indicator is used, connect LED with **Figure 6-5**, the downstream facing port of μPD720114 will be fixed at removable.

2. When LEDs are connected (see **Figure 6-5**), μPD720114 will report D7 of wHubCharacteristics with "1b" to host PC. Else if LEDs are not used, connect GREEN to AMBER directly; μPD720114 will report D7 of wHubCharacteristics with "0b" to host PC.

3. Bus-powered hub requires power switches. PPBx are for power switch control (see **Figure 6-3**). For low BOM cost self-powered hub design with no power switches (over current protection by polymeric PTC for logical power switching mode), set PPB2 = PPB1 = 0 (see **Figure 6-4**), bPwrOn2PwrGood is set at 0. It complies with the USB Specification.

CHAPTER 4 USB REQUESTS INFORMATION

When the μPD720114 is connected to a downstream facing port of a USB2.0 host controller or USB2.0 Hub, it operates in high-speed mode on the upstream facing port. The μPD720114 uses USB2.0 high-speed protocols to communicate with other USB2.0 devices. On the other hand, when the μPD720114 is connected to a downstream facing port of a USB1.x host controller or USB1.x Hub, it operates in full-speed mode. The μPD720114 uses USB2.0 full-speed protocols to communicate with the upstream controller.

- Handles setup transactions for Endpoint 0 which are controlled by the hub itself.
- Repeats setup transactions to other devices.
- Handles interrupt transactions for Endpoint 1 which retrieve status change information
- Repeats interrupt transactions to other devices.
- Repeats bulk transactions to other devices.
- Repeats isochronous transactions to other devices.
- Translates split transactions for USB1.X devices which are attached to the downstream facing port.
- Repeats split transactions to a USB2.0 hub which is attached to the downstream facing port.

This section describes requests supported by the μPD720114 default descriptor setting. Please refer to Chapter 9 and 11 in the USB specification rev. 2.0 for further detail.

4.1 Standard Requests

The μPD720114 supports all standard requests except for SET_DESCRIPTOR() and SYNCH_FRAME(). The following table shows the standard requests at the default setting.

(1/2)

Request	bmRequestType	bRequest	wValue	wIndex	wLength	Return
CLEAR_FEATURE (Device: Remote Wakeup)	00000000b	01h	0001h	0000h	0000h	None
CLEAR_FEATURE (Endpoint 0 Halt)	00000010b	01h	0000h	0000h / 0080h	0000h	None
CLEAR_FEATURE (Endpoint 1 Halt)	00000010b	01h	0000h	0081h	0000h	None
GET_CONFIGURATION	10000000b	08h	0000h	0000h	0001h	Current configuration value
GET_DESCRIPTOR (Device)	10000000b	06h	0100h	0000h	0012h Note	Device descriptor
GET_DESCRIPTOR (Configuration)	10000000b	06h	0200h	0000h	0019h Note	Configuration / Interface / Endpoint descriptors
GET_DESCRIPTOR (Device_Qualifier)	10000000b	06h	0600h	0000h	000Ah Note	Device_Qualifier

Note The wLength field specifies the number of bytes to return. If the data to be returned is longer than the wLength field, only wLength bytes of the descriptor are returned. If the data to be returned is shorter than the wLength field, the device ends the control transfer by sending a short packet when more data is requested.

(2/2)

Request	bmRequestType	bRequest	wValue	wIndex	wLength	Return
GET_DESCRIPTOR (Other_Speed_Configuration)	10000000b	06h	0700h	0000h	0019h **Note**	Other_Speed_Configuration
GET_INTERFACE	10000001b	0Ah	0000h	0000h	0001h	00h
GET_STATUS (Device)	10000000b	00h	0000h	0000h	0002h	Device status
GET_STATUS (Interface)	10000001b	00h	0000h	0000h	0002h	0000h
GET_STATUS (Endpoint 0)	10000010b	00h	0000h	0000h/ 0080h	0002h	Endpoint 0 status
GET_STATUS (Endpoint 1)	10000010b	00h	0000h	0081h	0002h	Endpoint 1 status
SET_ADDRESS	00000000b	05h	0000h to 007Fh	0000h	0000h	None
SET_CONFIGURATION	00000000b	09h	0000h/ 0001h	0000h	0000h	None
SET_FEATURE (Device: Remote Wakeup)	00000000b	03h	0001h	0000h	0000h	None
SET_FEATURE (Endpoint 0 Halt)	00000010b	03h	0000h	0000h/ 0080h	0000h	None
SET_FEATURE (Endpoint 1 Halt)	00000010b	03h	0000h	0081h	0000h	None
SET_FEATURE (Test_J)	00000000b	03h	0002h	0100h	0000h	None
SET_FEATURE (Test_K)	00000000b	03h	0002h	0200h	0000h	None
SET_FEATURE (Test_SE0_NAK)	00000000b	03h	0002h	0300h	0000h	None
SET_FEATURE (Test_Packet)	00000000b	03h	0002h	0400h	0000h	None
SET_FEATURE (Test_Force_Enable)	00000000b	03h	0002h	0500h	0000h	None
SET_INTERFACE	00000001b	0Bh	0000h	0000h	0000h	None

Note The wLength field specifies the number of bytes to return. If the data to be returned is longer than the wLength field, only wLength bytes of the descriptor are returned. If the data to be returned is shorter than the wLength field, the device ends the control transfer by sending a short packet when more data is requested.

4.2 Class-Specific Requests

The μPD720114 supports all class-specific requests except for SetHubDescriptor() and GetBusState(). The following table shows the class-specific requests at the default descriptor setting.

(1/2)

Request	bmRequestType	bRequest	wValue	wIndex	wLength	Return
ClearHubFeature (C_HUB_OVER_CURRENT)	00100000b	01h	0001h	0000h	0000h	None
ClearHubFeature (C_HUB_LOCAL_POWER)	00100000b	01h	0000h	0000h	0000h	None
ClearPortFeature (PORT_ENABLE)	00100011b	01h	0001h	0001h to 0004h	0000h	None
ClearPortFeature (PORT_SUSPEND)	00100011b	01h	0002h	0001h to 0004h	0000h	None
ClearPortFeature (PORT_POWER)	00100011b	01h	0008h	0001h to 0004h	0000h	None
ClearPortFeature (PORT_INDICATOR)	00100011b	01h	0016h	**Note 1**	0000h	None
ClearPortFeature (C_PORT_CONNECTION)	00100011b	01h	0010h	0001h to 0004h	0000h	None
ClearPortFeature (C_PORT_RESET)	00100011b	01h	0014h	0001h to 0004h	0000h	None
ClearPortFeature (C_PORT_ENABLE)	00100011b	01h	0011h	0001h to 0004h	0000h	None
ClearPortFeature (C_PORT_SUSPEND)	00100011b	01h	0012h	0001h to 0004h	0000h	None
ClearPortFeature (C_PORT_OVER_CURRENT)	00100011b	01h	0013h	0001h to 0004h	0000h	None
GetHubDescriptor	10100000b	06h	2900h	0000h	0009h **Note 2**	Hub descriptor
GetHubStatus	10100000b	00h	0000h	0000h	0004h	Hub status and change indicators. Refer to section **4.4**.

Notes 1. The high byte of the wIndex field is the selector identifying the specific indicator. And the low byte of the wIndex field shows port number. Refer to **CHAPTER 5 HUB'S BEHAVIOR FUNCTION** for details.

Value	Port Indicator Color	Port Indicator Mode
0h	Default	Automatic
1h	Amber	Manual
2h	Green	
3h	Off	
4h to FFh	Reserved	Reserved

2. The wLength field specifies the number of bytes to return. If the data to be returned is longer than the wLength field, only wLength bytes of the descriptor are returned. If the data to be returned is shorter than the wLength field, the device ends the control transfer by sending a short packet when more data is requested.

(2/2)

Request	bmRequestType	bRequest	wValue	wIndex	wLength	Return
GetPortStatus	10100011b	00h	0000h	0001h to 0004h	0004h	Port status and change indicators. Refer to section **4.5**.
SetPortFeature (PORT_RESET)	00100011b	03h	0004h	0001h to 0004h	0000h	None
SetPortFeature (PORT_SUSPEND)	00100011b	03h	0002h	0001h to 0004h	0000h	None
SetPortFeature (PORT_POWER)	00100011b	03h	0008h	0001h to 0004h	0000h	None
SetPortFeature (PORT_TEST: Test_J)	00100011b	03h	0015h	0101h to 0104h	0000h	None
SetPortFeature (PORT_TEST: Test_K)	00100011b	03h	0015h	0201h to 0204h	0000h	None
SetPortFeature (PORT_TEST: Test_SE0_NAK)	00100011b	03h	0015h	0301h to 0304h	0000h	None
SetPortFeature (PORT_TEST: Test_Packet)	00100011b	03h	0015h	0401h to 0404h	0000h	None
SetPortFeature (PORT_TEST: Test_Force_Enable)	00100011b	03h	0015h	0501h to 0504h	0000h	None
SetPortFeature (PORT_INDICATOR)	00100011b	03h	0016h	**Note 1**	0000h	None
ClearTTBuffer	00100011b	08h	**Note 2**	0001h	0000h	None
GetTTState	10100011b	0Ah	0000h	0001h	08D0h	TT state
ResetTT	00100011b	09h	0000h	0001h	0000h	None
StopTT	00100011b	0Bh	0000h	0001h	0000h	None

Notes 1. The high byte of the wIndex field is the selector identifying the specific indicator. And the low byte of the wIndex field shows port number. Refer to **CHAPTER 5 HUB'S BEHAVIOR FUNCTION** for details.

Value	Port Indicator Color	Port Indicator Mode
0h	Default	Automatic
1h	Amber	Manual
2h	Green	
3h	Off	
4h to FFh	Reserved	Reserved

2. The wValue for ClearTTBuffer is as follows.

Bits	Field
3..0	Endpoint Number
10..4	Device Address
12..11	Endpoint Type
14..13	Reserved, must be zero
15	Direction, 1 = IN, 0 = OUT

4.3 The Response for Each Transaction

USB specification rev. 2.0 states the device behavior in some states and conditions are not specified. The section describes the response of the μPD720114 in each state and condition at default setting.

(1/2)

Request		Condition				
		Default state	Address state	Configured state	Endpoint 0 halted	Invalid wValue
Standard Requests						
CLEAR_FEATURE						
	Device	STALL *	Request accepted	Request accepted	Request accepted	STALL
	Endpoint 0	STALL *	Request accepted	Request accepted	Request accepted	STALL
	Endpoint 1	STALL *	STALL	Request accepted	Request accepted	STALL
GET_CONFIGURATION		STALL *	Return data	Return data	STALL	STALL *
GET_DESCRIPTOR **Note**						
	Device	Return data	Return data	Return data	STALL	STALL
	Configuration	Return data	Return data	Return data	STALL	STALL
	String	STALL	STALL	STALL	STALL	STALL
	Device Qualifier	Return data	Return data	Return data	STALL	STALL
	Other Speed Configuration	Return data	Return data	Return data	STALL	STALL
GET_INTERFACE		STALL *	STALL	Return data	STALL	STALL *
GET_STATUS						
	Device	STALL *	Return data	Return data	Return data	STALL *
	Interface	STALL *	STALL	Return data	Return data	STALL *
	Endpoint 0	STALL *	Return data	Return data	Return data	STALL *
	Endpoint 1	STALL *	STALL	Return data	Return data	STALL *
SET_ADDRESS		Request accepted	Request accepted	STALL *	STALL	STALL *
SET_CONFIGURATION		STALL *	Request accepted	Request accepted	STALL	STALL *
SET_FEATURE						
	Device	STALL *	Request accepted	Request accepted	Request accepted	STALL
	Endpoint 0	STALL *	Request accepted	Request accepted	Request accepted	STALL
	Endpoint 1	STALL *	STALL	Request accepted	Request accepted	STALL
	TEST_MODE in HS mode	Request accepted	Request accepted	Request accepted	Request accepted	STALL
	TEST_MODE in FS mode	STALL	STALL	STALL	STALL	STALL
SET_INTERFACE		STALL *	STALL	Request accepted	STALL	STALL
Other Standard Requests		STALL	STALL	STALL	STALL	STALL

Note The wLength field specifies the number of bytes to return. If the data to be returned (or internal state of TT) is longer than the wLength field, only wLength bytes of the data (or internal state of TT) are returned. If the data to be returned (or internal state of TT) is shorter than the wLength field, the device ends the control transfer by sending a short packet when more data is requested.

(2/2)

Request		Condition				
		Default state	Address state	Configured state	Endpoint 0 halted	Invalid wValue
Class-specific Requests						
ClearHubFeature						
	C_HUB_LOCAL_POWER	No response *	No response *	Request accepted	Request accepted	STALL
	C_HUB_OVER_CURRENT	No response *	No response *	Request accepted	Request accepted	STALL
ClearPortFeature		No response *	No response *	Request accepted	Request accepted	STALL
GetHubDescriptor **Note 1, 2**		Return data *	Return data *	Return data	Return data	STALL
GetHubStatus		No response *	No response *	Return data	Return data	STALL
GetPortStatus		No response *	No response *	Return data	Return data	STALL
SetPortFeature **Note 3**						
	Except for *TEST_MODE*	No response *	No response *	Request accepted	Request accepted	STALL
	TEST_MODE in HS mode	No response *	No response *	Request accepted	Request accepted	STALL
	TEST_MODE in FS mode	STALL	STALL	STALL	STALL	STALL
ClearTTBuffer						
	In HS mode	No response *	No response *	Request accepted	Request accepted	**Note 4**
	In FS mode	STALL	STALL	STALL	STALL	STALL
GetTTState **Note 1**						
	In HS mode	No response *	No response *	Return data	Return data	STALL
	In FS mode	STALL	STALL	STALL	STALL	STALL
ResetTT						
	In HS mode	No response *	No response *	Request accepted	Request accepted	STALL
	In FS mode	STALL	STALL	STALL	STALL	STALL
StopTT						
	In HS mode	No response *	No response *	Request accepted	Request accepted	STALL
	In FS mode	STALL	STALL	STALL	STALL	STALL
Other Class-specific Requests		STALL	STALL	STALL	STALL	STALL
Normal transaction						
Interrupt for Endpoint 1		-	-	Return data	Return data	-

Notes 1. The wLength field specifies the number of bytes to return. If the data to be returned (or internal state of TT) is longer than the wLength field, only wLength bytes of the data (or internal state of TT) are returned. If the data to be returned (or internal state of TT) is shorter than the wLength field, the device ends the control transfer by sending a short packet when more data is requested.

2. If the hub is not configured, the hub's response to GetHubDescriptor request is undefined in USB specification. The μPD720114 will return data for the GetHubDescriptor request even in default or address state. It will not decode wValue field for GetHubDescriptor request and will ignore that field.

3. When the downstream facing port is in *TEST_MODE*, the μPD720114 returns ACK handshake for another SetPortFeature (*TEST_MODE*), but it discards that request. When the downstream facing port is in *TEST_MODE*, the μPD720114 does not respond for SetFeature (*TEST_MODE*). When the port is not in Disable, Disconnect, or Suspend State, the μPD720114 returns STALL handshake for SetPortFeature (*TEST_MODE*).

4. The μPD720114 decodes only bit14 and bit 13 for wValue field of ClearTTBuffer request. If wValue[14:13] does not match "00b", the μPD720114 will return STALL handshake. On the other hand,

If wValue[14:13] matches “00b”, the μPD720114 will return ACK handshake. And if the buffer for device address and endpoint number contained in wValue does not exist, this request will be ignored.

(1/2)

Request		Condition		
		Invalid wIndex	Invalid wLength	Endpoint 1 halted
Standard Requests				
CLEAR_FEATURE				
	Device	STALL	STALL *	-
	Endpoint 0	STALL	STALL *	-
	Endpoint 1	STALL	STALL *	-
GET_CONFIGURATION		STALL *	STALL *	-
GET_DESCRIPTOR **Note**				
	Device	STALL	-	-
	Configuration	STALL	-	-
	String	STALL	-	-
	Device Qualifier	STALL	-	-
	Other Speed Configuration	STALL	-	-
GET_INTERFACE		STALL	STALL *	-
GET_STATUS				
	Device	STALL *	STALL *	-
	Interface	STALL	STALL *	-
	Endpoint 0	STALL	STALL *	-
	Endpoint 1	STALL	STALL *	-
SET_ADDRESS		STALL *	STALL *	-
SET_CONFIGURATION		STALL *	STALL *	-
SET_FEATURE				
	Device	STALL	STALL *	-
	Endpoint 0	STALL	STALL *	-
	Endpoint 1	STALL	STALL *	-
	TEST_MODE in HS mode	STALL *	STALL *	-
	TEST_MODE in FS mode	STALL	STALL	-
SET_INTERFACE		STALL	STALL *	-
Other Standard Requests		STALL	STALL	-

Note The wLength field specifies the number of bytes to return. If the data to be returned (or internal state of TT) is longer than the wLength field, only wLength bytes of the data to be returned (or internal state of TT) are returned. If the data to be returned (or internal state of TT) is shorter than the wLength field, the device ends the control transfer by sending a short packet when more data is requested.

(2/2)

Request		Condition		
		Invalid wIndex	Invalid wLength	Endpoint 1 halted
Class-specific Requests				
ClearHubFeature		STALL	STALL	-
ClearPortFeature		STALL	STALL	-
GetHubDescriptor **Note 1, 2**		STALL	-	-
GetHubStatus		STALL	STALL	-
GetPortStatus		STALL	STALL	-
SetPortFeature **Note 3**				
	Except for *TEST_MODE*	STALL	STALL	-
	TEST_MODE in HS mode	STALL	STALL	-
	TEST_MODE in FS mode	STALL	STALL	-
ClearTTBuffer				
	In HS mode	STALL	STALL	-
	In FS mode	STALL	STALL	-
GetTTState **Note 1**				
	In HS mode	STALL	-	-
	In FS mode	STALL	STALL	-
ResetTT				
	In HS mode	STALL	STALL	-
	In FS mode	STALL	STALL	-
StopTT				
	In HS mode	STALL	STALL	-
	In FS mode	STALL	STALL	-
Other Class-specific Requests		STALL	STALL	-
Normal transaction				
Interrupt for Endpoint 1		-	-	STALL

Notes 1. The wLength field specifies the number of bytes to return. If the data (or internal state of TT) is longer than the wLength field, only wLength bytes of the data (or internal state of TT) are returned. If the data (or internal state of TT) is shorter than the wLength field, the device ends the control transfer by sending a short packet when more data is requested.

2. If the hub is not configured, the hub's response to GetHubDescriptor request is undefined in USB specification. The μPD720114 will return data for the GetHubDescriptor request even in default or address state. It will not decode wValue field for GetHubDescriptor request and will ignore that field.

3. When the downstream facing port is in *TEST_MODE*, the μPD720114 returns ACK handshake for another SetPortFeature (*TEST_MODE*), but it discards that request. When the downstream facing port is in *TEST_MODE*, the μPD720114 does not respond for SetFeature (*TEST_MODE*). When the port is not in Disable, Disconnect, or Suspend State, the μPD720114 returns STALL handshake for SetPortFeature (*TEST_MODE*).

Remarks 1. Asterisk (*) indicates that “Not Specified” or “undefined” is described in USB specification rev. 2.0.

2. The requests, which are defined in USB specification rev. 2.0, are undefined in full-speed mode. So, the μPD720114 will return STALL handshake for these requests when it is operating in full-speed mode.

3. When μPD720114’s upstream facing port is in *TEST_MODE*, the μPD720114 can not respond for any request.

4. In high-speed mode, 4 additional requests for Transaction translator are provided.

Request	Function
ClearTTBuffer	Clears the state of a Transaction Translator (TT) bulk/control buffer after it has been left in a busy state due to high-speed errors. After successful completion of this request, the buffer can again be used by the TT with high-speed split transaction for full/low-speed transactions to attached full-/low-speed device.
GetTTState	Returns Internal state of TT for debugging purposes after StopTT request is completed.
ResetTT	Returns the TT in hub to a known state.
StopTT	Stops the normal execution of the TT to retrieve internal state of TT via GetTTState request for debugging purposes.

4.4 Hub Status Field and Hub Change Field

The section describes the value returned for GetHubStatus request. These fields may be set by SetHubFeature request and cleared by ClearHubFeature request.

Table 4-1. Hub Status Field, *wHubStatus*

Bit	Description
0	**Local Power Source:** This indicates the condition of the local power supply. This is 0 when power supply for hub is stable. 0 = Local power supply good 1 = Local power supply lost (inactive)
1	**Over-current Indicator:** reporting on a hub basis 0 = No over-current condition currently exists. 1 = A hub over-current condition exists.
2 to 15	**Reserved** These bits return 0 when read.

Table 4-2. Hub Change Field, *wHubChange*

Bit	Description
0	**Local Power Status Change:** (C_HUB_LOCAL_POWER) 0 = No change has occurred to Local Power Status. 1 = Local Power Status has changed.
1	**Over-Current Indicator Change:** (C_HUB_OVER_CURRENT) This field indicates if a change has occurred in the Over-current indicator field in *wHubStatus*. 0 = No change has occurred to the Over-Current Indicator. 1 = Over-Current Indicator has changed.
2 to 15	**Reserved** These bits return 0 when read.

4.5 Port Status Field and Port Change Field

The section describes the value returned for GetPortStatus request. These fields may be set by SetPortFeature request and cleared by ClearPortFeature request.

Table 4-3. Port Status Field, *wPortStatus*

Bit	Description
0	**Current Connect Status:** (PORT_CONNECTION) 0 = No device is present. 1 = A device is present on this port.
1	**Port Enabled/Disabled:** (PORT_ENABLE) 0 = Port is disabled. 1 = Port is enabled.
2	**Suspend:** (PORT_SUSPEND) 0 = Not suspended. 1 = Suspended or resuming.
3	**Over-current Indicator:** reporting on a per-port basis (PORT_OVER_CURRENT) 0 = No over-current condition occurred on this port. 1 = An over-current condition occurred on this port.
4	**Reset:** (PORT_RESET) 0 = Reset signaling not asserted. 1 = Reset signaling asserted.
5 to 7	**Reserved** These bits return 0 when read.
8	**Port Power:** (PORT_POWER) 0 = This port is in the Powered-off state. 1 = This port is not in the Powered-off state.
9	**Low Speed Device Attached:** (PORT_LOW_SPEED) 0 = Full-speed or High-speed device attached to this port. (Determined by bit 10) 1 = Low-speed device attached to this port.
10	**Full or High Speed Device Attached:** (PORT_HIGH_SPEED) 0 = Full-speed device attached to this port. 1 = High-speed device attached to this port.
11	**Port Test Mode:** (PORT_TEST) 0 = This port is not in the Port Test Mode. 1 = This port is in Port Test Mode.
12	**Port Indicator Control:** (PORT_INDICATOR) 0 = Port indicator displays default colors. 1 = Port indicator displays software controlled color.
13 to 15	**Reserved** These bits return 0 when read.

Table 4-4. Port Change Field, *wPortChange*

Bit	Description
0	**Connect Status Change:** (C_PORT_CONNECTION) This field indicates if a change has occurred in the Current Connect Status field in *wPortStatus*. 0 = No change has occurred to Current Connect status. 1 = Current Connect status has changed.
1	**Port Enable/Disable Change:** (C_PORT_ENABLE) This field is set to one when a port is disabled because of a Port_Error condition.
2	**Suspend Change:** (C_PORT_SUSPEND) This field indicates a change in the host-visible suspend state of the attached device. It indicates the device has transitioned out of the Suspend state. This field is set only when the entire resume process has completed. 0 = No change. 1 = Resume complete.
3	**Over-Current Indicator Change:** (C_PORT_OVER_CURRENT) This field indicates if a change has occurred in the Over-current Indicator field in *wPortStatus*. 0 = No change has occurred to Over-Current Indicator. 1 = Over-Current Indicator has changed.
4	**Reset Change:** (C_PORT_RESET) This field is set when reset processing on this port is complete. 0 = No change. 1 = Reset complete.
5 to 15	**Reserved** These bits return 0 when read.

CHAPTER 5 HUB'S BEHAVIOR FUNCTION

5.1 Endpoint 1

The USB2.0 Hub defines the endpoint to notice the Status Change of port & hub. The Host system received port and hub status change notification through this endpoint.

μPD720114 notices the Status Change by using interrupt endpoint (Endpoint 1). If there is no change on hub or port status, the hub returns an NAK when the Status Change endpoint is polled. When any of status change bit is set, the hub responds with data, as shown in Table 5-1. Host system can check the cause of status change using the request shown in section 4.5 & section 4.6.

Table 5-1. Endpoint 1 Bitmap

Bit	Description
0	**Hub Change detected** 0: Not change status 1: Detect the hub change status
1	**Port 1 change detected** 0: Not change the port 1 status 1: Detect the port 1 change status
2	**Port 2 change detected** 0: Not change the port 2 status 1: Detect the port 2 change status
3	**Port 3 change detected** 0: Not change the port 3 status 1: Detect the port 3 change status
4	**Port 4 change detected** 0: Not change the port 4 status 1: Detect the port 4 change status
7:5	**Reserved**

5.2 PORT_INDICATOR

Each downstream facing port of a hub can support an optional status indicator. The presence of indicators for downstream facing ports is specified by bit 7 of the *wHubCharacteristics* field of the hub class descriptor.

The indicator uses two colors: Green and Amber. A combination of hardware and software control is used to inform the user about the current status of the port or the device attached to the port, and to guide the user through problem resolution. Colors and blinking are used to provide information to the user. A hub must automatically control the color of the indicator as specified in **Figure 5-1**.

Figure 5-1. Port Indicator State Diagram

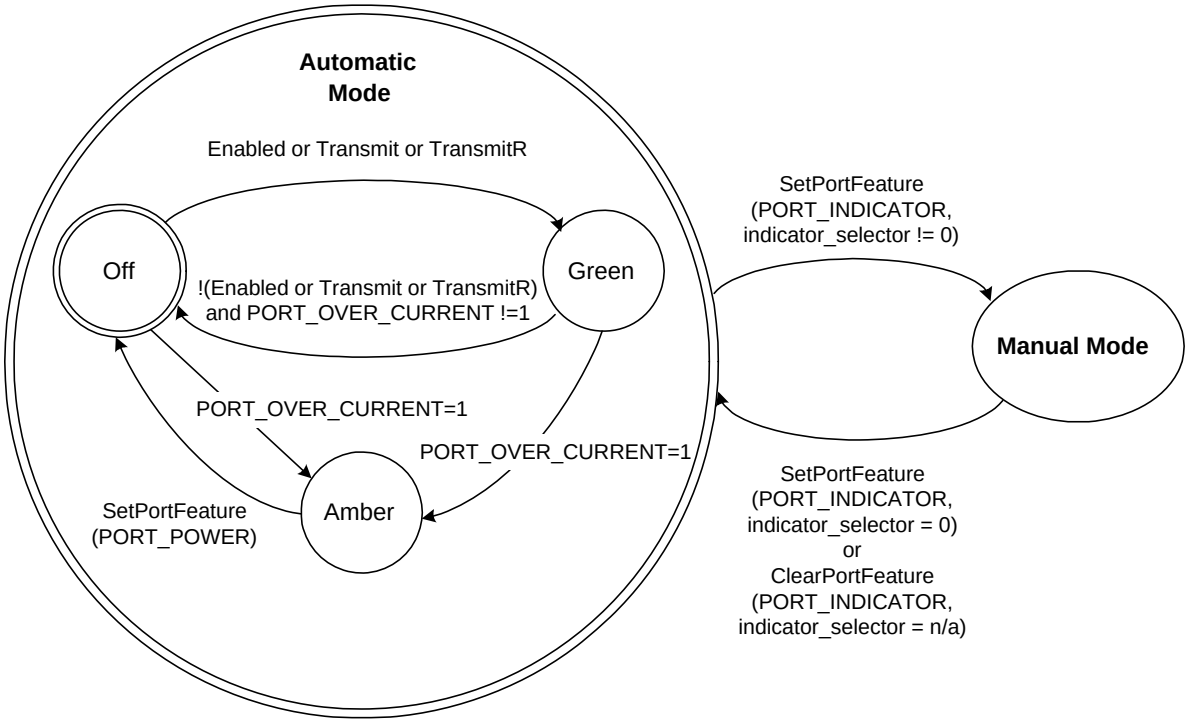

In **Automatic Mode**, Amber colored LED indicates to detect over-current condition on the port. And Green colored LED indicates that the port is in Enabled, Transmit, or TransmitR. In **Manual Mode**, the color of a port indicator (Amber, Green, or Off) is set by a system software's USB Hub class request.

The following table defines port state as understood by the user:

Table 5-2. Indicator Colors and Port Status

Color	Port State
Off	Suspended, Disconnected, Disabled, or Not Configured
Amber	Error condition
Green	Fully operational
Blinking Off/Green	Software Attention
Blinking Off/Amber	Hardware Attention
Blinking Green/Amber	Reserved

Each specific indicator mode is specified by the Port Indicator selected of SetPortFeature (PORT_INDICATOR) request. As shown in **Table 5-3**, if the Port Indicator Selector is not "0", Port Indicator will be put into **Manual Mode**. The GetPortStatus (PORT_INDICATOR) provides no standard mechanism to report a specific indicator mode, therefore system software must track which indicator mode was used.

Table 5-3. Port Indicator Selectors

Value	Indicator Mode Description
0h	Default as Automatic Mode
1h	Amber
2h	Green
3h	Off
4h to FFh	Reserved

For example, this feature should be used to require user intervention when host software detects following error conditions on a port.

- A high power device is plugged into a low power port.
- A defective device is plugged into a port (Babble conditions, excessive errors, etc.).
- An over-current condition occurs which causes software or hardware to set the indicator.

And many error conditions can be resolved if the user moves a device from one port to another that has the proper capabilities.

A typical scenario is when a user plugs a high power device into a bus-powered hub. If there is an available high power port, then the user can be directed to move the device from the low-power port to the high power port.

1. Host software would cycle the PORT_INDICATOR feature of the low power port to blink the indicator and display a message to the user to unplug the device from the port with the blinking indicator.
2. Using the C_PORT_CONNECTION status change feature host software can determine when the user physically removed the device from the low power port.
3. Host software would next issue a ClearPortFeature(PORT_INDICATOR) to the low power port (restoring the default color), begin cycling the PORT_INDICATOR of the high power port, and display a message telling the user to plug the device into to port with the blinking indicator.

4. Using the C_PORT_CONNECTION status change feature host software can determine when the user physically inserted the device onto the high power port.

Host software must cycle the PORT_INDICATOR feature to blink the current color at approximately 0.5 Hz rate with a 30 to 50 % duty cycle.

CHAPTER 6 HOW TO CONNECT TO EXTERNALDISCRETE COMPONENTS

6.1 USB Upstream Port Connection

Figure 6-1. USB Upstream Port Connection

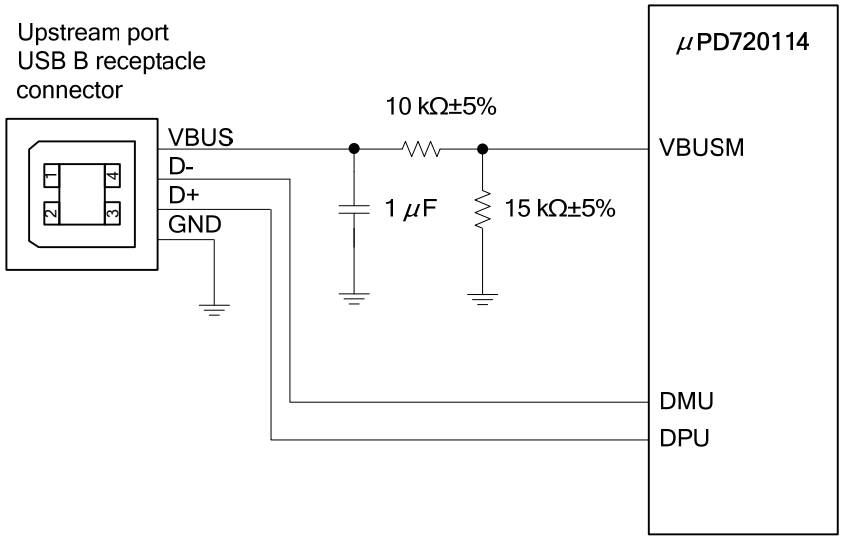

Note Rpu for DPU pin is internal.

Note The capacitance which is connected to VBUS of Up Stream Port needs to be less than 10 μF, which is defined in USB 2.0 Specification. For more detail, please see "**Section7.2.4.1 Inrush Current Limiting**" & "**Table7-7. DC Electrical Characteristics**" of Universal Serial Bus Specification Revision 2.0.

6.2 USB Downstream Port Connection

Figure 6-2. USB Downstream Port Connection

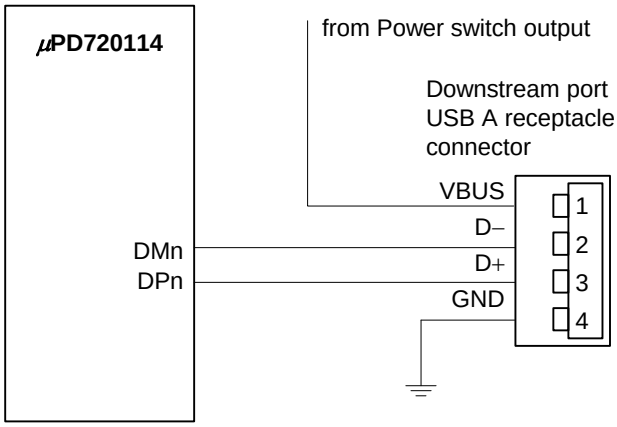

Note Rpd resistances for DP and DM pins are internal.

Note The capacitance which connected to VBUS of Down Stream Port needs to be more than 120 μF, which is defined in USB 2.0 specification. For more detail, please see "**Section7.2.4.1 Inrush Current Limiting**"& "**Table7-7. DC Electrical Characteristics**" of Universal Serial Bus Specification Revision 2.0.

6.3 Power Switching Connection

Figure 6-3. Individual Port Power Switching and Individual Port Over-current Protection

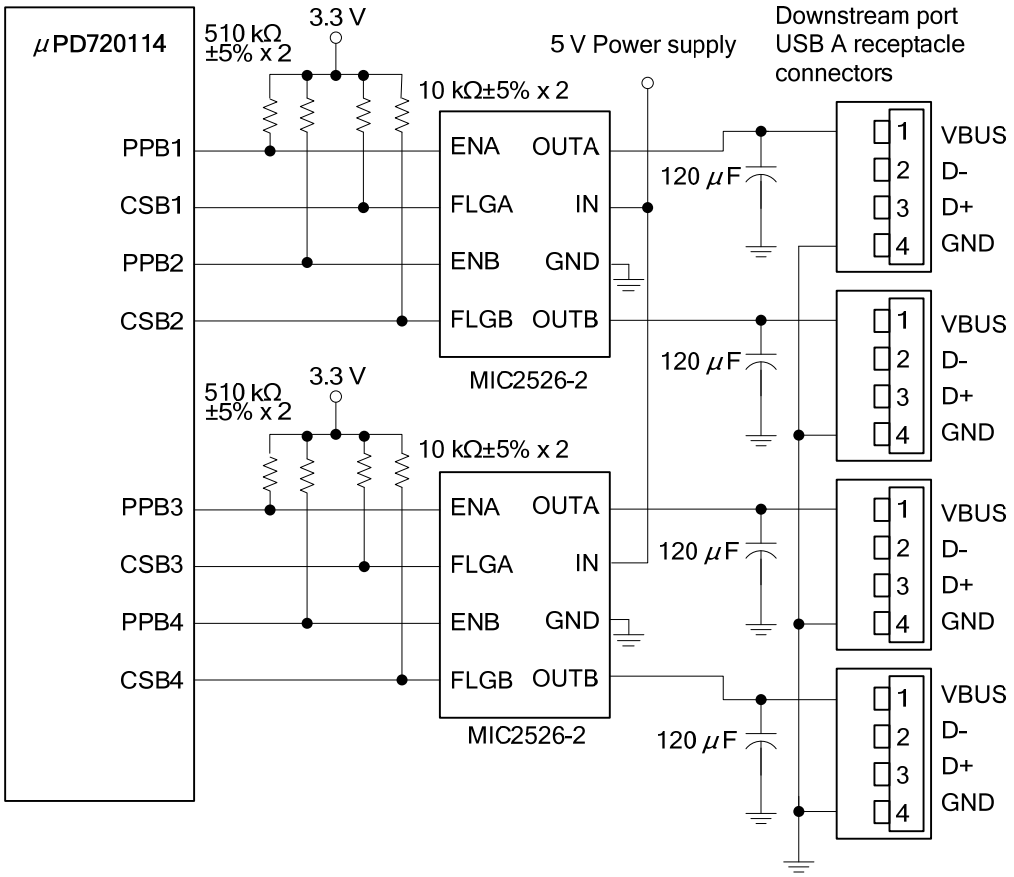

Remark When power switches are used, PPBx require a 510 kΩ pull-up resistor to V_{DD33} and CSBx require a 10 kΩ pull-up resistor to V_{DD33}.

Figure 6-4. Self-powered, Global Over-current Protection by Polymeric PTC

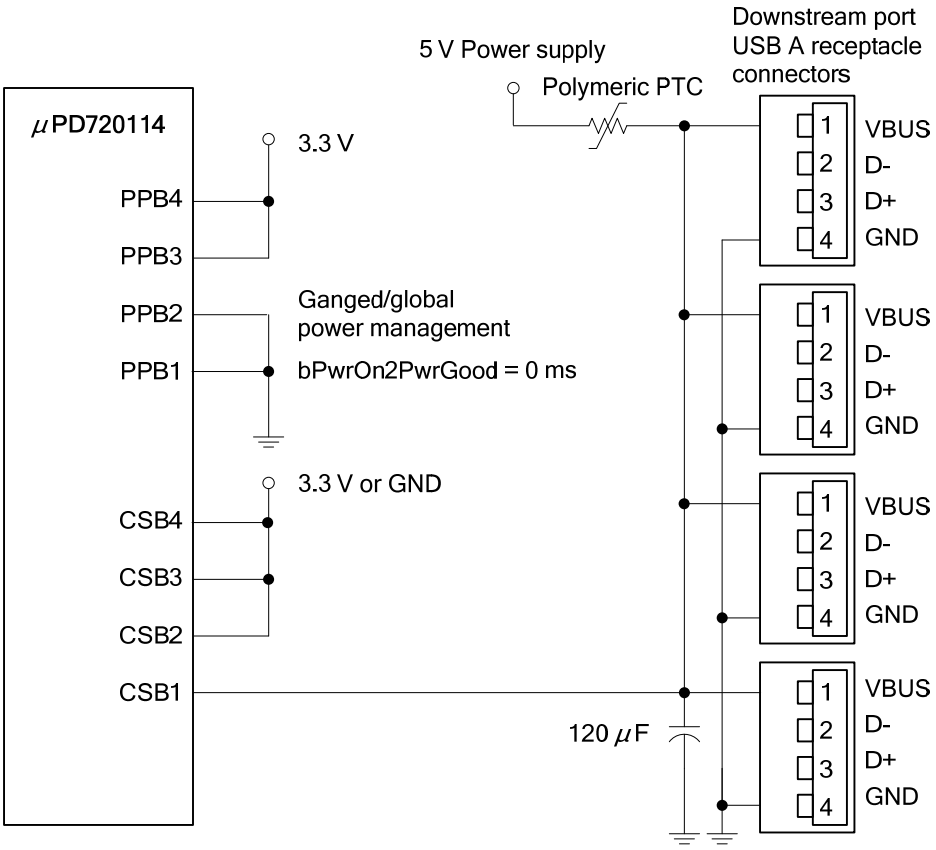

Remark When no power switches are used, set PPB1 = 0 (bPwrOn2PwrGood = 0) and PPB2 = 0 (Logical ganged power switching, global over-current protection). This complies with the USB Specification. CSB[4:2] are 3 V inputs and should connect to 3.3 V (not 5 V) or GND when using a PTC instead of power switches as shown.

6.4 LED Connection

Port_Indicator (LEDx, AMBER,GREEN) should be supported at default setting. At that case, each Amber colored LED should be connected from AMBER to LEDx with a series resistor, and each Green colored LED should be connected from GREEN to LEDx with a series resistor. AMBER pin should connect a 10 kΩ resistance to ground.

Figure 6-5. LED Connection

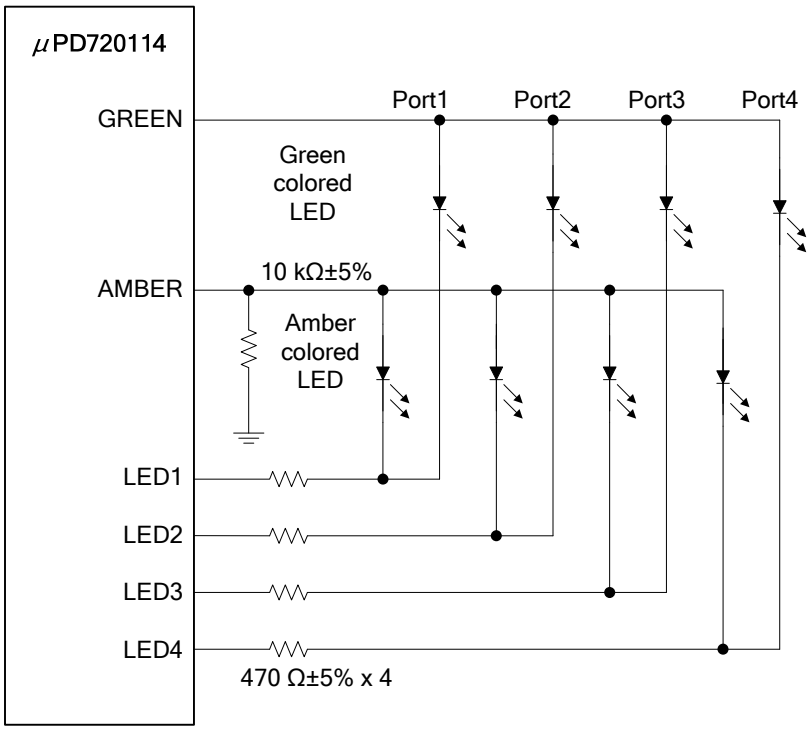

Remark Maximum load current of LEDx is 3 mA, and voltage between AMBER/GREEN and LEDx is 3.3 V nominal. Choose LED specification and series resistor value according to the electrical.

Remark AMBER pin doesn't use in gang mode.

6.5 Crystal Connection

Figure 6-6. Crystal Connection

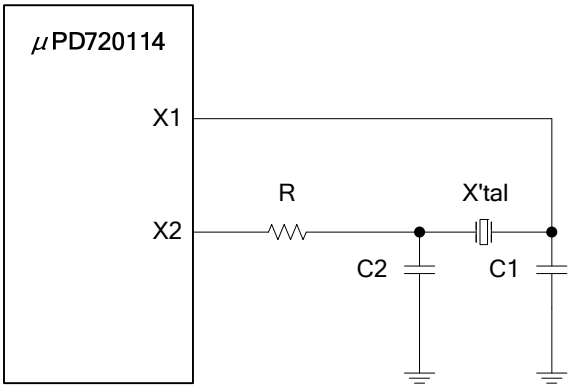

Figure 6-6 shows a 30 MHz fundamental crystal that is parallel loaded. In order to balance the frequency, negative resistance and the gain, the R, C1 and C2 should trim for the crystal. The following crystals are evaluated on our reference design board. **Table 6-1** shows the external parameters.

Table 6-1. External Parameters

Vender	X'tal	R	C1	C2
KDS	AT-49 30.000 MHz (C_L = 10 pF)	33 Ω	12 pF	12 pF
NDK	AT-41 30.000 MHz (C_L = 8 pF)	150 Ω	10 pF	10 pF

Remark KDS: DAISHINKU CORP.
NDK: NIHON DEMPA KOGYO CO., LTD.

In using these crystals, contact KDS or NDK to get the specification on external components to be used in conjunction with the crystal.

KDS's home page: http://www.kds.info/index_en.htm
NDK's home page: http://www.ndk.com/en/index.cfm

Caution When you use an oscillator circuit, please keep following points.

- **Keep the wiring length as short as possible.**
- **Do not cross the wiring with the other signal lines.**
- **Do not route the wring near a signal line through which a high fluctuating current flows.**
- **Always keep the ground point of the oscillator capacitor to the same potential as V_{SS}.**
- **Do not ground the capacitor to a ground pattern in which a high current flows.**

6.6 RREF and Internal Regulator Connection

- **48-pin plastic TQFP (Fine pitch) (7 × 7)**

Figure 6-7. RREF and Internal Regulator Connection

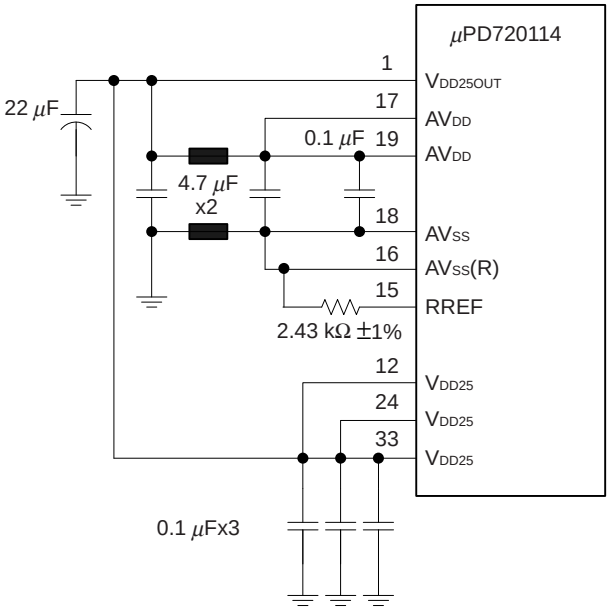

Caution **$V_{DD25OUT}$ must be routed to only V_{DD25} (and AV_{DD}). In case that $V_{DD25OUT}$ is also used for power supply of other ICs, this may cause unstable operation of the μPD720114.**

Remark The board layout should minimize the total path length from pin 15 through the resistor to pin 16 and connect to the source of AV_{SS} (quiet AV_{SS}). V_{DD25} is powered by $V_{DD25OUT}$ from internal regulator. It is not necessary to use external regulator for V_{DD25}.

- **40-pin plastic QFN (6 × 6)**

Figure 6-8. RREF and Internal Regulator Connection

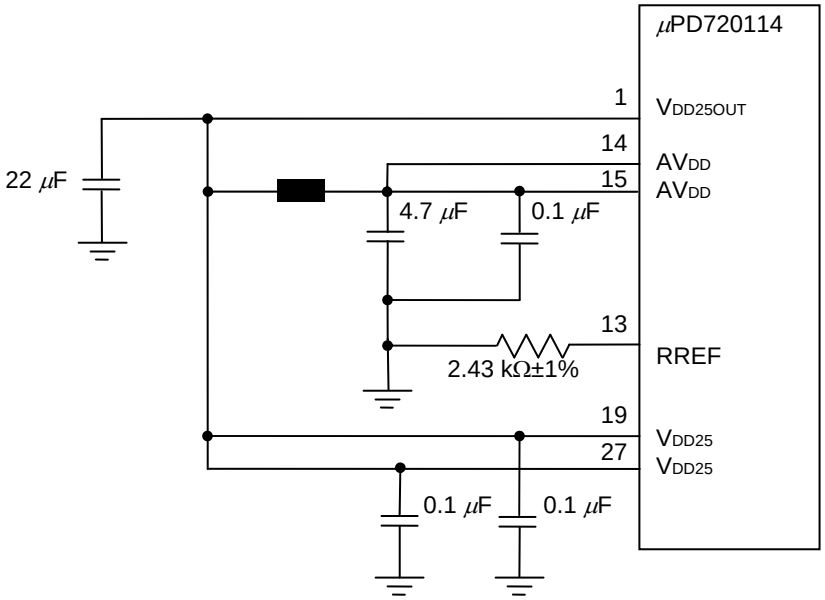

Caution **$V_{DD25OUT}$ must be routed to only V_{DD25} (and AV_{DD}). In case that $V_{DD25OUT}$ is also used for power supply of other ICs, this may cause unstable operation of the μPD720114.**

Remark The board layout should minimize the total path length from pin 13 through the resistor to quiet ground. V_{DD25} is powered by $V_{DD25OUT}$ from internal regulator. It is not necessary to use external regulator for V_{DD25}.

6.7 Handling Unused Pins

Hubs using the μPD720114 can be implemented with less than 4 downstream ports. If a hub design is implemented with less than 4 ports, only the lower numbered ports shall be used or accessible to the users. For example, if only 2 ports are used in the design, only ports 1 to 2 shall be used, and port 3 and 4 shall not be used or accessible to the users.

To implement a hub with less than 4 ports, connect the unused pins of unused ports as shown below (where x indicates the unused port number).

Pin	Direction	Connection Method
DPx	I/O	Tied to GND directly or though resistor
DMx	I/O	Tied to GND directly or though resistor
TEST	I	Tied to GND directly or though resistor
CSB[4:2]	I	Tied to 3.3 V or GND

CHAPTER 7 APPLICATION INFORMATION

7.1 4 Port Self-powered Individual Port Power Management Hub

Figure 7-1. 4 Port Self-powered Individual Port Power Management Hub with LED Indicator Diagram

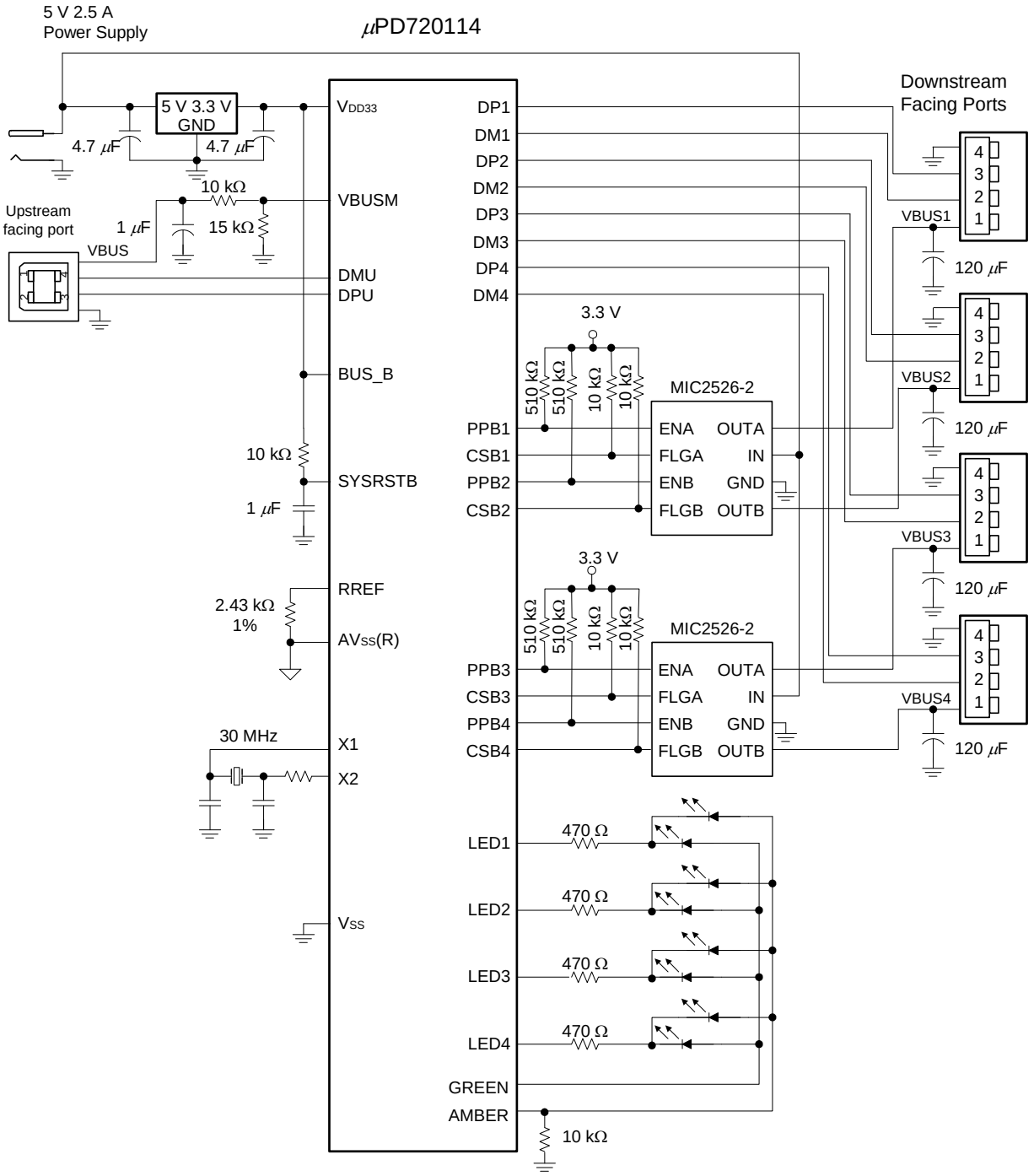

Remark PPB[4:1] should connect by 510 kΩ resistance to 3.3 V. CSB[4:1] should connect by 10 kΩ resistance to 3.3 V.

7.2 3 Port Bus/self-powered Individual Port Power Management Hub

Figure 7-2. 3 Port Bus/self-powered Individual Port Power Management Hub Diagram

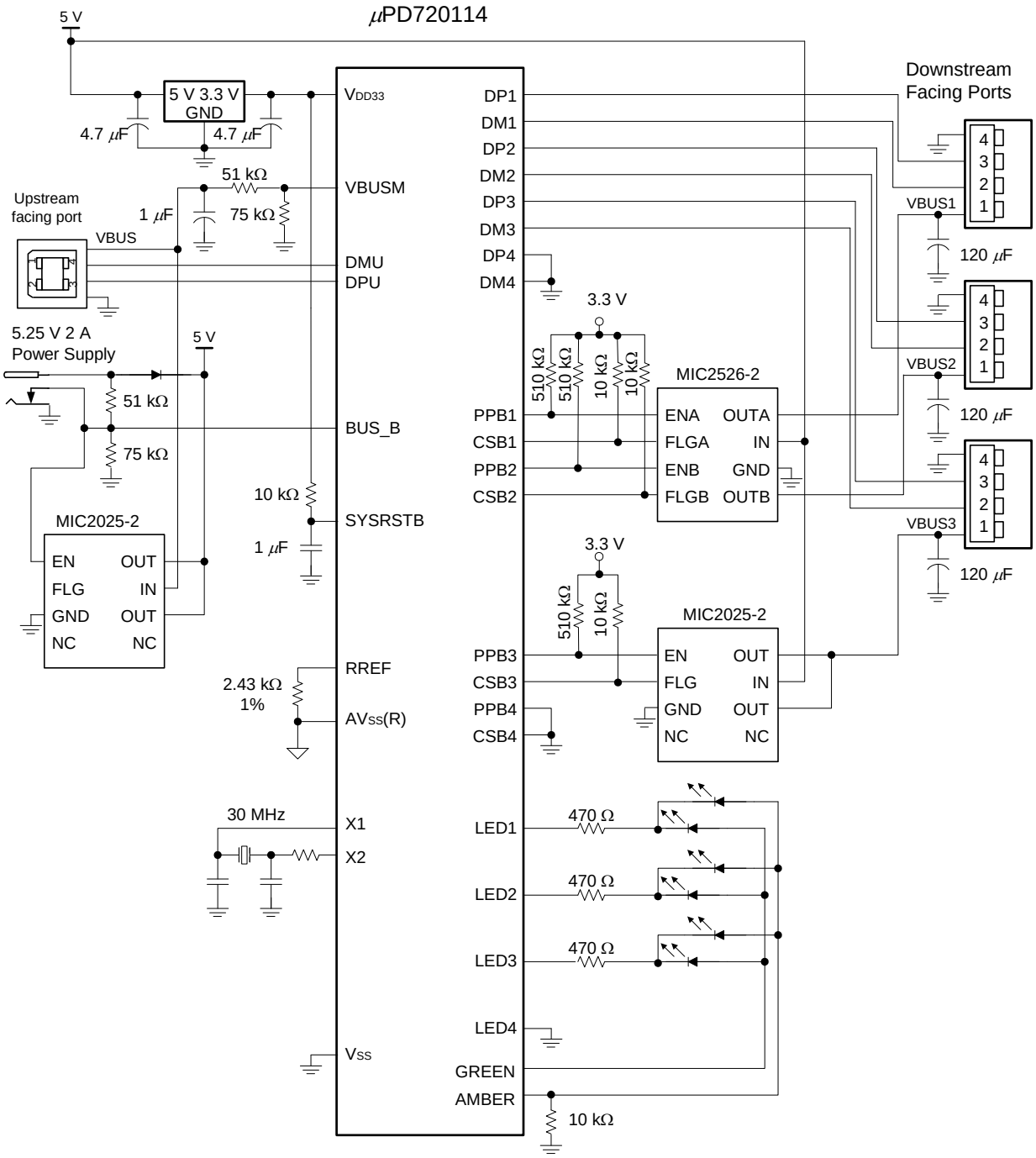

Remark PPB[3:1] should connect by 510 kΩ resistance to 3.3 V. CSB[3:1] should connect by 10 kΩ resistance to 3.3 V.

7.3 4 Port Self-powered Ganged Port Power Management Hub

Figure 7-3. 4 Port Self-powered Ganged Port Power Management Hub without LED Indicator Diagram

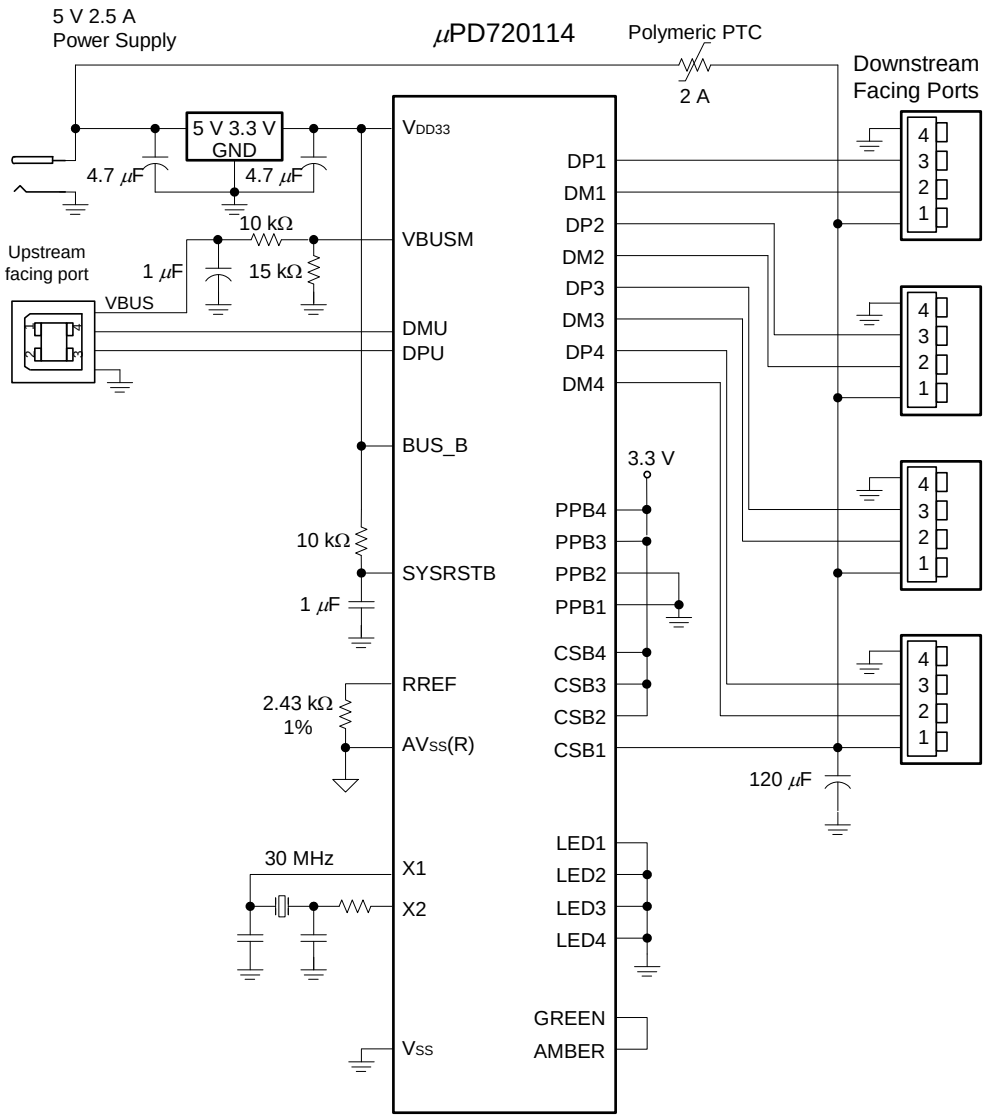

Remark PPB1, PPB2 should connect to low when no power switch used.

7.4 2 Port Hub with One Embedded Device

Figure 7-4. 2 Port Hub with Embedded Device Diagram

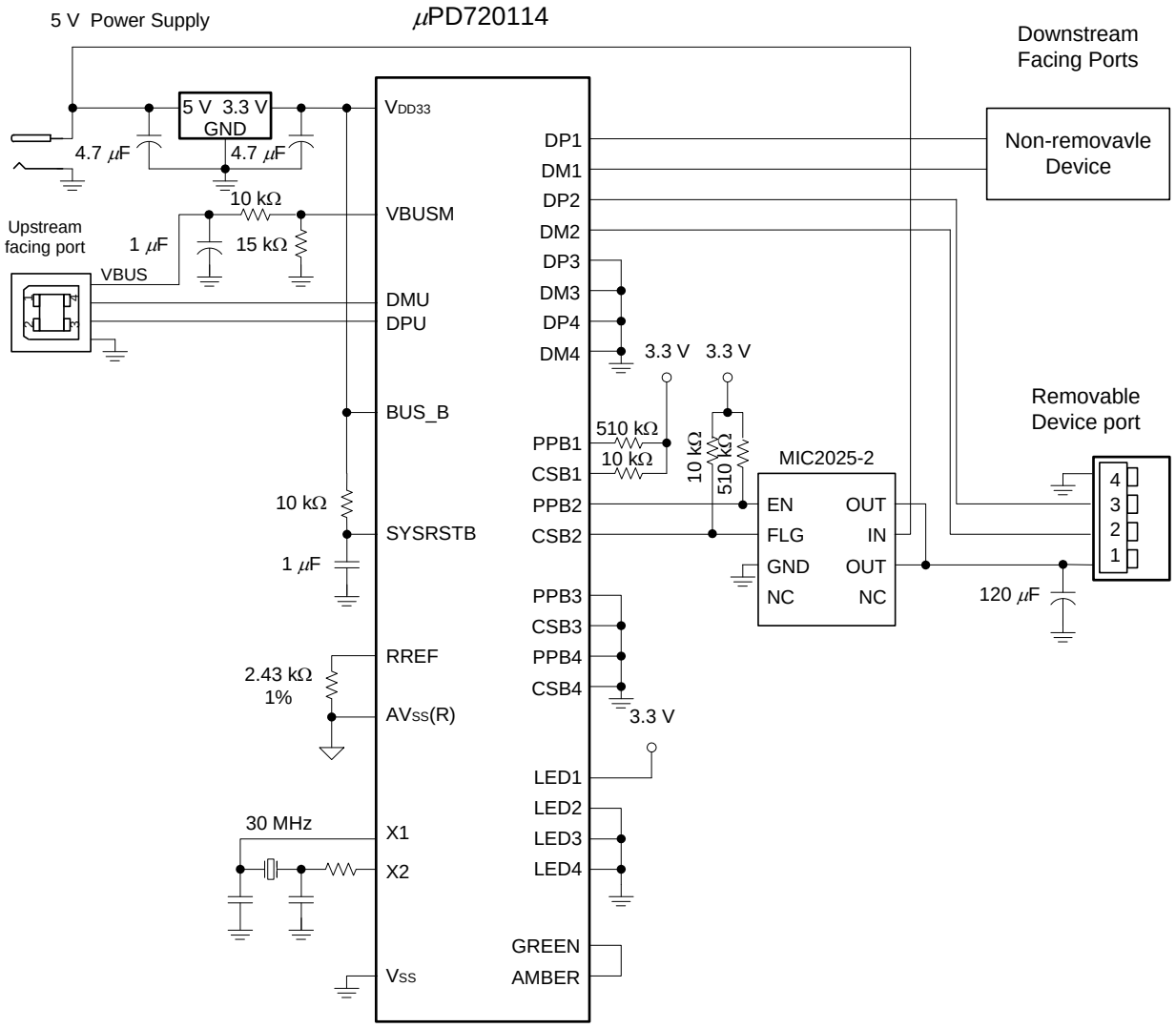

Remark PPB[2:1] should connect by 510 kΩ resistance to 3.3 V. CSB[2:1] should connect by 10 kΩ resistance to 3.3 V, and PPB[4:3] should connect to low.

μPD720114 User's Manual: Hardware

Publication Date: Sep 16, 2015

Published by: Renesas Electronics Corporation

SALES OFFICES Renesas Electronics Corporation http://www.renesas.com

Refer to "http://www.renesas.com/" for the latest and detailed information.

Renesas Electronics America Inc.
2801 Scott Boulevard Santa Clara, CA 95050-2549, U.S.A.
Tel: +1-408-588-6000, Fax: +1-408-588-6130

Renesas Electronics Canada Limited
9251 Yonge Street, Suite 8309 Richmond Hill, Ontario Canada L4C 9T3
Tel: +1-905-237-2004

Renesas Electronics Europe Limited
Dukes Meadow, Millboard Road, Bourne End, Buckinghamshire, SL8 5FH, U.K
Tel: +44-1628-585-100, Fax: +44-1628-585-900

Renesas Electronics Europe GmbH
Arcadiastrasse 10, 40472 Düsseldorf, Germany
Tel: +49-211-6503-0, Fax: +49-211-6503-1327

Renesas Electronics (China) Co., Ltd.
Room 1709, Quantum Plaza, No.27 ZhiChunLu Haidian District, Beijing 100191, P.R.China
Tel: +86-10-8235-1155, Fax: +86-10-8235-7679

Renesas Electronics (Shanghai) Co., Ltd.
Unit 301, Tower A, Central Towers, 555 Langao Road, Putuo District, Shanghai, P. R. China 200333
Tel: +86-21-2226-0888, Fax: +86-21-2226-0999

Renesas Electronics Hong Kong Limited
Unit 1601-1611, 16/F., Tower 2, Grand Century Place, 193 Prince Edward Road West, Mongkok, Kowloon, Hong Kong
Tel: +852-2265-6688, Fax: +852 2886-9022

Renesas Electronics Taiwan Co., Ltd.
13F, No. 363, Fu Shing North Road, Taipei 10543, Taiwan
Tel: +886-2-8175-9600, Fax: +886 2-8175-9670

Renesas Electronics Singapore Pte. Ltd.
80 Bendemeer Road, Unit #06-02 Hyflux Innovation Centre, Singapore 339949
Tel: +65-6213-0200, Fax: +65-6213-0300

Renesas Electronics Malaysia Sdn.Bhd.
Unit 1207, Block B, Menara Amcorp, Amcorp Trade Centre, No. 18, Jln Persiaran Barat, 46050 Petaling Jaya, Selangor Darul Ehsan, Malaysia
Tel: +60-3-7955-9390, Fax: +60-3-7955-9510

Renesas Electronics India Pvt. Ltd.
No.777C, 100 Feet Road, HAL Ⅱ Stage, Indiranagar, Bangalore, India
Tel: +91-80-67208700, Fax: +91-80-67208777

Renesas Electronics Korea Co., Ltd.
12F., 234 Teheran-ro, Gangnam-Gu, Seoul, 135-080, Korea
Tel: +82-2-558-3737, Fax: +82-2-558-5141

© 2015 Renesas Electronics Corporation. All rights reserved.
Colophon 4.0

μPD720114

Renesas Electronics Corporation

R19UH0079EJ0100