Features

- V_{CC} pin：max transient supply voltage 40V
- Operating voltage range：4.5V to 28V
- Load current limitation
- Output short-circuit protection
- Standby current <1.0μA
- On-state resistance Typ=140mΩ (per Ch)
- Thermal shutdown indication
- OFF-state open-load detection
- Overvoltage clamp
- Undervoltage protection
- Multiplexed analog feedback of: load current with high precision proportional current mirror, V_{CC} supply voltage and T_{CHIP} device temperature
- RoHS compliant and lead free

Application

- All types of automotive resistive, inductive and capacitive loads
- Specially intended for automotive signal lamps

General Description

- WSD7140AD is double channel high-side drivers with current sense analog feedback for automotive applications, the devices are designed to drive 12 V automotive grounded loads through a 3 V and 5 V.
- WSD7140AD integrates advanced protective functions such as load current limitation, overload active management by power limitation and overtemperature shutdown with configurable latch-off. A Fault pin unlatches the output in case of fault or disables the latch-off functionality.
- A dedicated multifunction multiplexed analog output pin delivers sophisticated diagnostic functions including high precision proportional load current sense, supply voltage feedback and chip temperature sense, in addition to the detection of overload and short circuit to ground, short to V_{CC} and OFF-state open-load.
- A sense enable pin allows OFF-state diagnosis to be disabled during the module low power mode as well as external sense resistor sharing among similar devices.
- WSD7140AD is available in DFN5×6-16L package.
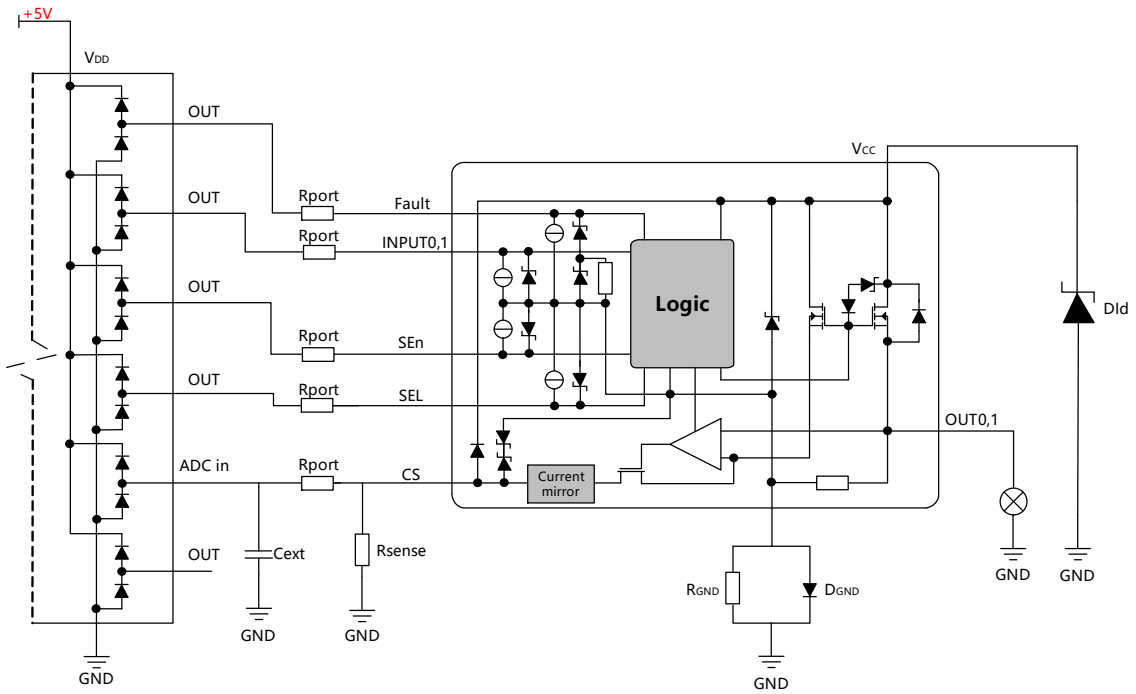
Typical Application Circuit