To our customers,

Old Company Name in Catalogs and Other Documents

On April 1st, 2010, NEC Electronics Corporation merged with Renesas Technology Corporation, and Renesas Electronics Corporation took over all the business of both companies. Therefore, although the old company name remains in this document, it is a valid Renesas Electronics document. We appreciate your understanding.

Renesas Electronics website: http://www.renesas.com

April 1st, 2010
Renesas Electronics Corporation

Issued by: Renesas Electronics Corporation (http://www.renesas.com)

Send any inquiries to http://www.renesas.com/inquiry.

RENESAS

Notice

1. All information included in this document is current as of the date this document is issued. Such information, however, is subject to change without any prior notice. Before purchasing or using any Renesas Electronics products listed herein, please confirm the latest product information with a Renesas Electronics sales office. Also, please pay regular and careful attention to additional and different information to be disclosed by Renesas Electronics such as that disclosed through our website.
2. Renesas Electronics does not assume any liability for infringement of patents, copyrights, or other intellectual property rights of third parties by or arising from the use of Renesas Electronics products or technical information described in this document. No license, express, implied or otherwise, is granted hereby under any patents, copyrights or other intellectual property rights of Renesas Electronics or others.
3. You should not alter, modify, copy, or otherwise misappropriate any Renesas Electronics product, whether in whole or in part.
4. Descriptions of circuits, software and other related information in this document are provided only to illustrate the operation of semiconductor products and application examples. You are fully responsible for the incorporation of these circuits, software, and information in the design of your equipment. Renesas Electronics assumes no responsibility for any losses incurred by you or third parties arising from the use of these circuits, software, or information.
5. When exporting the products or technology described in this document, you should comply with the applicable export control laws and regulations and follow the procedures required by such laws and regulations. You should not use Renesas Electronics products or the technology described in this document for any purpose relating to military applications or use by the military, including but not limited to the development of weapons of mass destruction. Renesas Electronics products and technology may not be used for or incorporated into any products or systems whose manufacture, use, or sale is prohibited under any applicable domestic or foreign laws or regulations.
6. Renesas Electronics has used reasonable care in preparing the information included in this document, but Renesas Electronics does not warrant that such information is error free. Renesas Electronics assumes no liability whatsoever for any damages incurred by you resulting from errors in or omissions from the information included herein.
7. Renesas Electronics products are classified according to the following three quality grades: "Standard", "High Quality", and "Specific". The recommended applications for each Renesas Electronics product depends on the product's quality grade, as indicated below. You must check the quality grade of each Renesas Electronics product before using it in a particular application. You may not use any Renesas Electronics product for any application categorized as "Specific" without the prior written consent of Renesas Electronics. Further, you may not use any Renesas Electronics product for any application for which it is not intended without the prior written consent of Renesas Electronics. Renesas Electronics shall not be in any way liable for any damages or losses incurred by you or third parties arising from the use of any Renesas Electronics product for an application categorized as "Specific" or for which the product is not intended where you have failed to obtain the prior written consent of Renesas Electronics. The quality grade of each Renesas Electronics product is "Standard" unless otherwise expressly specified in a Renesas Electronics data sheets or data books, etc.

   "Standard": Computers; office equipment; communications equipment; test and measurement equipment; audio and visual equipment; home electronic appliances; machine tools; personal electronic equipment; and industrial robots.

   "High Quality": Transportation equipment (automobiles, trains, ships, etc.); traffic control systems; anti-disaster systems; anti-crime systems; safety equipment; and medical equipment not specifically designed for life support.

   "Specific": Aircraft; aerospace equipment; submersible repeaters; nuclear reactor control systems; medical equipment or systems for life support (e.g. artificial life support devices or systems), surgical implantations, or healthcare intervention (e.g. excision, etc.), and any other applications or purposes that pose a direct threat to human life.
8. You should use the Renesas Electronics products described in this document within the range specified by Renesas Electronics, especially with respect to the maximum rating, operating supply voltage range, movement power voltage range, heat radiation characteristics, installation and other product characteristics. Renesas Electronics shall have no liability for malfunctions or damages arising out of the use of Renesas Electronics products beyond such specified ranges.
9. Although Renesas Electronics endeavors to improve the quality and reliability of its products, semiconductor products have specific characteristics such as the occurrence of failure at a certain rate and malfunctions under certain use conditions. Further, Renesas Electronics products are not subject to radiation resistance design. Please be sure to implement safety measures to guard them against the possibility of physical injury, and injury or damage caused by fire in the event of the failure of a Renesas Electronics product, such as safety design for hardware and software including but not limited to redundancy, fire control and malfunction prevention, appropriate treatment for aging degradation or any other appropriate measures. Because the evaluation of microcomputer software alone is very difficult, please evaluate the safety of the final products or system manufactured by you.
10. Please contact a Renesas Electronics sales office for details as to environmental matters such as the environmental compatibility of each Renesas Electronics product. Please use Renesas Electronics products in compliance with all applicable laws and regulations that regulate the inclusion or use of controlled substances, including without limitation, the EU RoHS Directive. Renesas Electronics assumes no liability for damages or losses occurring as a result of your noncompliance with applicable laws and regulations.
11. This document may not be reproduced or duplicated, in any form, in whole or in part, without prior written consent of Renesas Electronics.
12. Please contact a Renesas Electronics sales office if you have any questions regarding the information contained in this document or Renesas Electronics products, or if you have any other inquiries.

(Note 1) "Renesas Electronics" as used in this document means Renesas Electronics Corporation and also includes its majority-owned subsidiaries.

(Note 2) "Renesas Electronics product(s)" means any product developed or manufactured by or for Renesas Electronics.

User's Manual

32

The revision list can be viewed directly by clicking the title page. The revision list summarizes the locations of revisions and additions. Details should always be checked by referring to the relevant text.

SH7014, SH7016, SH7017F-ZTAT™

Hardware Manual

Renesas 32-Bit RISC Microcomputer SuperH™ RISC engine family/ SH7010 Series

SH7014	HD6417014F28
	HD6417014RF28
SH7016	HD6437016F28
SH7017	HD64F7017F28

Renesas Electronics
www.renesas.com

Rev.2.00 2007.09

Notes regarding these materials

1. This document is provided for reference purposes only so that Renesas customers may select the appropriate Renesas products for their use. Renesas neither makes warranties or representations with respect to the accuracy or completeness of the information contained in this document nor grants any license to any intellectual property rights or any other rights of Renesas or any third party with respect to the information in this document.
2. Renesas shall have no liability for damages or infringement of any intellectual property or other rights arising out of the use of any information in this document, including, but not limited to, product data, diagrams, charts, programs, algorithms, and application circuit examples.
3. You should not use the products or the technology described in this document for the purpose of military applications such as the development of weapons of mass destruction or for the purpose of any other military use. When exporting the products or technology described herein, you should follow the applicable export control laws and regulations, and procedures required by such laws and regulations.
4. All information included in this document such as product data, diagrams, charts, programs, algorithms, and application circuit examples, is current as of the date this document is issued. Such information, however, is subject to change without any prior notice. Before purchasing or using any Renesas products listed in this document, please confirm the latest product information with a Renesas sales office. Also, please pay regular and careful attention to additional and different information to be disclosed by Renesas such as that disclosed through our website. (http://www.renesas.com)
5. Renesas has used reasonable care in compiling the information included in this document, but Renesas assumes no liability whatsoever for any damages incurred as a result of errors or omissions in the information included in this document.
6. When using or otherwise relying on the information in this document, you should evaluate the information in light of the total system before deciding about the applicability of such information to the intended application. Renesas makes no representations, warranties or guaranties regarding the suitability of its products for any particular application and specifically disclaims any liability arising out of the application and use of the information in this document or Renesas products.
7. With the exception of products specified by Renesas as suitable for automobile applications, Renesas products are not designed, manufactured or tested for applications or otherwise in systems the failure or malfunction of which may cause a direct threat to human life or create a risk of human injury or which require especially high quality and reliability such as safety systems, or equipment or systems for transportation and traffic, healthcare, combustion control, aerospace and aeronautics, nuclear power, or undersea communication transmission. If you are considering the use of our products for such purposes, please contact a Renesas sales office beforehand. Renesas shall have no liability for damages arising out of the uses set forth above.
8. Notwithstanding the preceding paragraph, you should not use Renesas products for the purposes listed below:
   (1) artificial life support devices or systems
   (2) surgical implantations
   (3) healthcare intervention (e.g., excision, administration of medication, etc.)
   (4) any other purposes that pose a direct threat to human life
   Renesas shall have no liability for damages arising out of the uses set forth in the above and purchasers who elect to use Renesas products in any of the foregoing applications shall indemnify and hold harmless Renesas Technology Corp., its affiliated companies and their officers, directors, and employees against any and all damages arising out of such applications.
9. You should use the products described herein within the range specified by Renesas, especially with respect to the maximum rating, operating supply voltage range, movement power voltage range, heat radiation characteristics, installation and other product characteristics. Renesas shall have no liability for malfunctions or damages arising out of the use of Renesas products beyond such specified ranges.
10. Although Renesas endeavors to improve the quality and reliability of its products, IC products have specific characteristics such as the occurrence of failure at a certain rate and malfunctions under certain use conditions. Please be sure to implement safety measures to guard against the possibility of physical injury, and injury or damage caused by fire in the event of the failure of a Renesas product, such as safety design for hardware and software including but not limited to redundancy, fire control and malfunction prevention, appropriate treatment for aging degradation or any other applicable measures. Among others, since the evaluation of microcomputer software alone is very difficult, please evaluate the safety of the final products or system manufactured by you.
11. In case Renesas products listed in this document are detached from the products to which the Renesas products are attached or affixed, the risk of accident such as swallowing by infants and small children is very high. You should implement safety measures so that Renesas products may not be easily detached from your products. Renesas shall have no liability for damages arising out of such detachment.
12. This document may not be reproduced or duplicated, in any form, in whole or in part, without prior written approval from Renesas.
13. Please contact a Renesas sales office if you have any questions regarding the information contained in this document, Renesas semiconductor products, or if you have any other inquiries.

General Precautions in the Handling of MPU/MCU Products

The following usage notes are applicable to all MPU/MCU products from Renesas. For detailed usage notes on the products covered by this manual, refer to the relevant sections of the manual. If the descriptions under General Precautions in the Handling of MPU/MCU Products and in the body of the manual differ from each other, the description in the body of the manual takes precedence.

1. Handling of Unused Pins

   Handle unused pins in accord with the directions given under Handling of Unused Pins in the manual.

   — The input pins of CMOS products are generally in the high-impedance state. In operation with an unused pin in the open-circuit state, extra electromagnetic noise is induced in the vicinity of LSI, an associated shoot-through current flows internally, and malfunctions may occur due to the false recognition of the pin state as an input signal. Unused pins should be handled as described under Handling of Unused Pins in the manual.

2. Processing at Power-on

   The state of the product is undefined at the moment when power is supplied.

   — The states of internal circuits in the LSI are indeterminate and the states of register settings and pins are undefined at the moment when power is supplied.

     In a finished product where the reset signal is applied to the external reset pin, the states of pins are not guaranteed from the moment when power is supplied until the reset process is completed.

     In a similar way, the states of pins in a product that is reset by an on-chip power-on reset function are not guaranteed from the moment when power is supplied until the power reaches the level at which resetting has been specified.

3. Prohibition of Access to Reserved Addresses

   Access to reserved addresses is prohibited.

   — The reserved addresses are provided for the possible future expansion of functions. Do not access these addresses; the correct operation of LSI is not guaranteed if they are accessed.

4. Clock Signals

   After applying a reset, only release the reset line after the operating clock signal has become stable. When switching the clock signal during program execution, wait until the target clock signal has stabilized.

   — When the clock signal is generated with an external resonator (or from an external oscillator) during a reset, ensure that the reset line is only released after full stabilization of the clock signal. Moreover, when switching to a clock signal produced with an external resonator (or by an external oscillator) while program execution is in progress, wait until the target clock signal is stable.

5. Differences between Products

   Before changing from one product to another, i.e. to one with a different type number, confirm that the change will not lead to problems.

   — The characteristics of MPU/MCU in the same group but having different type numbers may differ because of the differences in internal memory capacity and layout pattern. When changing to products of different type numbers, implement a system-evaluation test for each of the products.

Preface

The SH7014/16/17 CMOS single-chip microprocessors integrate a Renesas Technology-original architecture, high-speed CPU with peripheral functions required for system configuration.

The CPU has a RISC-type instruction set. Most instructions can be executed in one clock cycle, which greatly improves instruction execution speed. In addition, the 32-bit internal-bus architecture enhances data processing power. With this CPU, it has become possible to assemble low cost, high performance/high-functioning systems, even for applications that were previously impossible with microprocessors, such as real-time control, which demands high speeds. In particular, this LSI has a 1-kbyte on-chip cache, which allows an improvement in CPU performance during external memory access.

In addition, this LSI includes on-chip peripheral functions necessary for system configuration, such as large-capacity ROM (except the SH7014, which is ROMless) and RAM, timers, a serial communication interface (SCI), an A/D converter, an interrupt controller (INTC), and I/O ports. Memory or peripheral LSIs can be connected efficiently with an external memory access support function. This greatly reduces system cost.

This LSI has an F-ZTAT™ version with on-chip flash memory and a mask ROM version. These versions enable users to respond quickly and flexibly to changing application specifications, growing production volumes, and other conditions.

This hardware manual covers the SH7014/16/17/. For a detailed description of instructions, refer to the programming manual.

Related Manuals

SH7014/16/17 instruction execution: *SH-1/SH-2/SH-DSP Software Manual*

For information on development systems, please contact a Renesas Technology sales representative.

Main Revisions for This Edition

Item	Page	Revision (See Manual for Details)
All	—	Company name and brand names amended (Before) Hitachi, Ltd. → (After) Renesas Technology Corp.
		Description of DTC deleted
1.2 Block Diagram Figure 1.1 Block Diagram of the SH7014	6	Figure amended 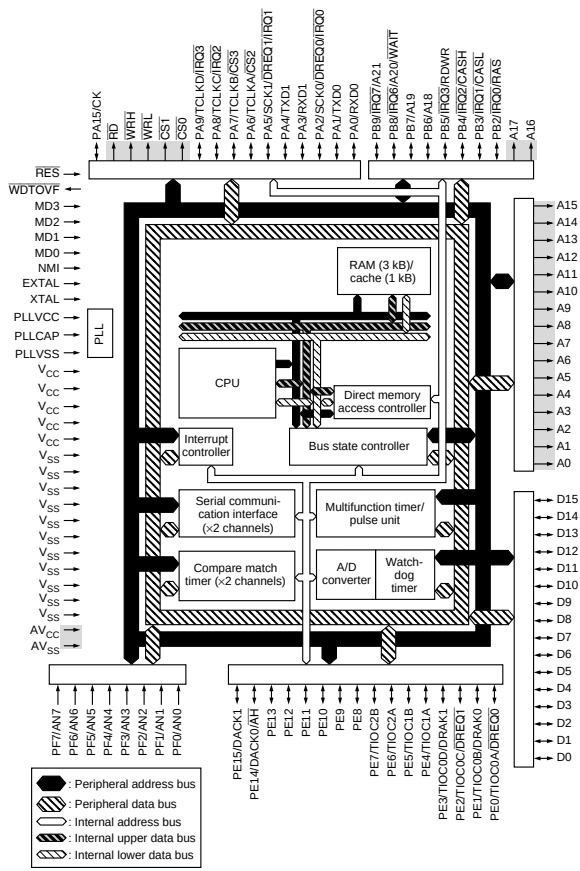 	
Figure 1.2 Block Diagram of the SH7016, SH7017	7	Note amended Note: * V_{CC} in the SH7016, FWP in the SH7017 (except FWE pin in the programmer mode).

Item	Page	Revision (See Manual for Details)
1.3.1 Pin Arrangement Figure 1.4 SH7016, SH7017 Pin Arrangement (FP-112 Top View)	9	Note amended Note: * V_{CC} in the SH7016, FWP in the SH7017 (except FWE pin in the programmer mode).
5.3.1 Address Error Sources Table 5.5 Bus Cycles and Address Errors	64	Title added and table amended

Bus Cycle			
Type	Bus Master	Bus Cycle Description	Address Errors
Instruction fetch	CPU	Instruction fetched from even address	None (normal)
		Instruction fetched from odd address	Address error occurs
		Instruction fetched from other than on-chip peripheral module space*	None (normal)
		Instruction fetched from on-chip peripheral module space*	Address error occurs
		Instruction fetched from external memory space when in single chip mode	Address error occurs

5.4.1 Interrupt Sources	65	Title added and description amended Table 5.6 shows the sources that start up interrupt exception processing. These are divided into NMI, IRQ and on-chip peripheral modules.
6.3.1 Interrupt Priority Registers A to H (IPRA to IPRH)	82	Description amended IPRA to IPRH are initialized to H'0000 by a power-on reset . They are not initialized in standby mode.
8.1.3 Pin Configuration Table 8.1 Pin Configuration	103	Table amended

Signal	I/O	Description
$\overline{WRH}$	O	Strobe that indicates a write cycle to the higher byte (D15 to D8) for ordinary space/multiplex I/O. Also output during DRAM access.
$\overline{WRL}$	O	Strobe that indicates a write cycle to the lower byte (D7 to D0) for ordinary space/multiplex I/O. Also output during DRAM access.

8.1.5 Address Map Table 8.3 Address Map • In on-chip ROM enabled mode	105	Table amdended Addresss H'00000000 to H'0001FFF*4
8.2.1 Bus Control Register 1 (BCR1) Bit 0—CS0 Space Size Specification (A0SZ)	108	Note added Note: A0SZ is effective only in on-chip ROM effective mode. In on-chip ROM ineffective mode, the CS0 space bus size is specified by the mode pin.

Item	Page	Revision (See Manual for Details)
8.2.5 DRAM Area Control Register (DCR)	115	Description amended DCR is a 16-bit read/write register that selects the number of waits, operation mode, number of address multiplex shifts and the like for DRAM control. After a power-on reset, write the initial values to the bits in DCR and do not change the values afterward. Do not perform any DRAM space accesses before DCR initial settings are completed.
9.1.1 Features	147	Description amended • Transfer requests: There are three DMAC transfer activation requests, as indicated below. — External request: From two $\overline{\text{DREQ}}$ pins. DREQ can be detected either by falling edge or by low level. These can be received by all channels.
9.2.3 DMA Transfer Count Registers 0, 1 (DMATCR0, DMATCR1)	153	Description amended … Specifying a H'000001 gives a transfer count of 1, while H'000000 gives the maximum setting, 65,536 transfers. While DMAC is in operation, the number of transfers to be performed is indicated. The initial value after power-on resets or in software standby mode is undefined. Upper sixteen bits of this register are read as 0 and the write value should always be 0.
9.3.5 Number of Bus Cycle States and $\overline{\text{DREQ}}$ Pin Sample Timing Cycle Steal Mode Operations: Figure 9.12 Cycle Steal, Single Address and Level Detection (Normal Operation)	176	Note added Note: With cycle-steal and single address operation, sampling timing is the same whether $\overline{\text{DREQ}}$ detection is by level or by edge.
Burst Mode, Single Address, and Edge Detection:	185	Description amended …During this period, data is undefined, and DACK is not output. Nor is the number of DMAC transfers counted. The actual DMAC transfer begins after one dummy bus cycle output. Thereafter, DMAC transfer continues until the data transfer count set in the DMATCR has ended. ...

Item	Page	Revision (See Manual for Details)
9.3.6 DMA Transfer Ending Conditions Conditions for Ending All Channels Simultaneously:	187	Description amended When the processing of a one unit transfer is complete. In a dual address mode direct address transfer, even if an address error occurs or the NMI flag is set during read processing, the transfer will not be halted until after completion of the following write processing. In such a case, SAR, DAR, and DMATCR values are updated.
9.4.2 Example of DMA Transfer between External RAM and External Device with DACK	189	Description amended In this example, an external request, single address mode transfer with external memory as the transfer source and an external device with DACK as the transfer destination is executed using DMAC channel 1.
10.1.1 Features	191	Description amended — PWM mode: PWM output can be provided with any duty cycle. When combined with the counter synchronizing function, up to seven-phase PWM output is enabled (with channels 0 to 2 set to PWM mode 2 and channel 0 synchronized with the TGR0A register (channels 0 to 2 phase output: 3, 2, 2)).
10.1.4 Register Configuration Table 10.3 Register Configuration	198	Notes amended Notes: Do not access empty addresses. 1. 16-bit registers (TCNT, TGR) cannot be read or written in 8-bit units. 2. Write 0 to clear flags.
10.2.4 Timer Interrupt Enable Register (TIER) Bit 5—Underflow Interrupt Enable (TCIEU)	215	Description amended This bit is reserved for channel 0. It always reads as 0. The write value should always be 0.
Bit 3—TGR Interrupt Enable D (TGIED):	216	Description amended This bit is reserved for channels 1 and 2. It always reads as 0. The write value should always be 0.
Bit 2—TGR Interrupt Enable C (TGIEC):		Description amended This bit is reserved for channels 1 and 2. It always reads as 0. The write value should always be 0.
10.2.5 Timer Status Register (TSR)	217	Description amended The timer status register (TSR) is an 8-bit register that indicates the status of each channel. The MTU has three TSR registers, one each for channel. TSR is initialized to H'C0 by a power-on reset or by standby mode.

Item	Page	Revision (See Manual for Details)
10.4.4 Buffer Operation Buffer Operation Examples—when TGR Is an Input Capture Register	237	Description amended Figure 10.20 shows an example of TGRA set as an input capture register with the TGRA and TGRC registers set for buffer operation.
Figure 10.20 Buffer Operation Example (Input Capture Register)	238	Figure amended TIOC0A
10.4.6 PWM Mode	240	Description amended A period can be set for a register by using the TGR compare-match as a counter clear source. All channels can be independently set to PWM mode. Synchronous operation is also possible.
10.4.7 Phase Counting Mode Phase Counting Mode Application Example:	250	Description amended The channel 1 TGR1A and TGR1B registers are set for the input capture function, the channel 0 TGR0A and TGR0C register compare-match is used as an input capture source, and all of the control period increment and decrement values are stored. This procedure enables the accurate detection of position and speed.
10.6.1 Input/Output Timing Output Compare Output Timing:	254	Description amended The compare-match signal is generated at the final state of TCNT and TGR matching. When a compare-match signal is issued, the output value set in TIOR is output to the output compare output pin (the TIOC pin). After TCNT and TGR matching, a compare-match signal is not issued until immediately before the TCNT input clock.
10.7.10 TCNT2 Write and Overflow/Underflow Contention in Cascade Connection	269	Description amended With timer counters TCNT1 and TCNT2 in a cascade connection, when a contention occurs during TCNT1 count (during a TCNT2 overflow/underflow) in the T_2 state of the TCNT2 write cycle, the write to TCNT2 is conducted, and the TCNT1 count signal is prohibited. At this point, if there is match with TGR1A and the TCNT1 value, a compare signal is issued. Furthermore, when the TCNT1 count clock is selected as the input capture source of channel 0, TGRA0 to TGRD0 carry out the input capture operation. In addition, when the compare match/input capture is selected as the input capture source of TGRB1, TGRB1 carries out input capture operation. The timing is shown in figure 10.57.

Item	Page	Revision (See Manual for Details)
10.8.1 Operating Modes	273	Description amended • Normal mode (channels 0 to 2) • PWM mode 1 (channels 0 to 2) • PWM mode 2 (channels 0 to 2) • Phase counting modes 1 to 4 (channels 1 and 2)
10.8.3 Operation in Case of Re-Setting Due to Error during Operation, Etc.	273	Description amended The MTU has four operating modes, as stated above. There are thus 16 mode transition combinations . Possible mode transition combinations are shown in table 10.14.
10.8.4 Overview of Initialization Procedures and Mode Transitions in Case of Error during Operation, etc. (3) Operation when Error Occurs during Normal Mode Operation, and Operation is Restarted in PWM Mode 2:	277	Note deleted
(4) Operation when Error Occurs during Normal Mode Operation, and Operation is Restarted in Phase Counting Mode:	278	Note deleted
(7) Operation when Error Occurs during PWM Mode 1 Operation, and Operation is Restarted in PWM Mode 2:	281	Note deleted
(8) Operation when Error Occurs during PWM Mode 1 Operation, and Operation is Restarted in Phase Counting Mode:	282	Note deleted

Item	Page	Revision (See Manual for Details)
12.2.7 Serial Status Register (SSR) Bit 4—Framing Error (FER):	318	Description amended and notes added

Bit 4

FER	Description
0	Receiving is in progress or has ended normally*1 [Clearing conditions] • Power-on reset or standby mode • When 0 is written to FER after reading FER = 1
1	A receive framing error occurred*2 [Setting condition] When at the end of an SCI receive operation the final stop bit of the receive data is checked and its value*2 is 0

Notes:
1. The FER flag is not affected and retains their previous values when the RE bit in SCR is cleared to 0.
2. When the stop bit length is two bits, only the first bit is checked to see if it is a 1. The second stop bit is not checked. When a framing error occurs, the SCI transfers the receive data into the RDR but does not set RDRF. Serial receiving cannot continue while FER is set to 1. In the clock synchronous mode, serial transmitting is also disabled. In addition, serial transmission cannot continue in clock synchronous mode.

Bit 3—Parity Error (PER):

Description amended and notes added

Bit 3

PER	Description
0	Receiving is in progress or has ended normally*1 [Clearing conditions] • Power-on reset or standby mode • When 0 is written to PER after reading PER = 1
1	A receive parity error occurred*2 [Setting condition] PER is set to 1 if the number of 1s in receive data, including the parity bit, does not match the even or odd parity setting of the parity mode bit (O/$\overline{E}$) in the serial mode register (SMR)

Notes:
1. The PER flag is not affected and retains their previous values when the RE bit in SCR is cleared to 0.
2. When a parity error occurs, the SCI transfers the receive data into the RDR but does not set RDRF. Serial receiving cannot continue while PER is set to 1. In the clock synchronous mode, serial transmitting is also disabled. In addition, serial transmission cannot continue in clock synchronous mode.

Item	Page	Revision (See Manual for Details)
12.5.7 Constraints on DMAC Use	366	Description amended • When using an external clock source for the synchronization clock, update the TDR with the DMAC , and then after five system clocks or more elapse, input a transmit clock. If a transmit clock is input in the first four system clocks after the TDR is written, an error may occur (figure 12.22).
13.1.1 Features	367	Description amended • High-speed conversion — Minimum conversion time: 2.9 µs per channel (for 28-MHz operation) 1.4 µs per channel during continuous conversion
13.4 Operation	378	Description amended • In buffer operation, the previous conversion result is saved in a buffer register at the end of a conversion for the relevant channel. • In simultaneous sampling operation, the analog input voltages of two channels are sampled simultaneously then converted in order. • Software, a timer conversion start trigger (MTU) can be selected as the conversion start condition.
13.4.7 Conversion Start Modes	388	Description amended In the low-power conversion mode, power is applied to the analog circuitry simultaneous to the conversion start (ADST set). When 200 cycles of the reference clock have elapsed, conversion becomes possible for the analog circuit and the first A/D conversion begins. When performing consecutive conversions, the second and later conversions are executed in 20 cycles. Select the basic clock with the CKS bit of the ADCSR. When the A/D conversion ends, ADST is cleared to 0 and the analog circuit power supply is automatically cut off. Because the analog circuit is only active during the A/D conversion operation period in this mode, current consumption can be reduced.

Item	Page	Revision (See Manual for Details)
13.4.8 A/D Conversion Time Table 13.7 A/D Conversion Times	392	Note 2 amended 2. Table entries are for when PWR = 1. If 200 states have not elapsed since the ADST bit has been set, no conversions are done until after those 200 states have occurred. When PWR = 0, add 200 states to the first A/D conversion start delay time. When two or more conversions are performed in succession, tcp is 20 cycles when CKS = 0, and 40 cycles when CKS = 1.
Table 13.8 Operating Frequency and CKS Bit Settings		Note added Note: The indication "—" means the setting is not available.
13.6.5 A/D Conversion Termination (HD6417014R only)	394	Title amended
14.1.3 Pin Configuration	399	Description amended The eight analog input pins are divided into two groups, with analog input pins 0 to 3 (AN0 to AN3) comprising group 0, and analog input pins 4 to 7 (AN4 to AN7) comprising group 1. The AV_{CC} and AV_{SS} pins are for the mid-speed speed A/D converter internal analog section power supply.
14.2.1 A/D Data Register A to D (ADDRA to ADDRD)	401	Description amended A/D registers are special registers that read stored results of A/D conversion in 16 bits. There are four registers: ADDRA to ADDRD.
14.4.2 Scan Mode (SCAN = 1)	409	Description amended An example of operation in scan mode when three channels of group 0 (AN0 to AN2) are selected for A/D conversion is shown in figure 14.4. 1. Set the operation mode to scan mode (SCAN = 1), set the scan group to group 0 (CH2 = 0), set the analog channels to AN0 to AN2 (CH1 = 1, CH0 = 0), and then start A/D conversion (ADST = 1).
14.5 Interrupt	414	Description amended The mid-speed A/D converter's interrupt source is summarized in table 14.5. When the DMAC are activated by an ADI interrupt, the ADF flag of ADCSR is cleared to 0 by register access of A/D.
15.4.1 Interrupt Sources	427	Title amended

Item	Page	Revision (See Manual for Details)
15.4.3 Compare Match Flag Clear Timing	428	Description amended The CMF bit of the CMCSR register is cleared either by writing a 0 to it after reading a 1 . Figure 15.5 shows the timing when the CMF bit is cleared by the CPU.
16.3.2 Port A Control Registers L1, L2 (PACRL1 and PACRL2)	446	Description amended PACRL1 is initialized by external power-on reset to H'4000 in extended mode, and to H'0000 in single chip mode. PACRL2 is initialized by external power-on reset to H'0000. Neither register is initialized by reset by WDT, standby mode, or sleep mode, so the previous data is maintained.
Port A Control Register L1 (PACRL1): Bit 14—PA15 Mode (PA15MD):	447	Description amended **Bit 14** **PA15MD Description** 0 General input/output (PA15) (single chip mode initial value) 1 Clock output (CK) (extended mode initial value)
16.3.3 Port B I/O Register (PBIOR)	452	Description amended The port B I/O register L (PBIOR) is a 16-bit read/write register that selects input or output for the ten pins of port B (eight pins in the SH7014). Bits PB9IOR to PB0IOR correspond to the PB9/$\overline{\text{IRQ7}}$/A21 pin to PB0/A16 pin. PBIOR is enabled when the port B pins function as input/outputs (PB9 to PB0). For other functions, it is disabled.
17.2.2 Port A Data Register L (PADRL)	477	Description amended PADRL is initialized by an external power-on reset. However, PADRL is not initialized for a reset by WDT, standby mode, or sleep mode.
17.3.2 Port B Data Register (PBDR)	479	Description amended PBDR is initialized by an external power-on reset. However, PBDR is not initialized for a reset by WDT, standby mode, or sleep mode.
17.4.2 Port C Data Register (PCDR)	481	Description amended PCDR is initialized by an external power-on reset. However, PCDR is not initialized for a reset by WDT, standby mode, or sleep mode.
17.5.2 Port D Data Register L (PDDRL)	483	Description amended PDDRL is initialized by an external power-on reset. However, PDDRL is not initialized for a reset by WDT, standby mode, or sleep mode.

Item	Page	Revision (See Manual for Details)
17.6.2 Port E Data Register (PEDR)	485	Description amended PEDR is initialized by a external power-on reset. However, PEDR is not initialized for a reset by WDT, standby mode, or sleep mode, so the previous data is retained.
17.7.2 Port F Data Register (PFDR)	487	Description amended PFDR is an 8-bit read-only register that stores data for port F. The bits PF7DR to PF0DR correspond to the PF7/AN7 to PF0/AN0 pins. Any value written into these bits is ignored, and there is no effect on the status of the pins. When any of the bits are read, the pin status rather than the bit value is read directly. However, when an A/D converter analog input is being sampled, values of 1 are read out. Table 17.17 shows the read/write operations of the port F data register. PFDR is not initialized by power-on resets, standby mode, or sleep mode (the bits always reflect the pin status).
18.4 Register Configuration Table 18.3 Flash Memory Registers	497	Notes amended Notes: FLMCR1, FLMCR2, and EBR1 are 8-bit registers, and RAMER is a 16-bit register. Only byte accesses are valid for FLMCR1, FLMCR2, and EBR1, the access requiring 3 cycles. Three cycles are required for a byte or word access to RAMER, and 6 cycles for a longword access. When a longword write is performed on RAMER, 0 must always be written to the lower word (address H'FFFF8630). Operation is not guaranteed if any other value is written. 1. In modes in which the on-chip flash memory is disabled, a read will return H'00, and writes are invalid. Writes are also disabled when the FWE bit is set to 1 in FLMCR1. 2. A read in a mode in which on-chip flash memory is disabled will return H'00. 3. When a low level is input to the FWP pin, the initial value is H'80. 4. When a high level is input to the FWP pin, or if a low level is input and the SWE bit in FLMCR1 is not set, these registers are initialized to H'00.

Item	Page	Revision (See Manual for Details)
18.5.4 RAM Emulation Register (RAMER)	503	Description amended RAMER specifies the area of flash memory to be overlapped with part of RAM when emulating real-time flash memory programming. RAMER is initialized to H'0000 by a reset and in hardware standby mode. It is not initialized in software standby mode. RAMER settings should be made in user mode or user program mode.
18.7.2 Program-Verify Mode Figure 18.13 Program/ Program-Verify Flowchart	512	Figure amended and note 5 added 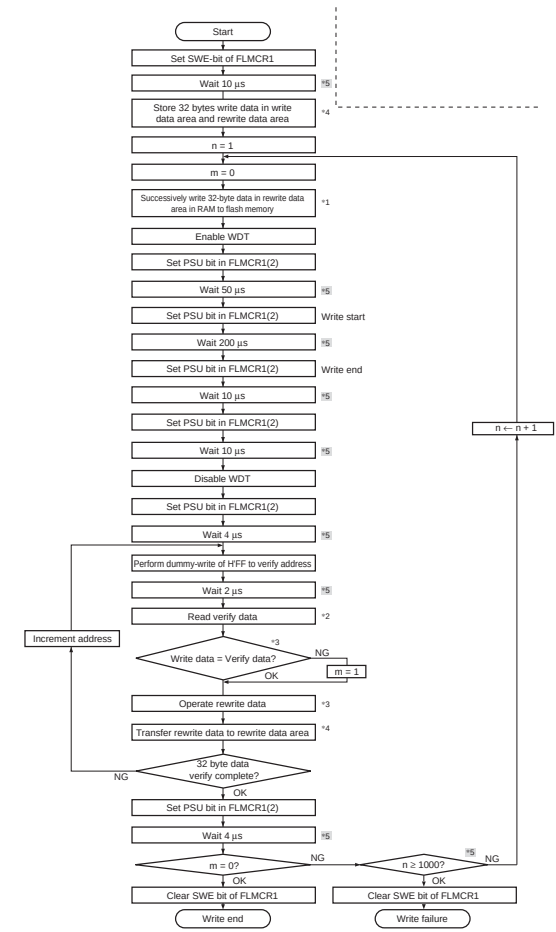 Note: 5. Set the values of x, y, z, α, β, γ, ε, η, and N to match the characteristics of the memory device.

Item	Page	Revision (See Manual for Details)
18.7.3 Erase Mode	517	Description added When erasing flash memory, the erase/erase-verify flowchart shown in figure 18.14 should be followed. To perform data or program erasure, set the 1 bit flash memory area to be erased in erase block register 1 (EBR1) at least 10 µs after setting the SWE bit to 1 in flash memory control register 1 (FLMCR1).
18.8.2 Software Protection	525	Description amended Software protection can be implemented by setting the SWE bit in FLMCR1, erase block register 1 (EBR1) and the RAMS bit in the RAM emulation register (RAMER).
18.11.4 Auto-Program Mode	538	Description amended 3. The lower 8 bits of the transfer address must be H'00, H'80. If a value other than an effective address is input, processing will switch to a memory write operation but a write error will be flagged. 4. Memory address transfer is performed in the second cycle (figure 18.24). Do not perform transfer after the third cycle.
18.11.6 Status Read Mode Table 18.19 Status Read Mode Return Commands	543	Note amended Note: I/O2 and I/O3 are undefined at present.
22.3.3 Bus Timing Table 22.7 Bus Timing	567	Description amended and notes added Conditions: V_{CC} = 5.0 V ± 10%, AV_{CC} = 5.0 V ±10%, AV_{CC} = V_{CC} ±10%, V_{SS} = AV_{SS} = 0 V, Ta = – 20 to +75°C Notes: TPC is the set value of the TPC bit in DCR. * The delay time Min values are reference values (typ).)
22.3.4 Direct Memory Access Controller Timing Table 22.8 Direct Memory Access Controller Timing	579	Description amended Conditions: V_{CC} = 5.0 V ± 10%, AV_{CC} = 5.0 V ± 10%, AV_{CC} = V_{CC} ±10%, V_{SS} = AV_{SS} = 0 V, Ta = – 20 to +75°C

Item	Page	Revision (See Manual for Details)
22.3.5 Multifunction Timer Pulse Unit Timing Table 22.9 Multifunction Timer Pulse Unit Timing	581	Description amended Conditions: V_{CC} = 5.0 V ± 10%, AV_{CC} = 5.0 V ± 10%, AV_{CC} = V_{CC} ±10%, V_{SS} = AV_{SS} = 0 V, Ta = – 20 to +75°C
22.3.6 I/O Port Timing Table 22.10 I/O Port Timing	582	Description amended Conditions: V_{CC} = 5.0 V ± 10%, AV_{CC} = 5.0 V ± 10%, AV_{CC} = V_{CC} ±10%, V_{SS} =AV_{SS} = 0 V, Ta = – 20 to +75°C
22.3.7 Watchdog Timer Timing Table 22.11 Watchdog Timer Timing	583	Description amended Conditions: V_{CC} = 5.0 V ± 10%, AV_{CC} = 5.0 V ± 10%, AV_{CC} = V_{CC} ±10%, V_{SS} = AV_{SS} = 0 V, Ta = – 20 to +75°C
22.3.8 Serial Communication Interface Timing Table 22.12 Serial Communication Interface Timing	583	Description amended Conditions: V_{CC} = 5.0 V ± 10%, AV_{CC} = 5.0 V ± 10%, AV_{CC}= V_{CC} ±10%, V_{SS} = AV_{SS} = 0 V, Ta = – 20 to +75°C
A.2 Functions	600 to 681	Newly added
Appendix B. I/O Port Block Diagrams Figure B.5 PAn/TCLKm/ $\overline{\text{IRQx}}$ Block Diagram (SH7014, Mask)	686	Title amended
C.1 Pin States Table C.1 Pin States in Reset, and Power-Down Modes	706	Title and table amended **Pin Function** **Class** / **Pin Name** Data bus: D0 to D15 SCI: SCK0, SCK1 TXD0, TXD1 RXD0, RXD1

All trademarks and registered trademarks are the property of their respective owners.

Contents

Section 1 SH7014/16/17 Overview 1
1.1 SH7014/16/17 Overview 1
1.1.1 SH7014/16/17 Series Features 1
1.2 Block Diagram 6
1.3 Pin Arrangement and Pin Functions 8
1.3.1 Pin Arrangement 8
1.3.2 Pin Arrangement by Mode 10
1.3.3 Pin Functions 14

Section 2 CPU 19
2.1 Register Configuration 19
2.1.1 General Registers (Rn) 19
2.1.2 Control Registers 20
2.1.3 System Registers 21
2.1.4 Initial Values of Registers 21
2.2 Data Formats 22
2.2.1 Data Format in Registers 22
2.2.2 Data Format in Memory 22
2.2.3 Immediate Data Format 22
2.3 Instruction Features 23
2.3.1 RISC-Type Instruction Set 23
2.3.2 Addressing Modes 26
2.3.3 Instruction Format 30
2.4 Instruction Set by Classification 33
2.5 Processing States 46
2.5.1 State Transitions 46
2.5.2 Power-Down State 48

Section 3 Operating Modes 51
3.1 Operating Modes, Types, and Selection 51
3.2 Explanation of Operating Modes 52
3.3 Pin Configuration 52

Section 4 Clock Pulse Generator (CPG) 53
4.1 Overview 53
4.1.1 Block Diagram 53
4.2 Oscillator 54
4.2.1 Connecting a Crystal Oscillator 54

4.2.2 External Clock Input Method 56
4.3 Prescaler 57

Section 5 Exception Processing 59
5.1 Overview 59
5.1.1 Types of Exception Processing and Priority 59
5.1.2 Exception Processing Operations 60
5.1.3 Exception Processing Vector Table 61
5.2 Resets 63
5.2.1 Power-on Reset 63
5.3 Address Errors 64
5.3.1 Address Error Sources 64
5.3.2 Address Error Exception Processing 65
5.4 Interrupts 65
5.4.1 Interrupt Sources 65
5.4.2 Interrupt Priority Level 66
5.4.3 Interrupt Exception Processing 66
5.5 Exceptions Triggered by Instructions 67
5.5.1 Types of Exceptions Triggered by Instructions 67
5.5.2 Trap Instructions 67
5.5.3 Illegal Slot Instructions 68
5.5.4 General Illegal Instructions 68
5.6 When Exception Sources Are Not Accepted 69
5.6.1 Immediately after a Delayed Branch Instruction 69
5.6.2 Immediately after an Interrupt-Disabled Instruction 69
5.7 Stack Status after Exception Processing Ends 70
5.8 Usage Notes 71
5.8.1 Value of Stack Pointer (SP) 71
5.8.2 Value of Vector Base Register (VBR) 71
5.8.3 Address Errors Caused by Stacking of Address Error Exception Processing 71

Section 6 Interrupt Controller (INTC) 73
6.1 Overview 73
6.1.1 Features 73
6.1.2 Block Diagram 73
6.1.3 Pin Configuration 75
6.1.4 Register Configuration 75
6.2 Interrupt Sources 76
6.2.1 NMI Interrupts 76
6.2.2 IRQ Interrupts 76

6.2.3 On-Chip Peripheral Module Interrupts 77
6.2.4 Interrupt Exception Vectors and Priority Rankings 77
6.3 Description of Registers 81
6.3.1 Interrupt Priority Registers A to H (IPRA to IPRH) 81
6.3.2 Interrupt Control Register (ICR) 82
6.3.3 IRQ Status Register (ISR) 83
6.4 Interrupt Operation 85
6.4.1 Interrupt Sequence 85
6.4.2 Stack after Interrupt Exception Processing 87
6.5 Interrupt Response Time 88
6.6 Data Transfer with Interrupt Request Signals 90
6.6.1 Handling DMAC Activating Sources but Not CPU Interrupt Sources 90
6.6.2 Treating CPU Interrupt Sources but Not DMAC Activating Sources 90

Section 7 Cache Memory (CAC) 91
7.1 Overview 91
7.1.1 Features 91
7.1.2 Block Diagram 92
7.1.3 Register Configuration 93
7.2 Register Explanation 94
7.2.1 Cache Control Register (CCR) 94
7.3 Address Array and Data Array 96
7.3.1 Cache Address Array Read/Write Space 96
7.3.2 Cache Data Array Read/Write Space 97
7.4 Usage Notes 98
7.4.1 Cache Initialization 98
7.4.2 Forced Access to Address Array and Data Array 98
7.4.3 Cache Miss Penalty and Cache Fill Timing 98
7.4.4 Cache Hit after Cache Miss 100

Section 8 Bus State Controller (BSC) 101
8.1 Overview 101
8.1.1 Features 101
8.1.2 Block Diagram 102
8.1.3 Pin Configuration 103
8.1.4 Register Configuration 103
8.1.5 Address Map 104
8.2 Description of Registers 107
8.2.1 Bus Control Register 1 (BCR1) 107
8.2.2 Bus Control Register 2 (BCR2) 109

8.2.3 Wait Control Register 1 (WCR1) ... 112
8.2.4 Wait Control Register 2 (WCR2) ... 114
8.2.5 DRAM Area Control Register (DCR) ... 115
8.2.6 Refresh Timer Control/Status Register (RTCSR) ... 118
8.2.7 Refresh Timer Counter (RTCNT) ... 121
8.2.8 Refresh Time Constant Register (RTCOR) ... 122
8.3 Accessing Ordinary Space ... 123
8.3.1 Basic Timing ... 123
8.3.2 Wait State Control ... 124
8.3.3 $\overline{\text{CS}}$ Assert Period Extension ... 126
8.4 DRAM Access ... 127
8.4.1 DRAM Direct Connection ... 127
8.4.2 Basic Timing ... 128
8.4.3 Wait State Control ... 129
8.4.4 Burst Operation ... 133
8.4.5 Refresh Timing ... 135
8.5 Address/Data Multiplex I/O Space Access ... 136
8.5.1 Basic Timing ... 136
8.5.2 Wait State Control ... 138
8.5.3 CS Assertion Extension ... 139
8.6 Waits between Access Cycles ... 140
8.6.1 Prevention of Data Bus Conflicts ... 140
8.6.2 Simplification of Bus Cycle Start Detection ... 142
8.7 Bus Arbitration ... 143
8.8 Memory Connection Examples ... 143
8.9 On-chip Peripheral I/O Register Access ... 145
8.10 CPU Operation when Program Is in External Memory ... 146

Section 9 Direct Memory Access Controller (DMAC) ... 147
9.1 Overview ... 147
9.1.1 Features ... 147
9.1.2 Block Diagram ... 148
9.1.3 Pin Configuration ... 149
9.1.4 Register Configuration ... 150
9.2 Register Descriptions ... 151
9.2.1 DMA Source Address Registers 0, 1 (SAR0, SAR1) ... 151
9.2.2 DMA Destination Address Registers 0, 1 (DAR0, DAR1) ... 152
9.2.3 DMA Transfer Count Registers 0, 1 (DMATCR0, DMATCR1) ... 153
9.2.4 DMA Channel Control Registers 0, 1 (CHCR0, CHCR1) ... 154
9.2.5 DMAC Operation Register (DMAOR) ... 159

9.3 Operation 161
9.3.1 DMA Transfer Flow 161
9.3.2 DMA Transfer Requests 163
9.3.3 Channel Priority 165
9.3.4 DMA Transfer Types 165
9.3.5 Number of Bus Cycle States and DREQ Pin Sample Timing 172
9.3.6 DMA Transfer Ending Conditions 187
9.3.7 DMAC Access from CPU 188
9.4 Examples of Use 188
9.4.1 Example of DMA Transfer between On-Chip SCI and External Memory 188
9.4.2 Example of DMA Transfer between External RAM and External Device with DACK 189
9.5 Usage Notes 190

Section 10 Multifunction Timer Pulse Unit (MTU) 191
10.1 Overview 191
10.1.1 Features 191
10.1.2 Block Diagram 195
10.1.3 Pin Configuration 196
10.1.4 Register Configuration 197
10.2 MTU Register Descriptions 199
10.2.1 Timer Control Register (TCR) 199
10.2.2 Timer Mode Register (TMDR) 203
10.2.3 Timer I/O Control Register (TIOR) 205
10.2.4 Timer Interrupt Enable Register (TIER) 214
10.2.5 Timer Status Register (TSR) 217
10.2.6 Timer Counters (TCNT) 220
10.2.7 Timer General Register (TGR) 221
10.2.8 Timer Start Register (TSTR) 221
10.2.9 Timer Synchro Register (TSYR) 222
10.3 Bus Master Interface 224
10.3.1 16-Bit Registers 224
10.3.2 8-Bit Registers 224
10.4 Operation 226
10.4.1 Overview 226
10.4.2 Basic Functions 226
10.4.3 Synchronous Operation 232
10.4.4 Buffer Operation 235
10.4.5 Cascade Connection Mode 238
10.4.6 PWM Mode 240

10.4.7 Phase Counting Mode 244
10.5 Interrupts 251
10.5.1 Interrupt Sources and Priority Ranking 251
10.5.2 DMAC Activation 252
10.5.3 A/D Converter Activation 252
10.6 Operation Timing 253
10.6.1 Input/Output Timing 253
10.6.2 Interrupt Signal Timing 258
10.7 Usage Notes 262
10.7.1 Input Clock Limitations 262
10.7.2 Note on Cycle Setting 262
10.7.3 Contention between TCNT Write and Clear 263
10.7.4 Contention between TCNT Write and Increment 264
10.7.5 Contention between Buffer Register Write and Compare Match 265
10.7.6 Contention between TGR Read and Input Capture 266
10.7.7 Contention between TGR Write and Input Capture 267
10.7.8 Contention between Buffer Register Write and Input Capture 268
10.7.9 Contention between TGR Write and Compare Match 269
10.7.10 TCNT2 Write and Overflow/Underflow Contention in Cascade Connection 269
10.7.11 Contention between Overflow/Underflow and Counter Clearing 271
10.7.12 Contention between TCNT Write and Overflow/Underflow 272
10.7.13 Cautions on Carrying Out Buffer Operation of Channel 0 in PWM Mode 1 272
10.8 MTU Output Pin Initialization 273
10.8.1 Operating Modes 273
10.8.2 Reset Start Operation 273
10.8.3 Operation in Case of Re-Setting Due to Error during Operation, Etc. 273
10.8.4 Overview of Initialization Procedures and Mode Transitions in Case of Error during Operation, etc. 274

Section 11 Watchdog Timer (WDT) 291
11.1 Overview 291
11.1.1 Features 291
11.1.2 Block Diagram 292
11.1.3 Pin Configuration 292
11.1.4 Register Configuration 293
11.2 Register Descriptions 293
11.2.1 Timer Counter (TCNT) 293
11.2.2 Timer Control/Status Register (TCSR) 294
11.2.3 Reset Control/Status Register (RSTCSR) 296
11.2.4 Register Access 297

11.3 Operation 298
11.3.1 Watchdog Timer Mode 298
11.3.2 Interval Timer Mode 300
11.3.3 Clearing the Standby Mode 300
11.3.4 Timing of Setting the Overflow Flag (OVF) 301
11.3.5 Timing of Setting the Watchdog Timer Overflow Flag (WOVF) 301
11.4 Usage Notes 302
11.4.1 TCNT Write and Increment Contention 302
11.4.2 Changing CKS2 to CKS0 Bit Values 302
11.4.3 Changing between Watchdog Timer/Interval Timer Modes 302
11.4.4 System Reset with $\overline{\text{WDTOVF}}$ 303
11.4.5 Internal Reset with the Watchdog Timer 303

Section 12 Serial Communication Interface (SCI) 305
12.1 Overview 305
12.1.1 Features 305
12.1.2 Block Diagram 306
12.1.3 Pin Configuration 307
12.1.4 Register Configuration 307
12.2 Register Descriptions 308
12.2.1 Receive Shift Register (RSR) 308
12.2.2 Receive Data Register (RDR) 308
12.2.3 Transmit Shift Register (TSR) 308
12.2.4 Transmit Data Register (TDR) 309
12.2.5 Serial Mode Register (SMR) 309
12.2.6 Serial Control Register (SCR) 312
12.2.7 Serial Status Register (SSR) 316
12.2.8 Bit Rate Register (BRR) 320
12.3 Operation 331
12.3.1 Overview 331
12.3.2 Operation in Asynchronous Mode 333
12.3.3 Multiprocessor Communication 343
12.3.4 Clock Synchronous Operation 351
12.4 SCI Interrupt Sources and the DMAC 362
12.5 Usage Notes 363
12.5.1 TDR Write and TDRE Flags 363
12.5.2 Simultaneous Multiple Receive Errors 363
12.5.3 Break Detection and Processing 364
12.5.4 Sending a Break Signal 364

12.5.5 Receive Error Flags and Transmitter Operation (Clock Synchronous Mode Only) 364
12.5.6 Receive Data Sampling Timing and Receive Margin in the Asynchronous Mode 364
12.5.7 Constraints on DMAC Use 366
12.5.8 Cautions for Clock Synchronous External Clock Mode 366
12.5.9 Caution for Clock Synchronous Internal Clock Mode 366

Section 13 High Speed A/D Converter — SH7014 — 367
13.1 Overview 367
13.1.1 Features 367
13.1.2 Block Diagram 368
13.1.3 Pin Configuration 368
13.1.4 Register Configuration 369
13.2 Register Descriptions 370
13.2.1 A/D Data Registers A to H (ADDRA to ADDRH) 370
13.2.2 A/D Control/Status Register (ADCSR) 371
13.2.3 A/D Control Register (ADCR) 374
13.3 Bus Master Interface 376
13.4 Operation 378
13.4.1 Select-Single Mode 378
13.4.2 Select-Scan Mode 379
13.4.3 Group-Single Mode 380
13.4.4 Group-Scan Mode 381
13.4.5 Buffer Operation 383
13.4.6 Simultaneous Sampling Operation 386
13.4.7 Conversion Start Modes 388
13.4.8 A/D Conversion Time 391
13.5 Interrupts 393
13.6 Usage Notes 394
13.6.1 Analog Input Voltage Range 394
13.6.2 AV_{CC}, AV_{SS} Input Voltages 394
13.6.3 Input Ports 394
13.6.4 Conversion Start Modes 394
13.6.5 A/D Conversion Termination (HD6417014R only) 394
13.6.6 Handling of Analog Input Pins 395

Section 14 Mid-Speed A/D Converter — SH7016, SH7017 — 397
14.1 Overview 397
14.1.1 Features 397

14.1.2 Block Diagram 398
14.1.3 Pin Configuration 399
14.1.4 Register Configuration 400
14.2 Register Descriptions 401
14.2.1 A/D Data Register A to D (ADDRA to ADDRD) 401
14.2.2 A/D Control/Status Register (ADCSR) 402
14.2.3 A/D Control Register (ADCR) 404
14.3 Interface with CPU 405
14.4 Operation 407
14.4.1 Single Mode (SCAN = 0) 407
14.4.2 Scan Mode (SCAN = 1) 409
14.4.3 Input Sampling and A/D Conversion Time 411
14.4.4 MTU Trigger Input Timing 413
14.5 Interrupt 414
14.6 A/D Conversion Precision Definitions 415
14.7 Usage Notes 417
14.7.1 Analog Voltage Settings 417
14.7.2 Handling of Analog Input Pins 417

Section 15 Compare Match Timer (CMT) 419
15.1 Overview 419
15.1.1 Features 419
15.1.2 Block Diagram 419
15.1.3 Register Configuration 421
15.2 Register Descriptions 422
15.2.1 Compare Match Timer Start Register (CMSTR) 422
15.2.2 Compare Match Timer Control/Status Register (CMCSR) 423
15.2.3 Compare Match Timer Counter (CMCNT) 424
15.2.4 Compare Match Timer Constant Register (CMCOR) 425
15.3 Operation 426
15.3.1 Period Count Operation 426
15.3.2 CMCNT Count Timing 426
15.4 Interrupts 427
15.4.1 Interrupt Sources 427
15.4.2 Compare Match Flag Set Timing 427
15.4.3 Compare Match Flag Clear Timing 428
15.5 Usage Notes 429
15.5.1 Contention between CMCNT Write and Compare Match 429
15.5.2 Contention between CMCNT Word Write and Incrementation 430
15.5.3 Contention between CMCNT Byte Write and Incrementation 431

Section 16 Pin Function Controller (PFC) 433
16.1 Overview 433
16.2 Register Configuration 444
16.3 Register Descriptions 445
16.3.1 Port A I/O Register L (PAIORL) 445
16.3.2 Port A Control Registers L1, L2 (PACRL1 and PACRL2) 446
16.3.3 Port B I/O Register (PBIOR) 452
16.3.4 Port B Control Registers (PBCR1 and PBCR2) 453
16.3.5 Port C I/O Register (PCIOR) — SH7016, SH7017 — 458
16.3.6 Port C Control Register (PCCR) — SH7016, SH7017 — 459
16.3.7 Port D I/O Register L (PDIORL) — SH7016, SH7017 — 464
16.3.8 Port D Control Register L (PDCRL) — SH7016, SH7017 — 465
16.3.9 Port E I/O Register (PEIOR) 470
16.3.10 Port E Control Registers 1, 2 (PECR1 and PECR2) 471

Section 17 I/O Ports (I/O) 475
17.1 Overview 475
17.2 Port A 475
17.2.1 Register Configuration 476
17.2.2 Port A Data Register L (PADRL) 477
17.3 Port B 478
17.3.1 Register Configuration 478
17.3.2 Port B Data Register (PBDR) 479
17.4 Port C — SH7016, SH7017 — 480
17.4.1 Register Configuration 480
17.4.2 Port C Data Register (PCDR) 481
17.5 Port D — SH7016, SH7017 — 482
17.5.1 Register Configuration 482
17.5.2 Port D Data Register L (PDDRL) 483
17.6 Port E 484
17.6.1 Register Configuration 484
17.6.2 Port E Data Register (PEDR) 485
17.7 Port F 486
17.7.1 Register Configuration 486
17.7.2 Port F Data Register (PFDR) 487

Section 18 128 kB Flash Memory (F-ZTAT) 489
18.1 Features 489
18.2 Overview 490
18.2.1 Block Diagram 490

18.2.2 Mode Transitions 491
18.2.3 On-Board Programming Modes 492
18.2.4 Flash Memory Emulation in RAM 494
18.2.5 Differences between Boot Mode and User Program Mode 495
18.2.6 Block Configuration 496
18.3 Pin Configuration 496
18.4 Register Configuration 497
18.5 Register Descriptions 498
18.5.1 Flash Memory Control Register 1 (FLMCR1) 498
18.5.2 Flash Memory Control Register 2 (FLMCR2) 501
18.5.3 Erase Block Register 1 (EBR1) 502
18.5.4 RAM Emulation Register (RAMER) 503
18.6 On-Board Programming Modes 504
18.6.1 Boot Mode 505
18.6.2 User Program Mode 509
18.7 Programming/Erasing Flash Memory 510
18.7.1 Program Mode 510
18.7.2 Program-Verify Mode 511
18.7.3 Erase Mode 517
18.7.4 Erase-Verify Mode 518
18.8 Protection 524
18.8.1 Hardware Protection 524
18.8.2 Software Protection 525
18.8.3 Error Protection 526
18.9 Flash Memory Emulation in RAM 528
18.10 Note on Flash Memory Programming/Erasing 530
18.11 Flash Memory Programmer Mode 530
18.11.1 Socket Adapter Pin Correspondence Diagram 531
18.11.2 Programmer Mode Operation 533
18.11.3 Memory Read Mode 534
18.11.4 Auto-Program Mode 538
18.11.5 Auto-Erase Mode 540
18.11.6 Status Read Mode 542
18.11.7 Status Polling 543
18.11.8 Programmer Mode Transition Time 544
18.11.9 Notes on Memory Programming 545

Section 19 Mask ROM 547
19.1 Overview 547

Section 20 RAM 549
20.1 Overview 549

Section 21 Power-Down State 551
21.1 Overview 551
21.1.1 Power-Down States 551
21.1.2 Related Register 552
21.2 Standby Control Register (SBYCR) 553
21.3 Sleep Mode 554
21.3.1 Transition to Sleep Mode 554
21.3.2 Canceling Sleep Mode 554
21.4 Standby Mode 554
21.4.1 Transition to Standby Mode 554
21.4.2 Canceling the Standby Mode 556
21.4.3 Standby Mode Application Example 557

Section 22 Electrical Characteristics (5 V 28.7 MHz) 559
22.1 Absolute Maximum Ratings 559
22.2 DC Characteristics 560
22.3 AC Characteristics 562
22.3.1 Clock Timing 562
22.3.2 Control Signal Timing 564
22.3.3 Bus Timing 566
22.3.4 Direct Memory Access Controller Timing 579
22.3.5 Multifunction Timer Pulse Unit Timing 581
22.3.6 I/O Port Timing 582
22.3.7 Watchdog Timer Timing 583
22.3.8 Serial Communication Interface Timing 583
22.3.9 High Speed A/D Converter Timing — SH7014 — 584
22.3.10 Mid-speed Converter Timing — SH7016, SH7017 — 586
22.3.11 Measuring Conditions for AC Characteristics 588
22.4 A/D Converter Characteristics 589

Appendix A On-Chip Supporting Module Registers 591
A.1 Addresses 591
A.2 Functions 600

Appendix B I/O Port Block Diagrams 682

Appendix C Pin States 707

C.1 Pin States 707
C.2 Pin States of Bus Related Signals 709

Appendix D Notes when Converting the F-ZTAT Application Software to the Mask-ROM Versions 713

Appendix E Product Code Lineup 714

Appendix F Package Dimensions 715

Section 1 SH7014/16/17 Overview

1.1 SH7014/16/17 Overview

The SH7014/16/17 CMOS single-chip microprocessors integrate a Renesas Technology-original architecture, high-speed CPU with peripheral functions required for system configuration.

The CPU has a RISC-type instruction set. Most instructions can be executed in one clock cycle, which greatly improves instruction execution speed. In addition, the 32-bit internal-bus architecture enhances data processing power. With this CPU, it has become possible to assemble low cost, high performance/high-functioning systems, even for applications that were previously impossible with microprocessors, such as real-time control, which demands high speeds. In particular, the SH7040 series has a 1-kbyte on-chip cache, which allows an improvement in CPU performance during external memory access.

In addition, this LSI includes on-chip peripheral functions necessary for system configuration, such as large-capacity ROM (except the SH7014, which is ROMless) and RAM, timers, a serial communication interface (SCI), an A/D converter, an interrupt controller, and I/O ports. Memory or peripheral LSIs can be connected efficiently with an external memory access support function. This greatly reduces system cost.

This LSI has an F-ZTAT™* version with on-chip flash memory and a mask ROM version. These versions enable users to respond quickly and flexibly to changing application specifications, growing production volumes, and other conditions.

Notes: F-ZTAT (Flexible ZTAT) is a trademark of Renesas Technology Corp.

1.1.1 SH7014/16/17 Series Features

CPU:

- Original Renesas Technology architecture
- 32-bit internal data bus
- General-register machine
  - — Sixteen 32-bit general registers
  - — Three 32-bit control registers
  - — Four 32-bit system registers
- RISC-type instruction set
  - — Instruction length: 16-bit fixed length for improved code efficiency
  - — Load-store architecture (basic operations are executed between registers)

— Delayed branch instructions reduce pipeline disruption during branch
— Instruction set based on C language

- Instruction execution time: one instruction/cycle (35 ns/instruction at 28.7-MHz operation)
- Address space: Architecture supports 4 Gbytes
- On-chip multiplier: multiplication operations (32 bits × 32 bits → 64 bits) and multiplication/accumulation operations (32 bits × 32 bits + 64 bits → 64 bits) executed in two to four cycles
- Five-stage pipeline

Cache Memory:

- 1-kbyte instruction cache
- Caching of instruction codes and PC relative read data
- 4-byte line length (1 longword: 2 instruction lengths)
- 256 entry cache tags
- Direct map method
- On-chip ROM/RAM, and on-chip I/O areas not objects of cache
- Used in common with on-chip RAM; 2 kbytes of on-chip RAM used as address array/data array when cache is enabled

Interrupt Controller (INTC):

- Seven external interrupt pins (NMI, $\overline{\text{IRQ}}$ × 6)
- Twenty-eight internal interrupt sources
- Sixteen programmable priority levels

Bus State Controller (BSC):

- Supports external extended memory access
  — 8-bit, or 16-bit external data bus
- Memory address space divided into five areas (four areas of SRAM space, one area of DRAM space) with the following settable features:
  — Number of wait cycles
  — Outputs chip-select signals for each area
  — During DRAM space access:
    - Outputs $\overline{\text{RAS}}$ and $\overline{\text{CAS}}$ signals for DRAM
    - Can generate a RAS precharge time assurance Tp cycle

- DRAM burst access function
  - Supports high-speed access mode for DRAM
- DRAM refresh function
  - Programmable refresh interval
  - Supports CAS-before-RAS refresh and self-refresh modes
- Wait cycles can be inserted using an external $\overline{\text{WAIT}}$ signal
- Address data multiplex I/O devices can be accessed

Note: No bus release

Direct Memory Access Controller (DMAC) (2 Channels):

- Supports cycle-steal and burst transfers
- Supports single address mode and dual address mode transfers
- Priority order: fixed at channel 0 > channel 1
- Transfer counter: 16 bits
- Transfer request sources: external DREQ input, auto-request, and on-chip supporting modules
- Address space: 4 Gbytes
- Choice of 8-, 16-, or 32-bit transfer data size

Multifunction Timer/Pulse Unit (MTU) (3 Channels):

- Maximum 8 types of waveform output or maximum 16 types of pulse I/O processing possible based on 16-bit timer, 3 channels
- 8 dual-use output compare/input capture registers
- 8 independent comparators
- 8 types of counter input clock
- Input capture function
- Pulse output mode
  - One shot, toggle, PWM
- Phase calculation mode
  - 2-phase encoder calculation processing

Compare Match Timer (CMT) (Two Channels):

- 16-bit free-running counter
- One compare register
- Generates an interrupt request upon compare match

Watchdog Timer (WDT) (One Channel):

- Watchdog timer or interval timer
- Count overflow can generate an internal reset, external signal, or interrupt

Serial Communication Interface (SCI) (Two Channels):

(Per Channel):

- Asynchronous or clock-synchronous mode is selectable
- Can transmit and receive simultaneously (full duplex)
- On-chip dedicated baud rate generator
- Multiprocessor communication function

I/O Ports:

- SH7014
  - Input/output: 35
  - Input: 8
  - Total: 43
- SH7016/17
  - Input/output: 74
  - Input: 8
  - Total: 82

A/D Converter:

- 10 bits × 8 channels
- The SH7014 has a high-speed A/D converter, while the SH7016 and SH7017 have a mid-speed A/D converter.

On-Chip Memory:

- ROM
  - SH7014: ROMless
  - SH7016: 64 kbytes (mask ROM)
  - SH7017: 128 kbytes (flash ROM)
- RAM: SH7014/16: 3 kbytes (1 kbyte when cache is used)
  SH7017: 4 kbytes (2 kbytes when cache is used)

Operating Modes:

- Operating modes
  - Non-extended ROM mode (SH7014/16/17)
  - Extended ROM mode (SH7016/17)
  - Single-chip mode (SH7016/17)
- Processing states
  - Program execution state
  - Exception processing state
- Power-down modes
  - Sleep mode
  - Software standby mode

Clock Pulse Generator (CPG):

- On-chip clock pulse generator
  - On-chip clock-doubling PLL circuit

Product Lineup:

Product Code	On-Chip ROM	On-Chip RAM	A/D Precision	Frequency/ Voltage	Temperature	Package
HD6417014F28	ROMless	3 kB	±15 LSB (high-speed A/D)	28.7 MHz/5 V	–20 to +75°C	FP-112
HD6417014RF28	ROMless	3 kB	±8 LSB (high-speed A/D)	28.7 MHz/5 V	–20 to +75°C	FP-112
HD6437016F28	64 kB mask ROM	3 kB	±4 LSB (mid-speed A/D)	28.7 MHz/5 V	–20 to +75°C	FP-112
HD64F7017F28	128 kB flash memory	4 kB	±4LSB (mid-speed A/D)	28.7 MHz/5 V	–20 to +75°C	FP-112

1.2 Block Diagram

Figure 1.1 is a block diagram of the SH7014. Figure 1.2 is a block diagram of the SH7016/17.

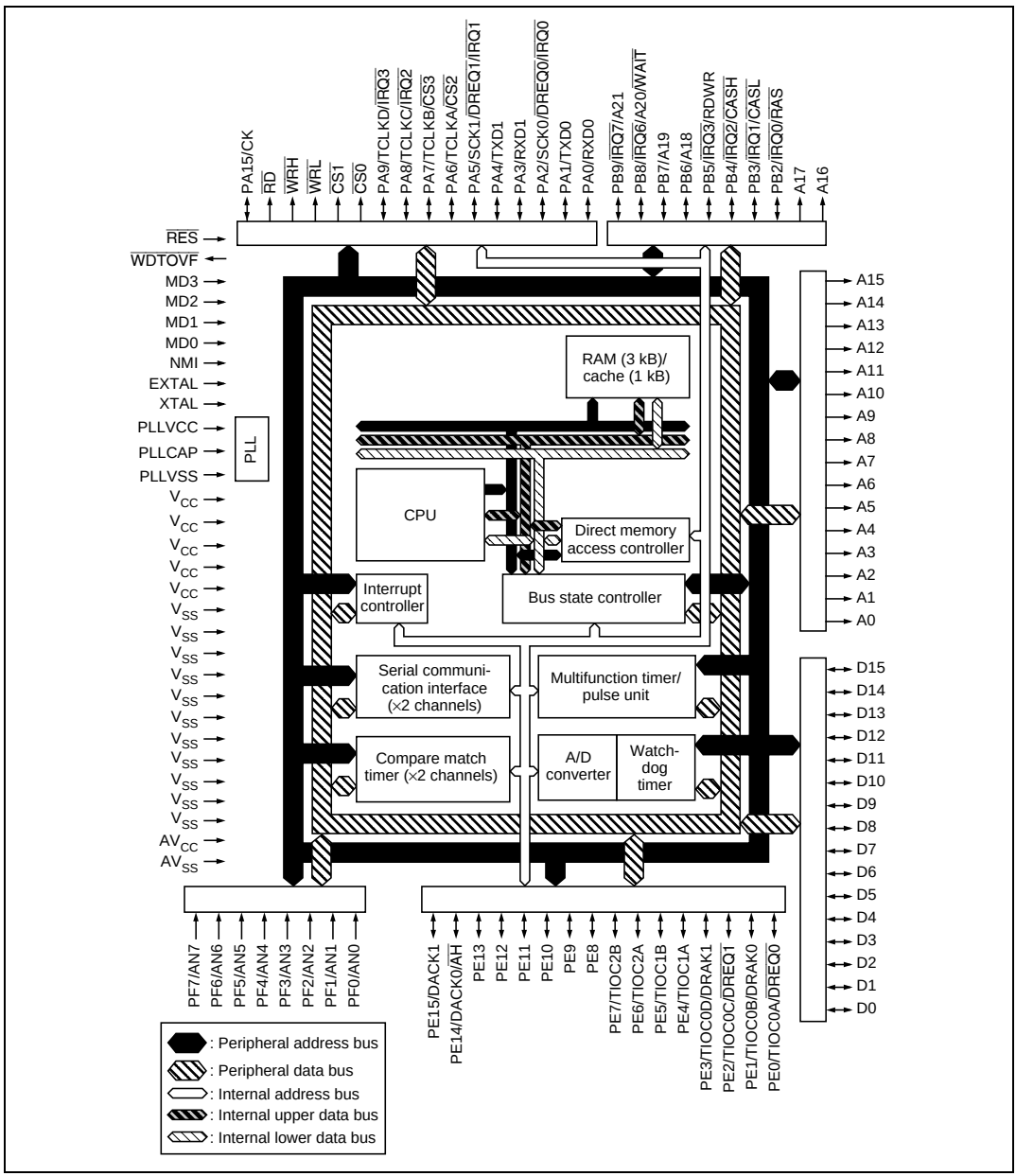

Figure 1.1 Block Diagram of the SH7014

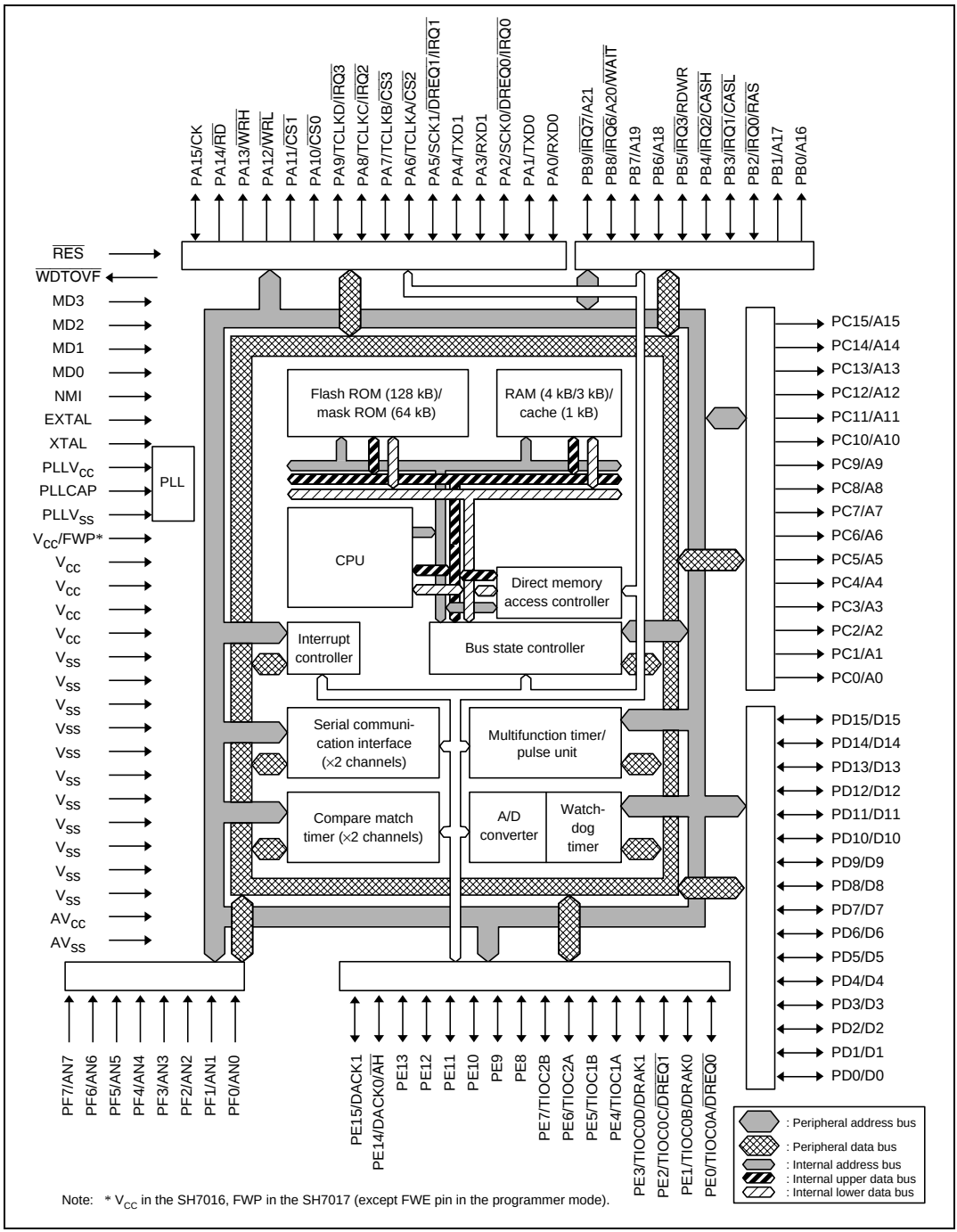

Note: * V_{CC} in the SH7016, FWP in the SH7017 (except FWE pin in the programmer mode).

Figure 1.2 Block Diagram of the SH7016, SH7017

1.3 Pin Arrangement and Pin Functions

1.3.1 Pin Arrangement

Figure 1.3 shows the pin arrangement for the SH7014 (top view).

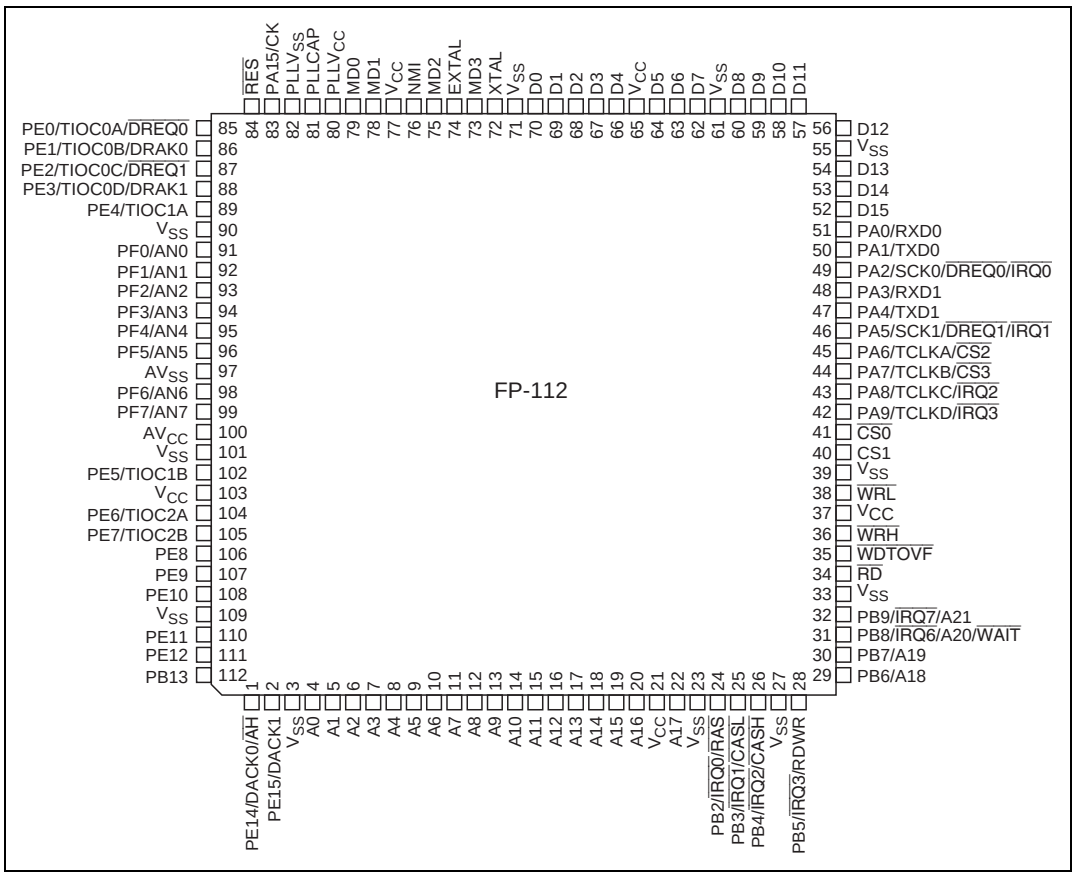

Figure 1.3 SH7014 Pin Arrangement (FP-112 Top View)

Figure 1.4 shows the pin arrangement for the 144-pin QFP pin arrangement.

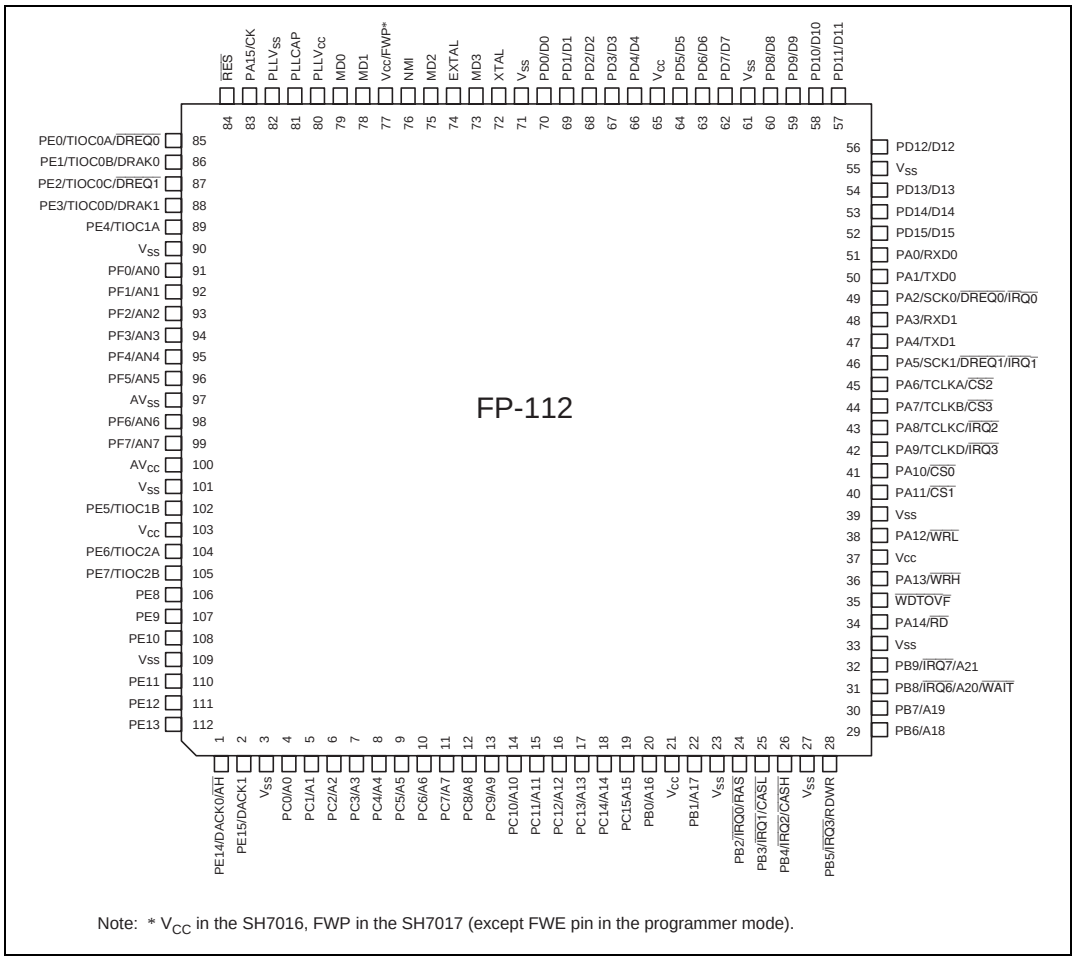

Note: * V_{CC} in the SH7016, FWP in the SH7017 (except FWE pin in the programmer mode).

Figure 1.4 SH7016, SH7017 Pin Arrangement (QFP-112 Top View)

1.3.2 Pin Arrangement by Mode

Table 1.1 Pin Arrangement by Mode for SH7017F (FP-112 Pin)

Pin No.	MCU Mode	Programmer Mode
1	PE14/DACK0/$\overline{AH}$	NC
2	PE15/DACK1	NC
3	V_{SS}	V_{SS}
4	PC0/A0	A0
5	PC1/A1	A1
6	PC2/A2	A2
7	PC3/A3	A3
8	PC4/A4	A4
9	PC5/A5	A5
10	PC6/A6	A6
11	PC7/A7	A7
12	PC8/A8	A8
13	PC9/A9	A9
14	PC10/A10	A10
15	PC11/A11	A11
16	PC12/A12	A12
17	PC13/A13	A13
18	PC14/A14	A14
19	PC15/A15	A15
20	PB0/A16	A16
21	V_{CC}	V_{CC}
22	PB1/A17	NC
23	V_{SS}	V_{SS}
24	PB2/$\overline{IRQ0}$/$\overline{RAS}$	NC
25	PB3/$\overline{IRQ1}$/$\overline{CASL}$	NC
26	PB4/$\overline{IRQ2}$/$\overline{CASH}$	A17
27	V_{SS}	V_{SS}
28	PB5/$\overline{IRQ3}$/RDWR	NC
29	PB6/A18	NC
30	PB7/A19	NC

Pin No.	MCU Mode	Programmer Mode
31	PB8/$\overline{\text{IRQ6}}$/A20/$\overline{\text{WAIT}}$	NC
32	PB9/$\overline{\text{IRQ7}}$/A21	NC
33	V_{SS}	V_{SS}
34	PA14/$\overline{\text{RD}}$	NC
35	$\overline{\text{WDTOVF}}$	NC
36	PA13/$\overline{\text{WRH}}$	NC
37	V_{CC}	V_{CC}
38	PA12/$\overline{\text{WRL}}$	NC
39	V_{SS}	V_{SS}
40	PA11/$\overline{\text{CS1}}$	NC
41	PA10/$\overline{\text{CS0}}$	NC
42	PA9/TCLKD/$\overline{\text{IRQ3}}$	$\overline{\text{CE}}$
43	PA8/TCLKC/$\overline{\text{IRQ2}}$	$\overline{\text{OE}}$
44	PA7/TCLKB/$\overline{\text{CS3}}$	$\overline{\text{WE}}$
45	PA6/TCLKA/$\overline{\text{CS2}}$	NC
46	PA5/SCK1/$\overline{\text{DREQ1}}$/$\overline{\text{IRQ1}}$	V_{CC}
47	PA4/TXD1	NC
48	PA3 /RXD1	NC
49	PA2/SCK0/$\overline{\text{DREQ0}}$/$\overline{\text{IRQ0}}$	V_{CC}
50	PA1/TXD0	V_{CC}
51	PA0/RXD0	NC
52	PD15/D15	NC
53	PD14/D14	NC
54	PD13/D13	NC
55	V_{SS}	V_{SS}
56	PD12/D12	NC
57	PD11/D11	NC
58	PD10/D10	NC
59	PD9/D9	NC
60	PD8/D8	NC
61	V_{SS}	V_{SS}
62	PD7/D7	D7
63	PD6/D6	D6

Pin No.	MCU Mode	Programmer Mode
64	PD5/D5	D5
65	V_{CC}	V_{CC}
66	PD4/D4	D4
67	PD3/D3	D3
68	PD2/D2	D2
69	PD1/D1	D1
70	PD0/D0	D0
71	V_{SS}	V_{SS}
72	XTAL	XTAL
73	MD3	MD3
74	EXTAL	EXTAL
75	MD2	MD2
76	NMI	V_{CC}
77	V_{CC} (FWP)	FWE
78	MD1	MD1
79	MD0	MD0
80	$PLLV_{CC}$	$PLLV_{CC}$
81	PLLCAP	PLLCAP
82	$PLLV_{SS}$	$PLLV_{SS}$
83	PA15/CK	NC
84	$\overline{RES}$	RES
85	PE0/TIOC0A/$\overline{DREQ0}$	NC
86	PE1/TIOC0B/DRAK0	NC
87	PE2/TIOC0C/$\overline{DREQ1}$	NC
88	PE3/TIOC0D/DRAK1	NC
89	PE4/TIOC1A	NC
90	V_{SS}	V_{SS}
91	PF0/AN0	V_{SS}
92	PF1/AN1	V_{SS}
93	PF2/AN2	V_{SS}
94	PF3/AN3	V_{SS}
95	PF4/AN4	V_{SS}
96	PF5/AN5	V_{SS}

Pin No.	MCU Mode	Programmer Mode
97	AV_{SS}	V_{SS}
98	PF6/AN6	V_{SS}
99	PF7/AN7	V_{SS}
100	AV_{CC}	V_{CC}
101	V_{SS}	V_{SS}
102	PE5/TIOC1B	NC
103	V_{CC}	V_{CC}
104	PE6/TIOC2A	NC
105	PE7/TIOC2B	NC
106	PE8	NC
107	PE9	NC
108	PE10	NC
109	V_{SS}	V_{SS}
110	PE11	NC
111	PE12	NC
112	PE13	NC

1.3.3 Pin Functions

Table 1.2 lists the pin functions.

Table 1.2 Pin Functions

Classification	Symbol	I/O	Name	Function
Power supply	V_{CC}	I	Supply	Connects to power supply. Connect all V_{CC} pins to the system supply. No operation will occur if there are any open pins.
	V_{SS}	I	Ground	Connects to ground. Connect all V_{SS} pins to the system ground. No operation will occur if there are any open pins.
Clock	$PLLV_{CC}$	I	PLL supply	On-chip PLL oscillator supply.
	$PLLV_{SS}$	I	PLL ground	On-chip PLL oscillator ground.
	PLLCAP	I	PLL capacitance	On-chip PLL oscillator external capacitance connection pin.
	EXTAL	I	External clock	Connect a crystal oscillator. Also, an external clock can be input to the EXTAL pin.
	XTAL	I	Crystal	Connect a crystal oscillator.
	CK	O	System clock	Supplies the system clock to peripheral devices.
System control	$\overline{RES}$	I	Power-on reset	Power-on reset when low
	$\overline{WDTOVF}$	O	Watchdog timer overflow	Overflow output signal from WDT
Operating mode control	MD0 to MD3	I	Mode set	Determines the operating mode. Do not change input value during operation.
	FWP	I	Flash memory write protect	Protects flash memory from being written or deleted.
Interrupts	NMI	I	Non-maskable interrupt	Non-maskable interrupt request pin. Enables selection of whether to accept on the rising or falling edge.
	$\overline{IRQ0}$ to $\overline{IRQ3}$, $\overline{IRQ6}$, $\overline{IRQ7}$	I	Interrupt requests 0 to 3, 6,7	Maskable interrupt request pins. Allows selection of level input and edge input.
Address bus	A0 to A21	O	Address bus	Outputs addresses.

Classification	Symbol	I/O	Name	Function
Data bus	D0 to D15	I/O	Data bus	16-bit bidirectional data bus
Bus control	$\overline{CS0}$ to $\overline{CS3}$	O	Chip selects 0 to 3	Chip select signals for external memory or devices.
	$\overline{RD}$	O	Read	Indicates reading from an external device.
	$\overline{WRH}$	O	Upper write	Indicates writing the upper 8 bits of external data.
	$\overline{WRL}$	O	Lower write	Indicates writing the lower 8 bits of external data.
	$\overline{WAIT}$	I	Wait	Input causes insertion of wait cycles into the bus cycle during external space access.
	$\overline{RAS}$	O	Row address strobe	Timing signal for DRAM row address strobe.
	$\overline{CASH}$	O	Upper column address strobe	Timing signal for DRAM column address strobe. Output when the upper 8 bits of data are accessed.
	$\overline{CASL}$	O	Lower column address strobe	Timing signal for DRAM column address strobe. Output when the lower 8 bits of data are accessed.
	RDWR	O	DRAM read/write	DRAM write strobe signal.
	$\overline{AH}$	O	Address hold	Address hold timing signal for devices using an address/data multiplex bus.
Multifunction Timer Pulse Unit (MTU)	TCLKA TCLKB TCLKC TCLKD	I	MTU timer clock input	Input pins for external clocks to the MTU counter.
	TIOC0A TIOC0B TIOC0C TIOC0D	I/O	MTU input capture/output compare (channel 0)	Channel 0 input capture input/output compare output/PWM output pins.

Classification	Symbol	I/O	Name	Function
Multifunction Timer Pulse Unit (MTU)	TIOC1A TIOC1B	I/O	MTU input capture/output compare (channel 1)	Channel 1 input capture input/output compare output/PWM output pins.
	TIOC2A TIOC2B	I/O	MTU input capture/output compare (channel 2)	Channel 2 input capture input/output compare output/PWM output pins.
Direct memory access controller (DMAC)	$\overline{\text{DREQ0}}$ to $\overline{\text{DREQ1}}$	I	DMA transfer request (channels 0, 1)	Input pin for external requests for DMA transfer.
	DRAK0 to DRAK1	O	DREQ request acknowledgment (channels 0, 1)	Output the input sampling acknowledgment of external DMA transfer requests.
	DACK0 to DACK1	O	DMA transfer strobe (channels 0, 1)	Output a strobe to the external I/O of external DMA transfer requests.
Serial communication interface (SCI)	TxD0 to TxD1	O	Transmit data (channels 0, 1)	SCI0, SCI1 transmit data output pins.
	RxD0 to RxD1	I	Receive data (channels 0, 1)	SCI0, SCI1 receive data input pins.
	SCK0 to SCK1	I/O	Serial clock (channels 0, 1)	SCI0, SCI1 clock input/output pins.
A/D Converter	AV_{CC}	I	Analog supply	Analog supply; connected to V_{CC}.
	AV_{SS}	I	Analog ground	Analog supply; connected to V_{SS}.
	AN0 to AN7	I	Analog input	Analog signal input pins.
I/O ports	PA0 to PA9, PA15 (SH7014) PA0 to PA15 (SH7016/17)	I/O	General purpose port	General purpose input/output port pins. Each bit can be designated for input/output.
	PB2 to PB9 (SH7014) PB0 to PB9 (SH7016/17)	I/O	General purpose port	General purpose input/output port pins. Each bit can be designated for input/output.
	PC0 to PC15 (SH7016/17)	I/O	General purpose port	General purpose input/output port pins. Each bit can be designated for input/output.

Classification	Symbol	I/O	Name	Function
I/O ports	PD0 to PD15 (SH7016/17)	I/O	General purpose port	General purpose input/output port pins. Each bit can be designated for input/output.
	PE0 to PE15	I/O	General purpose port	General purpose input/output port pins. Each bit can be designated for input/output.
	PF0 to PF7	I	General purpose port	General purpose input port pins.

Usage Notes

1. Unused input pins should be pulled up or pulled down.
2. The $\overline{\text{WDTOVF}}$ pin should not be pulled down in the SH7017 F-ZTAT version. However, if it is necessary to pull this pin down, a resistance of 100 kΩ or higher should be used.

Section 2 CPU

2.1 Register Configuration

The register set consists of sixteen 32-bit general registers, three 32-bit control registers and four 32-bit system registers.

2.1.1 General Registers (Rn)

The sixteen 32-bit general registers (Rn) are numbered R0 to R15. General registers are used for data processing and address calculation. R0 is also used as an index register. Several instructions have R0 fixed as their only usable register. R15 is used as the hardware stack pointer (SP). Saving and recovering the status register (SR) and program counter (PC) in exception processing is accomplished by referencing the stack using R15. Figure 2.1 shows the general registers.

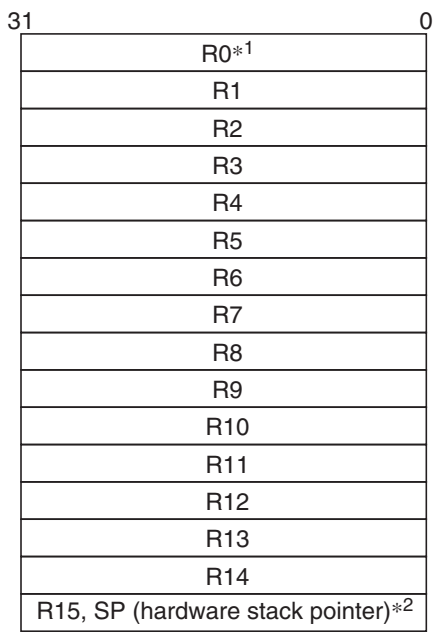

Notes: 1. R0 functions as an index register in the indirect indexed register addressing mode and indirect indexed GBR addressing mode. In some instructions, R0 functions as a fixed source register or destination register.
2. R15 functions as a hardware stack pointer (SP) during exception processing.

Figure 2.1 General Registers

2.1.2 Control Registers

The 32-bit control registers consist of the 32-bit status register (SR), global base register (GBR), and vector base register (VBR). The status register indicates processing states. The global base register functions as a base address for the indirect GBR addressing mode to transfer data to the registers of on-chip peripheral modules. The vector base register functions as the base address of the exception processing vector area (including interrupts). Figure 2.2 shows a control register.

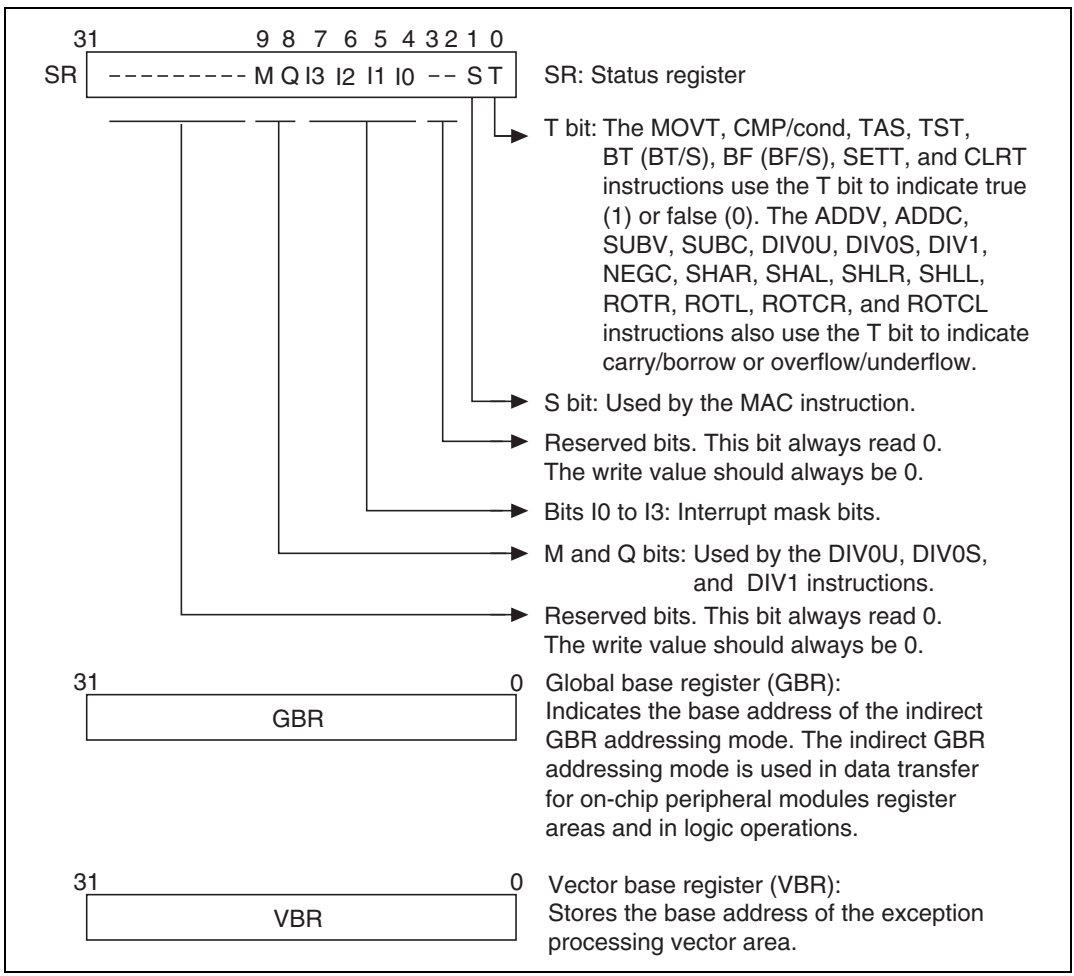

Figure 2.2 Control Registers

2.1.3 System Registers

System registers consist of four 32-bit registers: high and low multiply and accumulate registers (MACH and MACL), the procedure register (PR), and the program counter (PC). The multiply and accumulate registers store the results of multiply and accumulate operations. The procedure register stores the return address from the subroutine procedure. The program counter stores program addresses to control the flow of the processing. Figure 2.3 shows a system register.

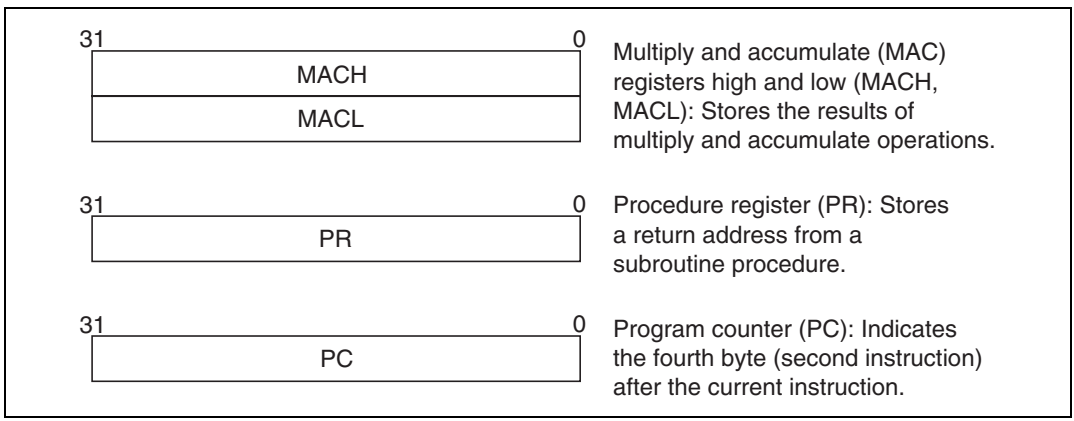

Figure 2.3 System Registers

2.1.4 Initial Values of Registers

Table 2.1 lists the values of the registers after reset.

Table 2.1 Initial Values of Registers

Classification	Register	Initial Value
General registers	R0 to R14	Undefined
	R15 (SP)	Value of the stack pointer in the vector address table
Control registers	SR	Bits I3 to I0 are 1111 (H'F), reserved bits are 0, and other bits are undefined
	GBR	Undefined
	VBR	H'00000000
System registers	MACH, MACL, PR	Undefined
	PC	Value of the program counter in the vector address table

2.2 Data Formats

2.2.1 Data Format in Registers

Register operands are always longwords (32 bits). When the memory operand is only a byte (8 bits) or a word (16 bits), it is sign-extended into a longword when loaded into a register (figure 2.4).

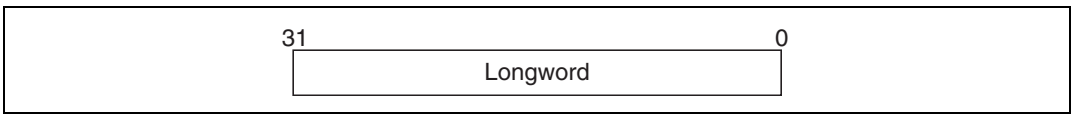

Figure 2.4 Longword Operand

2.2.2 Data Format in Memory

Memory data formats are classified into bytes, words, and longwords. Byte data can be accessed from any address, but an address error will occur if you try to access word data starting from an address other than 2n or longword data starting from an address other than 4n. In such cases, the data accessed cannot be guaranteed. The hardware stack area, referred to by the hardware stack pointer (SP, R15), uses only longword data starting from address 4n because this area holds the program counter and status register (figure 2.5).

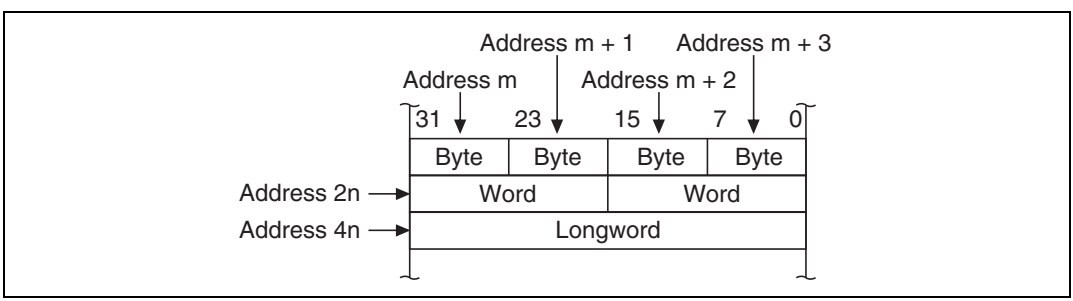

Figure 2.5 Byte, Word, and Longword Alignment

2.2.3 Immediate Data Format

Byte (8-bit) immediate data resides in an instruction code. Immediate data accessed by the MOV, ADD, and CMP/EQ instructions is sign-extended and handled in registers as longword data. Immediate data accessed by the TST, AND, OR, and XOR instructions is zero-extended and handled as longword data. Consequently, AND instructions with immediate data always clear the upper 24 bits of the destination register.

Word or longword immediate data is not located in the instruction code, but instead is stored in a memory table. An immediate data transfer instruction (MOV) accesses the memory table using the PC relative addressing mode with displacement.

2.3 Instruction Features

2.3.1 RISC-Type Instruction Set

All instructions are RISC type. This section details their functions.

16-Bit Fixed Length: All instructions are 16 bits long, increasing program code efficiency.

One Instruction per Cycle: The microprocessor can execute basic instructions in one cycle using the pipeline system. Instructions are executed in 35 ns at 28.7 MHz.

Data Length: Longword is the standard data length for all operations. Memory can be accessed in bytes, words, or longwords. Byte or word data accessed from memory is sign-extended and handled as longword data. Immediate data is sign-extended for arithmetic operations or zero-extended for logic operations. It also is handled as longword data (table 2.2).

Table 2.2 Sign Extension of Word Data

SH7014/16/17 CPU	Description	Example of Conventional CPU

`MOV.W @(disp,PC),R1`
`ADD R1,R0`
`.....`
`.DATA.W H'1234`
	Data is sign-extended to 32 bits, and R1 becomes H'00001234. It is next operated upon by an ADD instruction.	`ADD.W #H'1234,R0`

Note: @(disp, PC) accesses the immediate data.

Load-Store Architecture: Basic operations are executed between registers. For operations that involve memory access, data is loaded to the registers and executed (load-store architecture). Instructions such as AND that manipulate bits, however, are executed directly in memory.

Delayed Branch Instructions: Unconditional branch instructions are delayed. Executing the instruction that follows the branch instruction and then branching reduces pipeline disruption during branching (table 2.3). There are two types of conditional branch instructions: delayed branch instructions and ordinary branch instructions.

Table 2.3 Delayed Branch Instructions

SH7014/16/17 CPU	Description	Example of Conventional CPU
`BRA TRGET` `ADD R1,R0`	Executes an ADD before branching to TRGET	`ADD.W R1,R0` `BRA TRGET`

Multiplication/Accumulation Operation: 16-bit × 16-bit → 32-bit multiplication operations are executed in one to two cycles. 16-bit × 16-bit + 64-bit → 64-bit multiplication/accumulation operations are executed in two to three cycles. 32-bit × 32-bit → 64-bit and 32-bit × 32-bit + 64bit → 64-bit multiplication/accumulation operations are executed in two to four cycles.

T Bit: The T bit in the status register changes according to the result of the comparison, and in turn is the condition (true/false) that determines if the program will branch. The number of instructions that change the T bit is kept to a minimum to improve the processing speed (table 2.4).

Table 2.4 T Bit

SH7014/16/17 CPU	Description	Example of Conventional CPU

`CMP/GE R1,R0`
`BT TRGET0`
`BF TRGET1`
	T bit is set when R0 ≥ R1. The program branches to TRGET0 when R0 ≥ R1 and to TRGET1 when R0 < R1.	`CMP.W R1,R0`
		`BGE TRGET0`
		`BLT TRGET1`

`ADD #1,R0`
`CMP/EQ #0,R0`
`BT TRGET`
	T bit is not changed by ADD. T bit is set when R0 = 0. The program branches if R0 = 0.	`SUB.W #1,R0`
		`BEQ TRGET`

Immediate Data: Byte (8-bit) immediate data resides in instruction code. Word or longword immediate data is not input via instruction codes but is stored in a memory table. An immediate data transfer instruction (MOV) accesses the memory table using the PC relative addressing mode with displacement (table 2.5).

Table 2.5 Immediate Data Accessing

Classification	SH7014/16/17 CPU		Example of Conventional CPU
8-bit immediate	MOV	#H'12,R0	MOV.B #H'12,R0
16-bit immediate	MOV.W	@(disp,PC),R0	MOV.W #H'1234,R0
		.....	
	.DATA.W	H'1234	
32-bit immediate	MOV.L	@(disp,PC),R0	MOV.L #H'12345678,R0
		.....	
	.DATA.L	H'12345678	

Note: @(disp, PC) accesses the immediate data.

Absolute Address: When data is accessed by absolute address, the value already in the absolute address is placed in the memory table. Loading the immediate data when the instruction is executed transfers that value to the register and the data is accessed in the indirect register addressing mode (table 2.6).

Table 2.6 Absolute Address Accessing

Classification	SH7014/16/17 CPU		Example of Conventional CPU
Absolute address	MOV.L	@(disp,PC),R1	MOV.B @H'12345678,R0
	MOV.B	@R1,R0	
		.....	
	.DATA.L	H'12345678	

Note: @(disp,PC) accesses the immediate data.

16-Bit/32-Bit Displacement: When data is accessed by 16-bit or 32-bit displacement, the pre-existing displacement value is placed in the memory table. Loading the immediate data when the instruction is executed transfers that value to the register and the data is accessed in the indirect indexed register addressing mode (table 2.7).

Table 2.7 Displacement Accessing

Classification	SH7014/16/17 CPU		Example of Conventional CPU
16-bit displacement	MOV.W	@(disp,PC),R0	MOV.W @(H'1234,R1),R2
	MOV.W	@(R0,R1),R2	
		.....	
	.DATA.W	H'1234	

Note: @(disp,PC) accesses the immediate data.

2.3.2 Addressing Modes

Table 2.8 describes addressing modes and effective address calculation.

Table 2.8 Addressing Modes and Effective Addresses

Addressing Mode	Instruction Format	Effective Addresses Calculation	Equation
Direct register addressing	`Rn`	The effective address is register Rn. (The operand is the contents of register Rn.)	—
Indirect register addressing	`@Rn`	The effective address is the content of register Rn. 	Rn
Post-increment indirect register addressing	`@Rn+`	The effective address is the content of register Rn. A constant is added to the content of Rn after the instruction is executed. 1 is added for a byte operation, 2 for a word operation, and 4 for a longword operation. 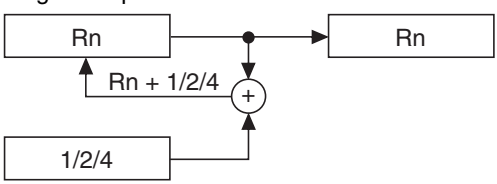 	Rn (After the instruction executes) Byte: Rn + 1 → Rn Word: Rn + 2 → Rn Longword: Rn + 4 → Rn
Pre-decrement indirect register addressing	`@-Rn`	The effective address is the value obtained by subtracting a constant from Rn. 1 is subtracted for a byte operation, 2 for a word operation, and 4 for a longword operation. 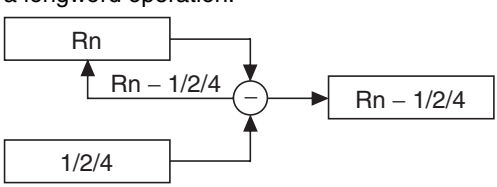 	Byte: Rn – 1 → Rn Word: Rn – 2 → Rn Longword: Rn – 4 → Rn (Instruction executed with Rn after calculation)

Addressing Mode	Instruction Format	Effective Addresses Calculation	Equation
Indirect register addressing with displacement	`@(disp:4, Rn)`	The effective address is Rn plus a 4-bit displacement (disp). The value of disp is zero-extended, and remains the same for a byte operation, is doubled for a word operation, and is quadrupled for a longword operation. 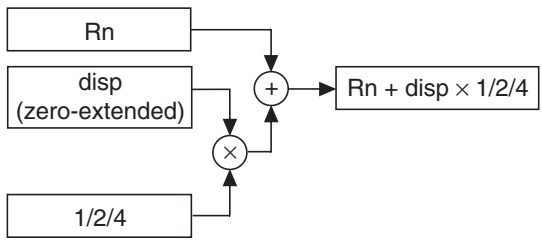	Byte: Rn + disp Word: Rn + disp × 2 Longword: Rn + disp × 4
Indirect indexed register addressing	`@(R0, Rn)`	The effective address is the Rn value plus R0. 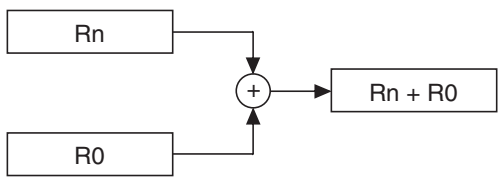	Rn + R0
Indirect GBR addressing with displacement	`@(disp:8, GBR)`	The effective address is the GBR value plus an 8-bit displacement (disp). The value of disp is zero-extended, and remains the same for a byte operation, is doubled for a word operation, and is quadrupled for a longword operation. 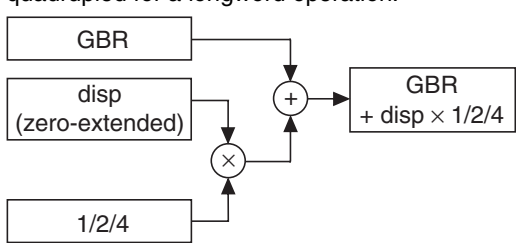	Byte: GBR + disp Word: GBR + disp × 2 Longword: GBR + disp × 4

Addressing Mode	Instruction Format	Effective Addresses Calculation	Equation
Indirect indexed GBR addressing	`@(R0, GBR)`	The effective address is the GBR value plus the R0. 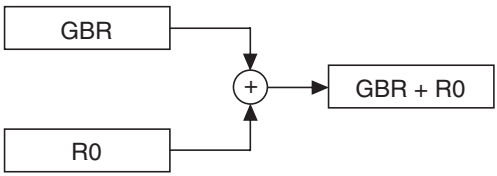	GBR + R0
PC relative addressing with displacement	`@(disp:8, PC)`	The effective address is the PC value plus an 8-bit displacement (disp). The value of disp is zero-extended, and is doubled for a word operation, and quadrupled for a longword operation. For a longword operation, the lowest two bits of the PC value are masked. 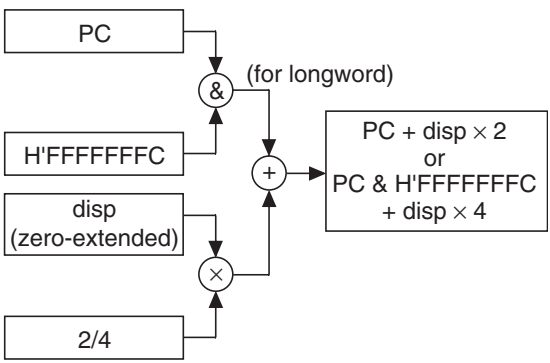	Word: PC + disp × 2 Longword: PC & H'FFFFFFFC + disp × 4

Addressing Mode	Instruction Format	Effective Addresses Calculation	Equation
PC relative addressing	`disp:8`	The effective address is the PC value sign-extended with an 8-bit displacement (disp), doubled, and added to the PC value. 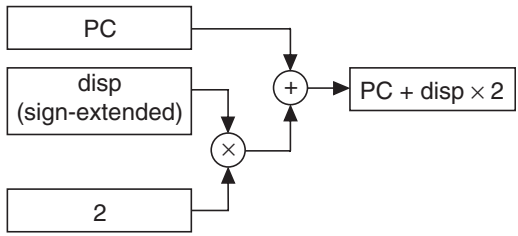	PC + disp × 2
	`disp:12`	The effective address is the PC value sign-extended with a 12-bit displacement (disp), doubled, and added to the PC value. 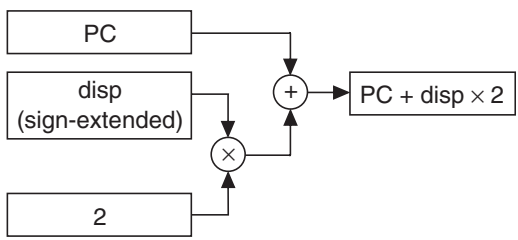	PC + disp × 2
	`Rn`	The effective address is the register PC value plus Rn. 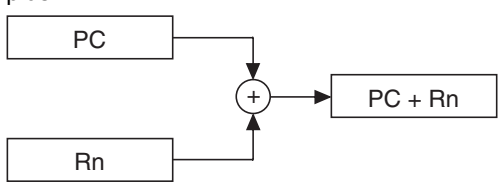	PC + Rn
Immediate addressing	`#imm:8`	The 8-bit immediate data (imm) for the TST, AND, OR, and XOR instructions are zero-extended.	—
	`#imm:8`	The 8-bit immediate data (imm) for the MOV, ADD, and CMP/EQ instructions are sign-extended.	—
	`#imm:8`	The 8-bit immediate data (imm) for the TRAPA instruction is zero-extended and is quadrupled.	—

2.3.3 Instruction Format

Table 2.9 lists the instruction formats for the source operand and the destination operand. The meaning of the operand depends on the instruction code. The symbols are used as follows:

- xxxx: Instruction code
- mmmm: Source register
- nnnn: Destination register
- iiii: Immediate data
- dddd: Displacement

Table 2.9 Instruction Formats

Instruction Formats	Source Operand	Destination Operand	Example
0 format 15 0 xxxx xxxx xxxx xxxx	—	—	`NOP`
n format 15 0 xxxx nnnn xxxx xxxx	—	nnnn: Direct register	`MOVT Rn`
	Control register or system register	nnnn: Direct register	`STS MACH,Rn`
	Control register or system register	nnnn: Indirect pre-decrement register	`STC.L SR,@-Rn`
m format 15 0 xxxx mmmm xxxx xxxx	mmmm: Direct register	Control register or system register	`LDC Rm,SR`
	mmmm: Indirect post-increment register	Control register or system register	`LDC.L @Rm+,SR`
	mmmm: Direct register	—	`JMP @Rm`
	mmmm: PC relative using Rm	—	`BRAF Rm`

Instruction Formats	Source Operand	Destination Operand	Example
nm format 15 0 xxxx nnnn mmmm xxxx	mmmm: Direct register	nnnn: Direct register	`ADD Rm,Rn`
	mmmm: Direct register	nnnn: Indirect register	`MOV.L Rm,@Rn`
	mmmm: Indirect post-increment register (multiply/ accumulate) nnnn*: Indirect post-increment register (multiply/ accumulate)	MACH, MACL	`MAC.W @Rm+,@Rn+`
	mmmm: Indirect post-increment register	nnnn: Direct register	`MOV.L @Rm+,Rn`
	mmmm: Direct register	nnnn: Indirect pre-decrement register	`MOV.L Rm,@-Rn`
	mmmm: Direct register	nnnn: Indirect indexed register	`MOV.L Rm,@(R0,Rn)`
md format 15 0 xxxx xxxx mmmm dddd	mmmmdddd: indirect register with displacement	R0 (Direct register)	`MOV.B @(disp,Rm),R0`
nd4 format 15 0 xxxx xxxx nnnn dddd	R0 (Direct register)	nnnndddd: Indirect register with displacement	`MOV.B R0,@(disp,Rn)`
nmd format 15 0 xxxx nnnn mmmm dddd	mmmm: Direct register	nnnndddd: Indirect register with displacement	`MOV.L Rm,@(disp,Rn)`
	mmmmdddd: Indirect register with displacement	nnnn: Direct register	`MOV.L @(disp,Rm),Rn`

Instruction Formats	Source Operand	Destination Operand	Example
d format 15 0 xxxx xxxx | dddd dddd	dddddddd: Indirect GBR with displacement	R0 (Direct register)	`MOV.L @(disp,GBR),R0`
	R0 (Direct register)	dddddddd: Indirect GBR with displacement	`MOV.L R0,@(disp,GBR)`
	dddddddd: PC relative with displacement	R0 (Direct register)	`MOVA @(disp,PC),R0`
	dddddddd: PC relative	—	`BF label`
d12 format 15 0 xxxx | dddd dddd dddd	dddddddddddd: PC relative	—	`BRA label` `(label = disp + PC)`
nd8 format 15 0 xxxx | nnnn | dddd dddd	dddddddd: PC relative with displacement	nnnn: Direct register	`MOV.L @(disp,PC),Rn`
i format 15 0 xxxx xxxx | iiii iiii	iiiiiiii: Immediate	Indirect indexed GBR	`AND.B #imm,@(R0,GBR)`
	iiiiiiii: Immediate	R0 (Direct register)	`AND #imm,R0`
	iiiiiiii: Immediate	—	`TRAPA #imm`
ni format 15 0 xxxx | nnnn | iiii iiii	iiiiiiii: Immediate	nnnn: Direct register	`ADD #imm,Rn`

Note: * In multiply/accumulate instructions, nnnn is the source register.

2.4 Instruction Set by Classification

Table 2.10 Classification of Instructions

Classification	Types	Operation Code	Function	No. of Instructions
Data transfer	5	MOV	Data transfer, immediate data transfer, peripheral module data transfer, structure data transfer	39
		MOVA	Effective address transfer	
		MOVT	T bit transfer	
		SWAP	Swap of upper and lower bytes	
		XTRCT	Extraction of the middle of registers connected	
Arithmetic operations	21	ADD	Binary addition	33
		ADDC	Binary addition with carry	
		ADDV	Binary addition with overflow check	
		CMP/cond	Comparison	
		DIV1	Division	
		DIV0S	Initialization of signed division	
		DIV0U	Initialization of unsigned division	
		DMULS	Signed double-length multiplication	
		DMULU	Unsigned double-length multiplication	
		DT	Decrement and test	
		EXTS	Sign extension	
		EXTU	Zero extension	
		MAC	Multiply/accumulate, double-length multiply/accumulate operation	
		MUL	Double-length multiply operation	
		MULS	Signed multiplication	
		MULU	Unsigned multiplication	
		NEG	Negation	
		NEGC	Negation with borrow	
		SUB	Binary subtraction	
		SUBC	Binary subtraction with borrow	
		SUBV	Binary subtraction with underflow	

Classification	Types	Operation Code	Function	No. of Instructions
Logic operations	6	AND	Logical AND	14
		NOT	Bit inversion	
		OR	Logical OR	
		TAS	Memory test and bit set	
		TST	Logical AND and T bit set	
		XOR	Exclusive OR	
Shift	10	ROTL	One-bit left rotation	14
		ROTR	One-bit right rotation	
		ROTCL	One-bit left rotation with T bit	
		ROTCR	One-bit right rotation with T bit	
		SHAL	One-bit arithmetic left shift	
		SHAR	One-bit arithmetic right shift	
		SHLL	One-bit logical left shift	
		SHLLn	n-bit logical left shift	
		SHLR	One-bit logical right shift	
		SHLRn	n-bit logical right shift	
Branch	9	BF	Conditional branch, conditional branch with delay (Branch when T = 0)	11
		BT	Conditional branch, conditional branch with delay (Branch when T = 1)	
		BRA	Unconditional branch	
		BRAF	Unconditional branch	
		BSR	Branch to subroutine procedure	
		BSRF	Branch to subroutine procedure	
		JMP	Unconditional branch	
		JSR	Branch to subroutine procedure	
		RTS	Return from subroutine procedure	

Classification	Types	Operation Code	Function	No. of Instructions
System control	11	CLRT	T bit clear	31
		CLRMAC	MAC register clear	
		LDC	Load to control register	
		LDS	Load to system register	
		NOP	No operation	
		RTE	Return from exception processing	
		SETT	T bit set	
		SLEEP	Shift into power-down mode	
		STC	Storing control register data	
		STS	Storing system register data	
		TRAPA	Trap exception handling	
Total:	62			142

Table 2.11 shows the format used in tables 2.12 to 2.17, which list instruction codes, operation, and execution states in order by classification.

Table 2.11 Instruction Code Format

Item	Format	Explanation
Instruction	`OP.Sz SRC,DEST`	OP: Operation code Sz: Size (B: byte, W: word, or L: longword) SRC: Source DEST: Destination Rm: Source register Rn: Destination register imm: Immediate data disp: Displacement*1
Instruction code	MSB ↔ LSB	mmmm: Source register nnnn: Destination register 0000: R0 0001: R1 . . . 1111: R15 iiii: Immediate data dddd: Displacement
Operation	→, ←	Direction of transfer
	(xx)	Memory operand
	M/Q/T	Flag bits in the SR
	&	Logical AND of each bit
	|	Logical OR of each bit
	^	Exclusive OR of each bit
	~	Logical NOT of each bit
	<<n	n-bit left shift
	>>n	n-bit right shift
Execution cycles	—	Value when no wait states are inserted*2
T bit	—	Value of T bit after instruction is executed. An em-dash (—) in the column means no change.

Notes: 1. Depending on the operand size, displacement is scaled ×1, ×2, or ×4. For details, see the *SH-1/SH-2/SH-DSP Software Manual*.

2. Instruction execution cycles: The execution cycles shown in the table are minimums. The actual number of cycles may be increased when (1) contention occurs between instruction fetches and data access, or (2) when the destination register of the load instruction (memory → register) and the register used by the next instruction are the same.

Table 2.12 Data Transfer Instructions

Instruction	Instruction Code	Operation	Exec. Cycles	T Bit
`MOV #imm,Rn`	`1110nnnniiiiiiii`	#imm → Sign extension → Rn	1	—
`MOV.W @(disp,PC),Rn`	`1001nnnnddddddd`	(disp × 2 + PC) → Sign extension → Rn	1	—
`MOV.L @(disp,PC),Rn`	`1101nnnnddddddd`	(disp × 4 + PC) → Rn	1	—
`MOV Rm,Rn`	`0110nnnnmmmm0011`	Rm → Rn	1	—
`MOV.B Rm,@Rn`	`0010nnnnmmmm0000`	Rm → (Rn)	1	—
`MOV.W Rm,@Rn`	`0010nnnnmmmm0001`	Rm → (Rn)	1	—
`MOV.L Rm,@Rn`	`0010nnnnmmmm0010`	Rm → (Rn)	1	—
`MOV.B @Rm,Rn`	`0110nnnnmmmm0000`	(Rm) → Sign extension → Rn	1	—
`MOV.W @Rm,Rn`	`0110nnnnmmmm0001`	(Rm) → Sign extension → Rn	1	—
`MOV.L @Rm,Rn`	`0110nnnnmmmm0010`	(Rm) → Rn	1	—
`MOV.B Rm,@-Rn`	`0010nnnnmmmm0100`	Rn – 1 → Rn, Rm → (Rn)	1	—
`MOV.W Rm,@-Rn`	`0010nnnnmmmm0101`	Rn – 2 → Rn, Rm → (Rn)	1	—
`MOV.L Rm,@-Rn`	`0010nnnnmmmm0110`	Rn – 4 → Rn, Rm → (Rn)	1	—
`MOV.B @Rm+,Rn`	`0110nnnnmmmm0100`	(Rm) → Sign extension → Rn,Rm + 1 → Rm	1	—
`MOV.W @Rm+,Rn`	`0110nnnnmmmm0101`	(Rm) → Sign extension → Rn,Rm + 2 → Rm	1	—
`MOV.L @Rm+,Rn`	`0110nnnnmmmm0110`	(Rm) → Rn,Rm + 4 → Rm	1	—
`MOV.B R0,@(disp,Rn)`	`10000000nnnndddd`	R0 → (disp + Rn)	1	—
`MOV.W R0,@(disp,Rn)`	`10000001nnnndddd`	R0 → (disp × 2 + Rn)	1	—
`MOV.L Rm,@(disp,Rn)`	`0001nnnnmmmmdddd`	Rm → (disp × 4 + Rn)	1	—
`MOV.B @(disp,Rm),R0`	`10000100mmmmdddd`	(disp + Rm) → Sign extension → R0	1	—
`MOV.W @(disp,Rm),R0`	`10000101mmmmdddd`	(disp × 2 + Rm) → Sign extension → R0	1	—
`MOV.L @(disp,Rm),Rn`	`0101nnnnmmmmdddd`	(disp × 4 + Rm) → Rn	1	—
`MOV.B Rm,@(R0,Rn)`	`0000nnnnmmmm0100`	Rm → (R0 + Rn)	1	—

Instruction	Instruction Code	Operation	Exec. Cycles	T Bit
MOV.W Rm,@(R0,Rn)	0000nnnnmmmm0101	Rm → (R0 + Rn)	1	—
MOV.L Rm,@(R0,Rn)	0000nnnnmmmm0110	Rm → (R0 + Rn)	1	—
MOV.B @(R0,Rm),Rn	0000nnnnmmmm1100	(R0 + Rm) → Sign extension → Rn	1	—
MOV.W @(R0,Rm),Rn	0000nnnnmmmm1101	(R0 + Rm) → Sign extension → Rn	1	—
MOV.L @(R0,Rm),Rn	0000nnnnmmmm1110	(R0 + Rm) → Rn	1	—
MOV.B R0,@(disp,GBR)	11000000dddddddd	R0 → (disp + GBR)	1	—
MOV.W R0,@(disp,GBR)	11000001dddddddd	R0 → (disp × 2 + GBR)	1	—
MOV.L R0,@(disp,GBR)	11000010dddddddd	R0 → (disp × 4 + GBR)	1	—
MOV.B @(disp,GBR),R0	11000100dddddddd	(disp + GBR) → Sign extension → R0	1	—
MOV.W @(disp,GBR),R0	11000101dddddddd	(disp × 2 + GBR) → Sign extension → R0	1	—
MOV.L @(disp,GBR),R0	11000110dddddddd	(disp × 4 + GBR) → R0	1	—
MOVA @(disp,PC),R0	11000111dddddddd	disp × 4 + PC → R0	1	—
MOVT Rn	0000nnnn00101001	T → Rn	1	—
SWAP.B Rm,Rn	0110nnnnmmmm1000	Rm → Swap the bottom two bytes → Rn	1	—
SWAP.W Rm,Rn	0110nnnnmmmm1001	Rm → Swap two consecutive words → Rn	1	—
XTRCT Rm,Rn	0010nnnnmmmm1101	Rm: Middle 32 bits of Rn → Rn	1	—

Table 2.13 Arithmetic Operation Instructions

Instruction		Instruction Code	Operation	Exec. Cycles	T Bit
ADD	Rm,Rn	0011nnnnmmmm1100	Rn + Rm → Rn	1	—
ADD	#imm,Rn	0111nnnniiiiiiii	Rn + imm → Rn	1	—
ADDC	Rm,Rn	0011nnnnmmmm1110	Rn + Rm + T → Rn, Carry → T	1	Carry
ADDV	Rm,Rn	0011nnnnmmmm1111	Rn + Rm → Rn, Overflow → T	1	Overflow
CMP/EQ	#imm,R0	10001000iiiiiiii	If R0 = imm, 1 → T	1	Comparison result
CMP/EQ	Rm,Rn	0011nnnnmmmm0000	If Rn = Rm, 1 → T	1	Comparison result
CMP/HS	Rm,Rn	0011nnnnmmmm0010	If Rn ≥ Rm with unsigned data, 1 → T	1	Comparison result
CMP/GE	Rm,Rn	0011nnnnmmmm0011	If Rn ≥ Rm with signed data, 1 → T	1	Comparison result
CMP/HI	Rm,Rn	0011nnnnmmmm0110	If Rn > Rm with unsigned data, 1 → T	1	Comparison result
CMP/GT	Rm,Rn	0011nnnnmmmm0111	If Rn > Rm with signed data, 1 → T	1	Comparison result
CMP/PL	Rn	0100nnnn00010101	If Rn > 0, 1 → T	1	Comparison result
CMP/PZ	Rn	0100nnnn00010001	If Rn ≥ 0, 1 → T	1	Comparison result
CMP/STR	Rm,Rn	0010nnnnmmmm1100	If Rn and Rm have an equivalent byte, 1 → T	1	Comparison result
DIV1	Rm,Rn	0011nnnnmmmm0100	Single-step division (Rn/Rm)	1	Calculation result
DIV0S	Rm,Rn	0010nnnnmmmm0111	MSB of Rn → Q, MSB of Rm → M, M ^ Q → T	1	Calculation result
DIV0U		0000000000011001	0 → M/Q/T	1	0

Instruction	Instruction Code	Operation	Exec. Cycles	T Bit
DMULS.L Rm,Rn	0011nnnnmmmm1101	Signed operation of Rn × Rm → MACH, MACL 32 × 32 → 64 bit	2 to 4*	—
DMULU.L Rm,Rn	0011nnnnmmmm0101	Unsigned operation of Rn × Rm → MACH, MACL 32 × 32 → 64 bit	2 to 4*	—
DT Rn	0100nnnn00010000	Rn – 1 → Rn, when Rn is 0, 1 → T. When Rn is nonzero, 0 → T	1	Comparison result
EXTS.B Rm,Rn	0110nnnnmmmm1110	A byte in Rm is sign-extended → Rn	1	—
EXTS.W Rm,Rn	0110nnnnmmmm1111	A word in Rm is sign-extended → Rn	1	—
EXTU.B Rm,Rn	0110nnnnmmmm1100	A byte in Rm is zero-extended → Rn	1	—
EXTU.W Rm,Rn	0110nnnnmmmm1101	A word in Rm is zero-extended → Rn	1	—
MAC.L @Rm+,@Rn+	0000nnnnmmmm1111	Signed operation of (Rn) × (Rm) + MAC → MAC 32 × 32 → 64 bit	3/ (2 to 4)*	—
MAC.W @Rm+,@Rn+	0100nnnnmmmm1111	Signed operation of (Rn) × (Rm) + MAC → MAC 16 × 16 + 64 → 64 bit	3/(2)*	—
MUL.L Rm,Rn	0000nnnnmmmm0111	Rn × Rm → MACL, 32 × 32 → 32 bit	2 to 4*	—
MULS.W Rm,Rn	0010nnnnmmmm1111	Signed operation of Rn × Rm → MAC 16 × 16 → 32 bit	1 to 3*	—
MULU.W Rm,Rn	0010nnnnmmmm1110	Unsigned operation of Rn × Rm → MAC 16 × 16 → 32 bit	1 to 3*	—
NEG Rm,Rn	0110nnnnmmmm1011	0 – Rm → Rn	1	—
NEGC Rm,Rn	0110nnnnmmmm1010	0 – Rm – T → Rn, Borrow → T	1	Borrow

Instruction		Instruction Code	Operation	Exec. Cycles	T Bit
SUB	Rm,Rn	0011nnnnmmmm1000	Rn – Rm → Rn	1	—
SUBC	Rm,Rn	0011nnnnmmmm1010	Rn – Rm – T → Rn, Borrow → T	1	Borrow
SUBV	Rm,Rn	0011nnnnmmmm1011	Rn – Rm → Rn, Underflow → T	1	Overflow

Note: * The normal minimum number of execution cycles. (The number in parentheses is the number of cycles when there is contention with following instructions.)

Table 2.14 Logic Operation Instructions

Instruction	Instruction Code	Operation	Exec. Cycles	T Bit
AND Rm,Rn	0010nnnnmmmm1001	Rn & Rm → Rn	1	—
AND #imm,R0	11001001iiiiiiii	R0 & imm → R0	1	—
AND.B #imm,@(R0,GBR)	11001101iiiiiiii	(R0 + GBR) & imm → (R0 + GBR)	3	—
NOT Rm,Rn	0110nnnnmmmm0111	~Rm → Rn	1	—
OR Rm,Rn	0010nnnnmmmm1011	Rn | Rm → Rn	1	—
OR #imm,R0	11001011iiiiiiii	R0 | imm → R0	1	—
OR.B #imm,@(R0,GBR)	11001111iiiiiiii	(R0 + GBR) | imm → (R0 + GBR)	3	—
TAS.B @Rn*	0100nnnn00011011	If (Rn) is 0, 1 → T; 1 → MSB of (Rn)*	4	Test result
TST Rm,Rn	0010nnnnmmmm1000	Rn & Rm; if the result is 0, 1 → T	1	Test result
TST #imm,R0	11001000iiiiiiii	R0 & imm; if the result is 0, 1 → T	1	Test result
TST.B #imm,@(R0,GBR)	11001100iiiiiiii	(R0 + GBR) & imm; if the result is 0, 1 → T	3	Test result
XOR Rm,Rn	0010nnnnmmmm1010	Rn ^ Rm → Rn	1	—
XOR #imm,R0	11001010iiiiiiii	R0 ^ imm → R0	1	—
XOR.B #imm,@(R0,GBR)	11001110iiiiiiii	(R0 + GBR) ^ imm → (R0 + GBR)	3	—

Note: * The on-chip DMAC bus cycles are not inserted between the read and write cycles of TAS instruction execution.

Table 2.15 Shift Instructions

Instruction		Instruction Code	Operation	Exec. Cycles	T Bit
ROTL	Rn	0100nnnn00000100	T ← Rn ← MSB	1	MSB
ROTR	Rn	0100nnnn00000101	LSB → Rn → T	1	LSB
ROTCL	Rn	0100nnnn00100100	T ← Rn ← T	1	MSB
ROTCR	Rn	0100nnnn00100101	T → Rn → T	1	LSB
SHAL	Rn	0100nnnn00100000	T ← Rn ← 0	1	MSB
SHAR	Rn	0100nnnn00100001	MSB → Rn → T	1	LSB
SHLL	Rn	0100nnnn00000000	T ← Rn ← 0	1	MSB
SHLR	Rn	0100nnnn00000001	0 → Rn → T	1	LSB
SHLL2	Rn	0100nnnn00001000	Rn<<2 → Rn	1	—
SHLR2	Rn	0100nnnn00001001	Rn>>2 → Rn	1	—
SHLL8	Rn	0100nnnn00011000	Rn<<8 → Rn	1	—
SHLR8	Rn	0100nnnn00011001	Rn>>8 → Rn	1	—
SHLL16	Rn	0100nnnn00101000	Rn<<16 → Rn	1	—
SHLR16	Rn	0100nnnn00101001	Rn>>16 → Rn	1	—

Table 2.16 Branch Instructions

Instruction	Instruction Code	Operation	Exec. Cycles	T Bit
BF label	10001011dddddddd	If T = 0, disp × 2 + PC → PC; if T = 1, NOP	3/1*	—
BF/S label	10001111dddddddd	Delayed branch, if T = 0, disp × 2 + PC → PC; if T = 1, NOP	3/1*	—
BT label	10001001dddddddd	If T = 1, disp × 2 + PC → PC; if T = 0, NOP	3/1*	—
BT/S label	10001101dddddddd	Delayed branch, if T = 1, disp × 2 + PC → PC; if T = 0, NOP	2/1*	—
BRA label	1010dddddddddddd	Delayed branch, disp × 2 + PC → PC	2	—
BRAF Rm	0000mmmm00100011	Delayed branch, Rm + PC → PC	2	—
BSR label	1011dddddddddddd	Delayed branch, PC → PR, disp × 2 + PC → PC	2	—
BSRF Rm	0000mmmm00000011	Delayed branch, PC → PR, Rm + PC → PC	2	—
JMP @Rm	0100mmmm00101011	Delayed branch, Rm → PC	2	—
JSR @Rm	0100mmmm00001011	Delayed branch, PC → PR, Rm → PC	2	—
RTS	0000000000001011	Delayed branch, PR → PC	2	—

Note: One state when it does not branch.

Table 2.17 System Control Instructions

Instruction	Instruction Code	Operation	Exec. Cycles	T Bit
CLRT	0000000000001000	0 → T	1	0
CLRMAC	0000000000101000	0 → MACH, MACL	1	—
LDC Rm,SR	0100mmmm00001110	Rm → SR	1	LSB
LDC Rm,GBR	0100mmmm00011110	Rm → GBR	1	—
LDC Rm,VBR	0100mmmm00101110	Rm → VBR	1	—
LDC.L @Rm+,SR	0100mmmm00000111	(Rm) → SR, Rm + 4 → Rm	3	LSB
LDC.L @Rm+,GBR	0100mmmm00010111	(Rm) → GBR, Rm + 4 → Rm	3	—
LDC.L @Rm+,VBR	0100mmmm00100111	(Rm) → VBR, Rm + 4 → Rm	3	—
LDS Rm,MACH	0100mmmm00001010	Rm → MACH	1	—
LDS Rm,MACL	0100mmmm00011010	Rm → MACL	1	—
LDS Rm,PR	0100mmmm00101010	Rm → PR	1	—
LDS.L @Rm+,MACH	0100mmmm00000110	(Rm) → MACH, Rm + 4 → Rm	1	—
LDS.L @Rm+,MACL	0100mmmm00010110	(Rm) → MACL, Rm + 4 → Rm	1	—
LDS.L @Rm+,PR	0100mmmm00100110	(Rm) → PR, Rm + 4 → Rm	1	—
NOP	0000000000001001	No operation	1	—
RTE	0000000000101011	Delayed branch, stack area → PC/SR	4	—
SETT	0000000000011000	1 → T	1	1
SLEEP	0000000000011011	Sleep	3*	—
STC SR,Rn	0000nnnn00000010	SR → Rn	1	—
STC GBR,Rn	0000nnnn00010010	GBR → Rn	1	—
STC VBR,Rn	0000nnnn00100010	VBR → Rn	1	—
STC.L SR,@-Rn	0100nnnn00000011	Rn – 4 → Rn, SR → (Rn)	2	—
STC.L GBR,@-Rn	0100nnnn00010011	Rn – 4 → Rn, GBR → (Rn)	2	—
STC.L VBR,@-Rn	0100nnnn00100011	Rn – 4 → Rn, BR → (Rn)	2	—
STS MACH,Rn	0000nnnn00001010	MACH → Rn	1	—
STS MACL,Rn	0000nnnn00011010	MACL → Rn	1	—
STS PR,Rn	0000nnnn00101010	PR → Rn	1	—

Instruction	Instruction Code	Operation	Exec. Cycles	T Bit
STS.L MACH,@-Rn	0100nnnn00000010	Rn – 4 → Rn, MACH → (Rn)	1	—
STS.L MACL,@-Rn	0100nnnn00010010	Rn – 4 → Rn, MACL → (Rn)	1	—
STS.L PR,@-Rn	0100nnnn00100010	Rn – 4 → Rn, PR → (Rn)	1	—
TRAPA #imm	11000011iiiiiiii	PC/SR → stack area, (imm) → PC	8	—

Note: The number of execution cycles before the chip enters sleep mode: The execution cycles shown in the table are minimums. The actual number of cycles may be increased when (1) contention occurs between instruction fetches and data access, or (2) when the destination register of the load instruction (memory → register) and the register used by the next instruction are the same.

2.5 Processing States

2.5.1 State Transitions

The CPU has four processing states: reset, exception processing, program execution and power-down. Figure 2.6 shows the transitions between the states.

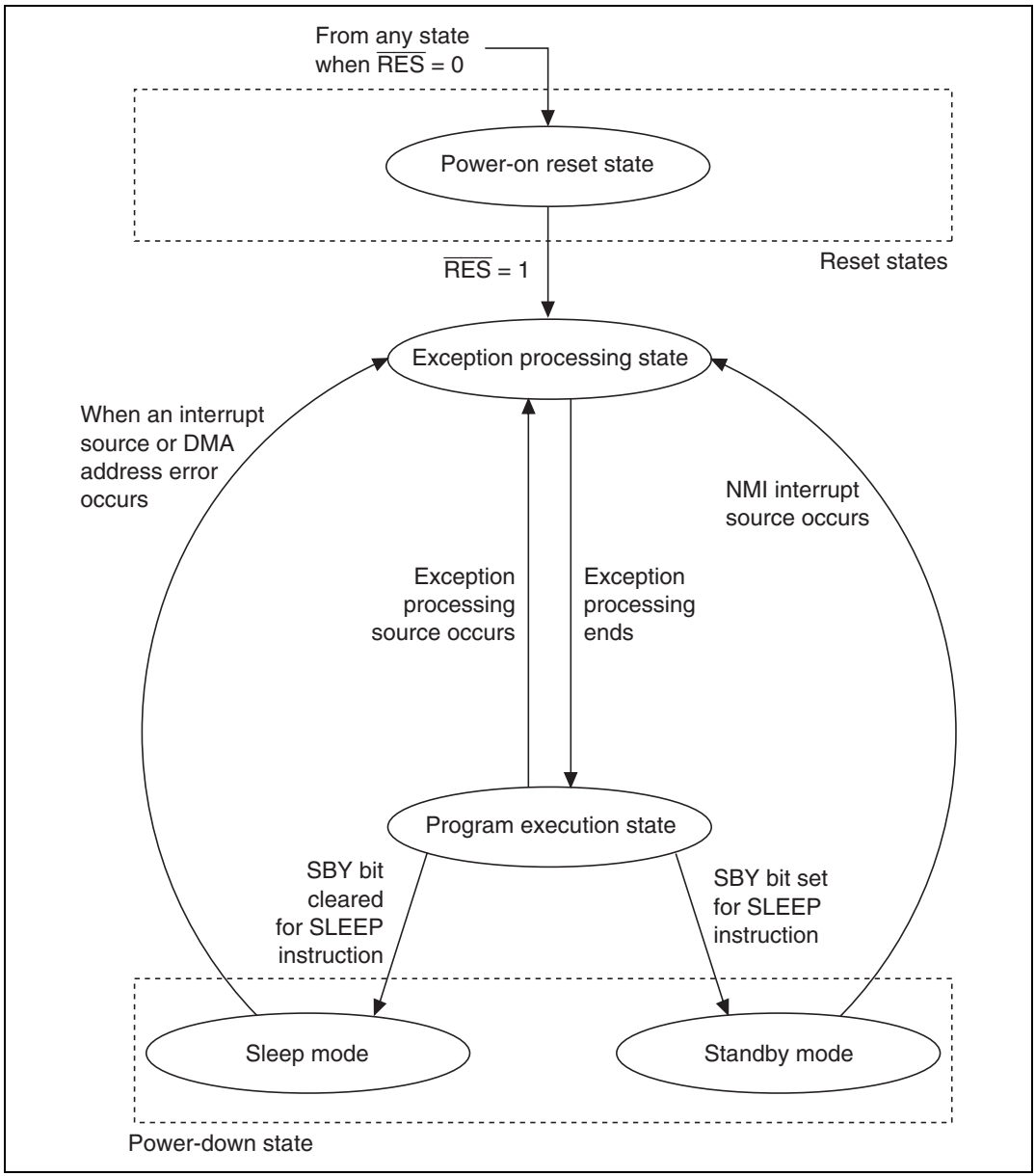

Figure 2.6 Transitions between Processing States

Reset State: The CPU resets in the reset state. When the $\overline{\text{RES}}$ pin level goes low, a power-on reset results.

Exception Processing State: The exception processing state is a transient state that occurs when exception processing sources such as resets or interrupts alter the CPU's processing state flow.

For a reset, the initial values of the program counter (PC) (execution start address) and stack pointer (SP) are fetched from the exception processing vector table and stored; the CPU then branches to the execution start address and execution of the program begins.

For an interrupt, the stack pointer (SP) is accessed and the program counter (PC) and status register (SR) are saved to the stack area. The exception service routine start address is fetched from the exception processing vector table; the CPU then branches to that address and the program starts executing, thereby entering the program execution state.

Program Execution State: In the program execution state, the CPU sequentially executes the program.

Power-Down State: In the power-down state, the CPU operation halts and power consumption declines. The SLEEP instruction places the CPU in the power-down state. This state has two modes: sleep mode and standby mode.

2.5.2 Power-Down State

Besides the ordinary program execution states, the CPU also has a power-down state in which CPU operation halts, lowering power consumption. There are two power-down state modes: sleep mode and standby mode.

Sleep Mode: When standby bit SBY (in the standby control register SBYCR) is cleared to 0 and a SLEEP instruction executed, the CPU moves from program execution state to sleep mode. In the sleep mode, the CPU halts and the contents of its internal registers and the data in on-chip cache (or on-chip RAM) is maintained. The on-chip peripheral modules other than the CPU do not halt in the sleep mode.

To return from sleep mode, use a power-on reset, any interrupt, or a DMA address error; the CPU returns to the ordinary program execution state through the exception processing state.

Standby Mode: To enter the standby mode, set the standby bit SBY (in the standby control register SBYCR) to 1 and execute a SLEEP instruction. In standby mode, all CPU, on-chip peripheral module, and oscillator functions are halted. However, when entering standby mode, the DMA master enable bit of the DMAC should be set to 0. If multiplication-related instructions are being executed at the time of entry into standby mode, the values of MACH and MACL will become undefined.

To return from standby mode, use a power-on reset or an NMI interrupt. For resets, the CPU returns to ordinary program execution state through the exception processing state when placed in a reset state for the duration of the oscillator stabilization time. For NMI interrupts, the CPU returns to ordinary program execution state through the exception processing state after the oscillator stabilization time has elapsed. In this mode, power consumption drops markedly, since the oscillator stops (table 2.18).

Table 2.18 Power-Down State

		State						
Mode	**Transition Conditions**	**Clock**	**CPU**	**On-Chip Peripheral Modules**	**CPU Registers**	**On-Chip Cache or On-Chip RAM**	**I/O Port Pins**	**Canceling**
Sleep	Execute SLEEP instruction with SBY bit cleared to 0 in SBYCR	Run	Halt	Run	Held	Held	Held	• Interrupt • DMA address error • Power-on reset
Stand-by	Execute SLEEP instruction with SBY bit set to 1 in SBYCR	Halt	Halt	Halt and initialize*	Held	Held	Held or Hi-Z (select-able)	• NMI interrupt • Power-on reset

Note: * Differs depending on the peripheral module and pin.

Section 3 Operating Modes

3.1 Operating Modes, Types, and Selection

This LSI has five operating modes and three clock modes, determined by the setting of the mode pins (MD3 to MD0). Do not change the mode pin settings during LSI operation (while power is on).

Table 3.1 indicates the setting method for the operating mode.

Table 3.1 Operating Mode Setting

Mode No.	Pin Setting FWP	MD3*1	MD2*1	MD1	MD0	Mode Name	On-Chip ROM	CS0 Area
0	1	x	x	0	0	MCU mode 0	Not Active	8-bit space
1	1	x	x	0	1	MCU mode 1	Not Active	16-bit space
2*4	1	x	x	1	0	MCU mode 2	Active	8/16-bit space*2
3*4	1	x	x	1	1	Single chip mode	Active	—
	0	x	x	0	0	Boot mode*3	Active	8/16-bit space*2
	0	x	x	0	1			—
	0	x	x	1	0	User programming mode*3	Active	8/16-bit space*2
	0	x	x	1	1			—
	1	1	1	0	1	Flash programmer mode*3	Active	—

Notes: 1. MD2 and MD3 pins select the clock mode in modes 0 to 3 (table 3.2).
2. Set by BCR1 of BSC.
3. Only F-ZTAT.
4. Only SH7016, SH7017.

Table 3.2 indicates the setting method for the clock mode.

Table 3.2 Clock Mode Setting

MD3	MD2	Clock Mode
0	0	PLL ON × 1
0	1	PLL ON × 2
1	0	PLL ON × 4
1	1	Reserved

3.2 Explanation of Operating Modes

Table 3.3 describes the operating modes.

Table 3.3 Operating Modes

Mode	Description
(MCU) Mode 0	CS0 area becomes an external memory space with 8-bit bus width.
(MCU) Mode 1	CS0 area becomes an external memory space with 16-bit bus width.
(MCU) Mode 2	The on-chip ROM becomes effective. The bus width for the on-chip ROM space is 32 bit.
Mode 3 (single chip mode)	Any port can be used, but external addresses can not be employed.
Clock mode	The input waveform frequency can be used as is, doubled or quadrupled as an internal clock in modes 0 to 3.

3.3 Pin Configuration

Table 3.4 describes the function of each operating mode related pin.

Table 3.4 Operating Mode Pin Function

Pin Name	Input/Output	Function
XTAL	Input	Connects to a crystal oscillator
EXTAL	Input	Connects to a crystal oscillator, or used for external clock input pin
PLLCAP	Input	Connects to a capacitor for PLL circuit operation
MD0	Input	Designates operating mode through the level applied to this pin
MD1	Input	Designates operating mode through the level applied to this pin
MD2	Input	Designates clock mode through the level applied to this pin
MD3	Input	Designates clock mode through the level applied to this pin

Section 4 Clock Pulse Generator (CPG)

4.1 Overview

This LSI has an on-chip clock pulse generator (CPG) that generates the system clock (ϕ), as well as the internal clock (ϕ/2 to ϕ/8192). The CPG consists of an oscillator, a PLL, and a prescaler.

4.1.1 Block Diagram

A block diagram of the clock pulse generator is shown in figure 4.1.

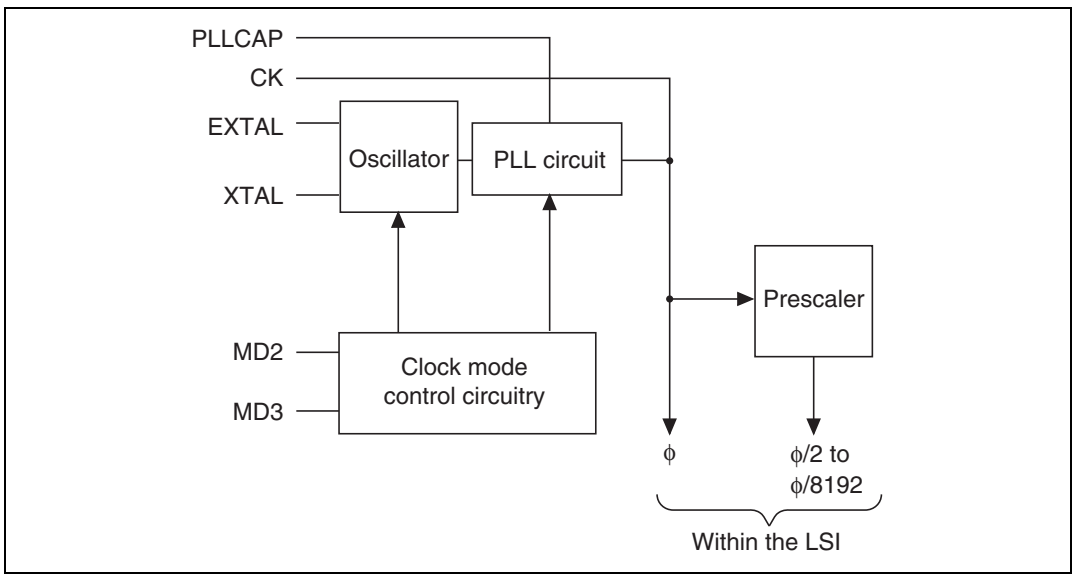

Figure 4.1 Block Diagram of the Clock Pulse Generator

4.2 Oscillator

Clock pulses can be supplied from a connected crystal resonator or an external clock.

4.2.1 Connecting a Crystal Oscillator

Circuit Configuration: A crystal oscillator can be connected as shown in figure 4.2. Use the damping resistance (Rd) listed in table 4.1. Use a 4 to 10 MHz crystal oscillator (consult your dealer concerning the compatibility of the crystal oscillator and the LSI).

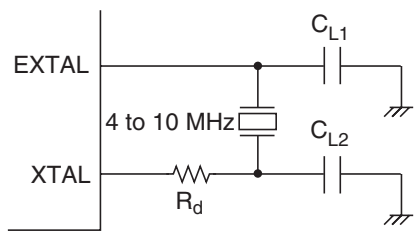

$C_{L1} = C_{L2}$ = 18 to 22 pF (Recommended value)

Figure 4.2 Connection of the Crystal Oscillator (Example)

Table 4.1 Damping Resistance Values (Recommended Values)

	Frequency (MHz)		
Parameter	**4**	**8**	**10**
Rd (Ω)	500	200	0

Crystal Oscillator: Figure 4.3 shows an equivalent circuit of the crystal oscillator. Use a crystal oscillator with the characteristics listed in table 4.2.

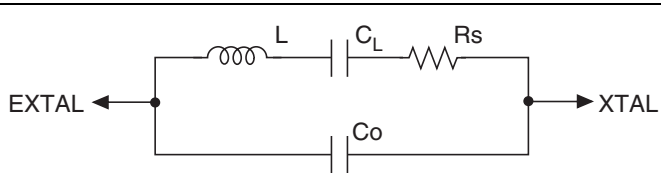

Figure 4.3 Crystal Oscillator Equivalent Circuit

Table 4.2 Crystal Oscillator Parameters

	Frequency (MHz)		
Parameter	**4**	**8**	**10**
Rs max (Ω)	120	80	60
Co max (pF)	7	7	7

Notes on Board Design: When connecting a crystal oscillator, observe the following precautions:

- To prevent induction from interfering with correct oscillation, do not route any signal lines near the oscillator circuitry.
- When designing the board, place the crystal oscillator and its load capacitors as close as possible to the XTAL and EXTAL pins.

Figures 4.4 and 4.5 show the precautions regarding oscillator block board settings.

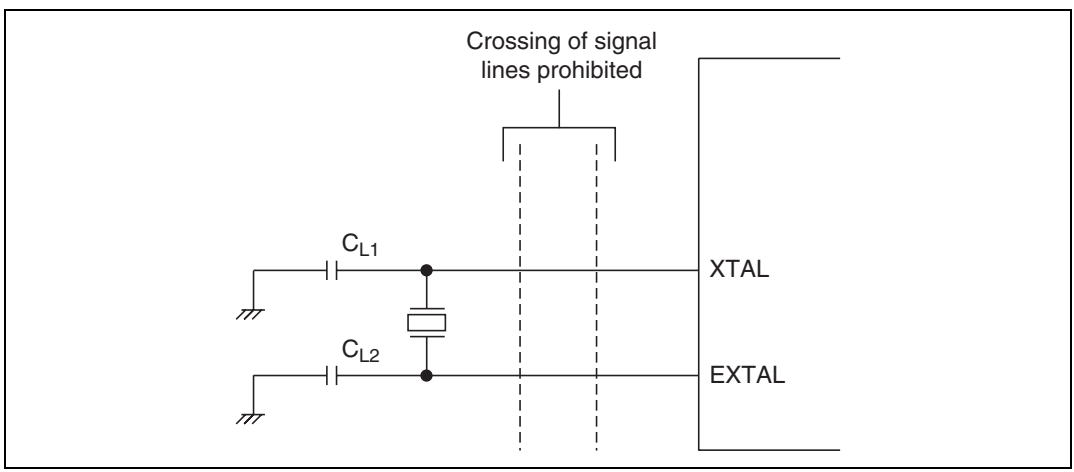

Figure 4.4 Cautions for Oscillator Circuit System Board Design

External circuitry such as that shown in figure 4.5 is recommended around the PLL.

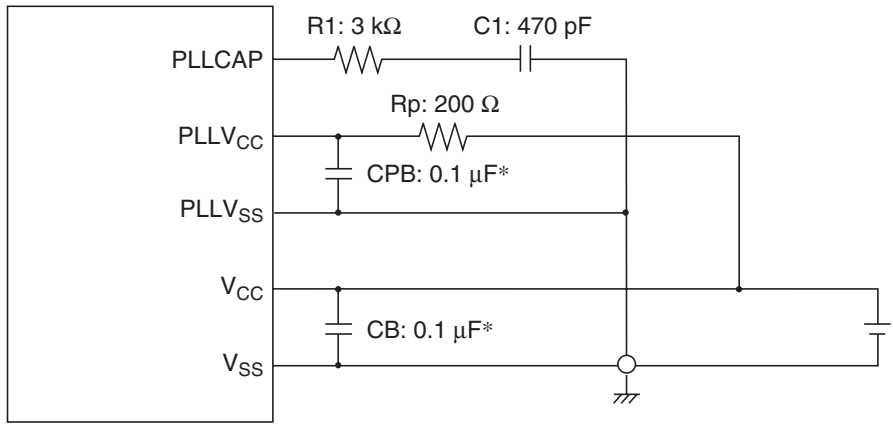

Note: * CB and CPB are laminated ceramic capacitors (Recommended values)

Figure 4.5 Cautions for Use of PLL Oscillator Circuit

Place oscillation stabilization capacitor C1 and resistor R1 near the PLL CAP pin, and ensure that these lines do not cross any other signal lines. Supply the C1 ground from PLL V_{SS}.

Also, separate PLL V_{CC} and PLL V_{SS}, and the other V_{CC} and V_{SS} pins, from the board power supply source, and be sure to insert bypass capacitors CPB and CB close to the pins.

4.2.2 External Clock Input Method

Figure 4.6 shows an example of an external clock input connection. In this case, make the external clock high level to stop it when in standby mode. During operation, make the external input clock frequency 4 to 10 MHz.

When leaving the XTAL pin open, make sure the parasitic capacitance is less than 10 pF.

Even when inputting an external clock, be sure to delay until after the oscillation stabilization time (upon power-on) or after release from standby, in order to ensure the PLL stabilization time.

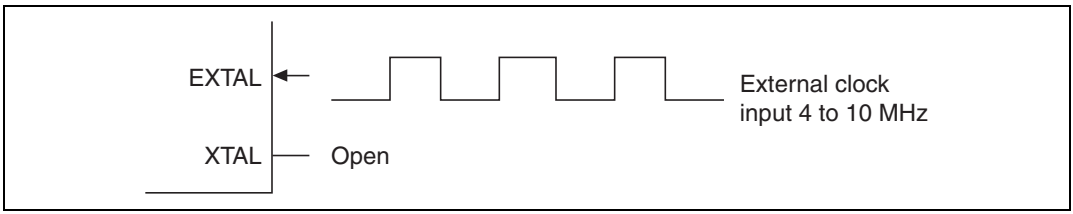

Figure 4.6 Example of External Clock Connection

4.3 Prescaler

The prescaler divides the system clock (ϕ) to generate an internal clock (ϕ/2 to ϕ/8192) for supply to peripheral modules.

Section 5 Exception Processing

5.1 Overview

5.1.1 Types of Exception Processing and Priority

Exception processing is started by four sources: resets, address errors, interrupts and instructions and have the priority shown in table 5.1. When several exception processing sources occur at once, they are processed according to the priority shown.

Table 5.1 Types of Exception Processing and Priority Order

Exception	Source	Priority
Reset	Power-on reset	High
Address error	CPU address error	↑
	DMAC address error	
Interrupt	NMI	
	User break	
	IRQ	
	On-chip peripheral modules: • Direct memory access controller (DMAC) • Multifunction timer/pulse unit (MTU) • Serial communication interface (SCI) • A/D converter (A/D) • Compare match timer (CMT) • Watchdog timer (WDT) • Bus state controller (BSC)	
Instructions	Trap instruction (TRAPA instruction)	
	General illegal instructions (undefined code)	↓
	Illegal slot instructions (undefined code placed directly after a delay branch instruction*1 or instructions that rewrite the PC*2)	Low

Notes: 1. Delayed branch instructions: JMP, JSR, BRA, BSR, RTS, RTE, BF/S, BT/S, BSRF, BRAF.

2. Instructions that rewrite the PC: JMP, JSR, BRA, BSR, RTS, RTE, BT, BF, TRAPA, BF/S, BT/S, BSRF, BRAF.

5.1.2 Exception Processing Operations

The exception processing sources are detected and begin processing according to the timing shown in table 5.2.

Table 5.2 Timing of Exception Source Detection and the Start of Exception Processing

Exception	Source	Timing of Source Detection and Start of Processing
Power-on reset		Starts when the $\overline{\text{RES}}$ pin changes from low to high.
Address error		Detected when instruction is decoded and starts when the previous executing instruction finishes executing.
Interrupts		Detected when instruction is decoded and starts when the previous executing instruction finishes executing.
Instructions	Trap instruction	Starts from the execution of a TRAPA instruction.
	General illegal instructions	Starts from the decoding of undefined code anytime except after a delayed branch instruction (delay slot).
	Illegal slot instructions	Starts from the decoding of undefined code placed in a delayed branch instruction (delay slot) or of instructions that rewrite the PC.

When exception processing starts, the CPU operates as follows:

1. Exception processing triggered by reset:

   The initial values of the program counter (PC) and stack pointer (SP) are fetched from the exception processing vector table (PC and SP are respectively the H'00000000 and H'00000004 addresses). See section 5.1.3, Exception Processing Vector Table, for more information. 0 is then written to the vector base register (VBR) and 1111 is written to the interrupt mask bits (I3 to I0) of the status register (SR). The program begins running from the PC address fetched from the exception processing vector table.
2. Exception processing triggered by address errors, interrupts and instructions:

   SR and PC are saved to the stack indicated by R15. For interrupt exception processing, the interrupt priority level is written to the SR's interrupt mask bits (I3 to I0). For address error and instruction exception processing, the I3 to I0 bits are not affected. The start address is then fetched from the exception processing vector table and the program begins running from that address.

5.1.3 Exception Processing Vector Table

Before exception processing begins running, the exception processing vector table must be set in memory. The exception processing vector table stores the start addresses of exception service routines. (The reset exception processing table holds the initial values of PC and SP.)

All exception sources are given different vector numbers and vector table address offsets, from which the vector table addresses are calculated. During exception processing, the start addresses of the exception service routines are fetched from the exception processing vector table, which indicated by this vector table address.

Table 5.3 shows the vector numbers and vector table address offsets. Table 5.4 shows how vector table addresses are calculated.

Table 5.3 Exception Processing Vector Table

Exception Sources		Vector Numbers	Vector Table Address Offset
Power-on reset	PC	0	H'00000000 to H'00000003
	SP	1	H'00000004 to H'00000007
(Reserved by system)		2	H'00000008 to H'0000000B
(Reserved by system)		3	H'0000000C to H'0000000F
General illegal instruction		4	H'00000010 to H'00000013
(Reserved by system)		5	H'00000014 to H'00000017
Slot illegal instruction		6	H'00000018 to H'0000001B
(Reserved by system)		7	H'0000001C to H'0000001F
(Reserved by system)		8	H'00000020 to H'00000023
CPU address error		9	H'00000024 to H'00000027
DMAC address error		10	H'00000028 to H'0000002B
Interrupts	NMI	11	H'0000002C to H'0000002F
	User break	12	H'00000030 to H'00000033
(Reserved by system)		13	H'00000034 to H'00000037
		:	:
		31	H'0000007C to H'0000007F
Trap instruction (user vector)		32	H'00000080 to H'00000083
		:	:
		63	H'000000FC to H'000000FF

Exception Sources		Vector Numbers	Vector Table Address Offset
Interrupts	IRQ0	64	H'00000100 to H'00000103
	IRQ1	65	H'00000104 to H'00000107
	IRQ2	66	H'00000108 to H'0000010B
	IRQ3	67	H'0000010C to H'0000010F
(Reserved by system)		68	H'00000110 to H'00000113
(Reserved by system)		69	H'00000114 to H'00000117
Interrupt	IRQ6	70	H'00000118 to H'0000011B
	IRQ7	71	H'0000011C to H'0000011F
On-chip peripheral module*		72	H'00000120 to H'00000124
		:	:
		255	H'000003FC to H'000003FF

Note: * The vector numbers and vector table address offsets for each on-chip peripheral module interrupt are given in section 6, Interrupt Controller, and table 6.3, Interrupt Exception Processing Vectors and Priorities.

Table 5.4 Calculating Exception Processing Vector Table Addresses

Exception Source	Vector Table Address Calculation
Resets	Vector table address = (vector table address offset) = (vector number) × 4
Address errors, interrupts, instructions	Vector table address = VBR + (vector table address offset) = VBR + (vector number) × 4

Notes: 1. VBR: Vector base register
2. Vector table address offset: See table 5.3.
3. Vector number: See table 5.3.

5.2 Resets

5.2.1 Power-on Reset

When the $\overline{\text{RES}}$ pin is driven low, the LSI does a power-on reset. To reliably reset the LSI, the $\overline{\text{RES}}$ pin should be kept at low for at least the duration of the oscillation settling time when applying power or when in standby mode (when the clock circuit is halted) or at least 20 t_{cyc} (when the clock circuit is running). During power-on reset, CPU internal status and all registers of on-chip peripheral modules are initialized. See Appendix B, Pin Status, for the status of individual pins during the power-on reset status.

In the power-on reset status, power-on reset exception processing starts when the $\overline{\text{RES}}$ pin is first driven low for a set period of time and then returned to high. The CPU will then operate as follows:

1. The initial value (execution start address) of the program counter (PC) is fetched from the exception processing vector table.
2. The initial value of the stack pointer (SP) is fetched from the exception processing vector table.
3. The vector base register (VBR) is cleared to H'00000000 and the interrupt mask bits (I3 to I0) of the status register (SR) are set to H'F (1111).
4. The values fetched from the exception processing vector table are set in the program counter (PC) and SP and the program begins executing.

Be certain to always perform power-on reset processing when turning the system power on.

5.3 Address Errors

5.3.1 Address Error Sources

Address errors occur when instructions are fetched or data read or written, as shown in table 5.5.

Table 5.5 Bus Cycles and Address Errors

Bus Cycle			
Type	**Bus Master**	**Bus Cycle Description**	**Address Errors**
Instruction fetch	CPU	Instruction fetched from even address	None (normal)
		Instruction fetched from odd address	Address error occurs
		Instruction fetched from other than on-chip peripheral module space*	None (normal)
		Instruction fetched from on-chip peripheral module space*	Address error occurs
		Instruction fetched from external memory space when in single chip mode	Address error occurs
Data read/write	CPU or DMAC	Word data accessed from even address	None (normal)
		Word data accessed from odd address	Address error occurs
		Longword data accessed from a longword boundary	None (normal)
		Longword data accessed from other than a long-word boundary	Address error occurs
		Byte or word data accessed in on-chip peripheral module space*	None (normal)
		Longword data accessed in 16-bit on-chip peripheral module space*	None (normal)
		Longword data accessed in 8-bit on-chip peripheral module space*	Address error occurs
		External memory space accessed in single-chip mode	Address error occurs

Note: * See section 8, Bus State Controller.

5.3.2 Address Error Exception Processing

When an address error occurs, the bus cycle in which the address error occurred ends. When the executing instruction then finishes, address error exception processing starts up. The CPU operates as follows:

1. The status register (SR) is saved to the stack.
2. The program counter (PC) is saved to the stack. The PC value saved is the start address of the instruction to be executed after the last executed instruction.
3. The exception service routine start address is fetched from the exception processing vector table that corresponds to the address error that occurred and the program starts executing from that address. The jump that occurs is not a delayed branch.

5.4 Interrupts

5.4.1 Interrupt Sources

Table 5.6 shows the sources that start up interrupt exception processing. These are divided into NMI, IRQ and on-chip peripheral modules.

Table 5.6 Interrupt Sources

Type	Request Source	Number of Sources
NMI	NMI pin (external input)	1
IRQ	$\overline{\text{IRQ0}}$ to $\overline{\text{IRQ3}}$, $\overline{\text{IRQ6}}$, $\overline{\text{IRQ7}}$ (external input)	6
On-chip peripheral module	Direct memory access controller (DMAC)	2
	Multifunction timer pulse unit (MTU)	13
	Serial communication interface (SCI)	8
	A/D converter	1
	Compare match timer (CMT)	2
	Watchdog timer (WDT)	1
	Bus state controller (BSC)	1

Each interrupt source is allocated a different vector number and vector table offset. See section 6, Interrupt Controller, and table 6.3, Interrupt Exception Processing Vectors and Priorities, for more information on vector numbers and vector table address offsets.

5.4.2 Interrupt Priority Level

The interrupt priority order is predetermined. When multiple interrupts occur simultaneously (overlap), the interrupt controller (INTC) determines their relative priorities and starts up processing according to the results.

The priority order of interrupts is expressed as priority levels 0 to 16, with priority 0 the lowest and priority 16 the highest. The NMI interrupt has priority 16 and cannot be masked, so it is always accepted. IRQ interrupts and on-chip peripheral module interrupt priority levels can be set freely using the INTC's interrupt priority level setting registers A through H (IPRA to IPRH) as shown in table 5.7. The priority levels that can be set are 0 to 15. Level 16 cannot be set. See section 6.3.1, Interrupt Priority Registers A to H (IPRA to IPRH), for more information on IPRA to IPRH.

Table 5.7 Interrupt Priority Order

Type	Priority Level	Comment
NMI	16	Fixed priority level. Cannot be masked.
IRQ	0 to 15	Set with interrupt priority level setting registers A through H (IPRA to IPRH).
On-chip peripheral module	0 to 15	Set with interrupt priority level setting registers A through H (IPRA to IPRH).

5.4.3 Interrupt Exception Processing

When an interrupt occurs, its priority level is ascertained by the interrupt controller (INTC). NMI is always accepted, but other interrupts are only accepted if they have a priority level higher than the priority level set in the interrupt mask bits (I3 to I0) of the status register (SR).

When an interrupt is accepted, exception processing begins. In interrupt exception processing, the CPU saves SR and the program counter (PC) to the stack. The priority level value of the accepted interrupt is written to SR bits I3 to I0. For NMI, however, the priority level is 16, but the value set in I3 to I0 is H'F (level 15). Next, the start address of the exception service routine is fetched from the exception processing vector table for the accepted interrupt, that address is jumped to and execution begins. See section 6.4, Interrupt Operation, for more information on the interrupt exception processing.

5.5 Exceptions Triggered by Instructions

5.5.1 Types of Exceptions Triggered by Instructions

Exception processing can be triggered by trap instructions, general illegal instructions, and illegal slot instructions, as shown in table 5.8.

Table 5.8 Types of Exceptions Triggered by Instructions

Type	Source Instruction	Comment
Trap instructions	TRAPA	—
Illegal slot instructions	Undefined code placed immediately after a delayed branch instruction (delay slot) and instructions that rewrite the PC	Delayed branch instructions: JMP, JSR, BRA, BSR, RTS, RTE, BF/S, BT/S, BSRF, BRAF Instructions that rewrite the PC: JMP, JSR, BRA, BSR, RTS, RTE, BT, BF, TRAPA, BF/S, BT/S, BSRF, BRAF
General illegal instructions	Undefined code anywhere besides in a delay slot	—

5.5.2 Trap Instructions

When a TRAPA instruction is executed, trap instruction exception processing starts up. The CPU operates as follows:

1. The status register (SR) is saved to the stack.
2. The program counter (PC) is saved to the stack. The PC value saved is the start address of the instruction to be executed after the TRAPA instruction.
3. The exception service routine start address is fetched from the exception processing vector table that corresponds to the vector number specified in the TRAPA instruction. That address is jumped to and the program starts executing. The jump that occurs is not a delayed branch.

5.5.3 Illegal Slot Instructions

An instruction placed immediately after a delayed branch instruction is said to be placed in a delay slot. When the instruction placed in the delay slot is undefined code, illegal slot exception processing starts up when that undefined code is decoded. Illegal slot exception processing also starts up when an instruction that rewrites the program counter (PC) is placed in a delay slot. The processing starts when the instruction is decoded. The CPU handles an illegal slot instruction as follows:

1. The status register (SR) is saved to the stack.
2. The program counter (PC) is saved to the stack. The PC value saved is the jump address of the delayed branch instruction immediately before the undefined code or the instruction that rewrites the PC.
3. The exception service routine start address is fetched from the exception processing vector table that corresponds to the exception that occurred. That address is jumped to and the program starts executing. The jump that occurs is not a delayed branch.

5.5.4 General Illegal Instructions

When undefined code placed anywhere other than immediately after a delayed branch instruction (i.e., in a delay slot) is decoded, general illegal instruction exception processing starts up. The CPU handles general illegal instructions the same as illegal slot instructions. Unlike processing of illegal slot instructions, however, the program counter value stored is the start address of the undefined code.

5.6 When Exception Sources Are Not Accepted

When an address error or interrupt is generated after a delayed branch instruction or interrupt-disabled instruction, it is sometimes not accepted immediately but stored instead, as shown in table 5.9. When this happens, it will be accepted when an instruction that can accept the exception is decoded.

Table 5.9 Generation of Exception Sources Immediately after a Delayed Branch Instruction or Interrupt-Disabled Instruction

	Exception Source	
Point of Occurrence	**Address Error**	**Interrupt**
Immediately after a delayed branch instruction*1	Not accepted	Not accepted
Immediately after an interrupt-disabled instruction*2	Accepted	Not accepted

Notes: 1. Delayed branch instructions: JMP, JSR, BRA, BSR, RTS, RTE, BF/S, BT/S, BSRF, BRAF
2. Interrupt-disabled instructions: LDC, LDC.L, STC, STC.L, LDS, LDS.L, STS, STS.L

5.6.1 Immediately after a Delayed Branch Instruction

When an instruction placed immediately after a delayed branch instruction (delay slot) is decoded, neither address errors nor interrupts are accepted. The delayed branch instruction and the instruction located immediately after it (delay slot) are always executed consecutively, so no exception processing occurs during this period.

5.6.2 Immediately after an Interrupt-Disabled Instruction

When an instruction immediately following an interrupt-disabled instruction is decoded, interrupts are not accepted. Address errors are accepted.

5.7 Stack Status after Exception Processing Ends

The status of the stack after exception processing ends is as shown in table 5.10.

Table 5.10 Types of Stack Status After Exception Processing Ends

Types	Stack Status
Address error	SP → Address of instruction after executed instruction (32 bits); SR (32 bits)
Trap instruction	SP → Address of instruction after TRAPA instruction (32 bits); SR (32 bits)
General illegal instruction	SP → Start address of illegal instruction (32 bits); SR (32 bits)
Interrupt	SP → Address of instruction after executed instruction (32 bits); SR (32 bits)
Illegal slot instruction	SP → Jump destination address of delay branch instruction (32 bits); SR (32 bits)

5.8 Usage Notes

5.8.1 Value of Stack Pointer (SP)

The value of the stack pointer must always be a multiple of four. If it is not, an address error will occur when the stack is accessed during exception processing.

5.8.2 Value of Vector Base Register (VBR)

The value of the vector base register must always be a multiple of four. If it is not, an address error will occur when the stack is accessed during exception processing.

5.8.3 Address Errors Caused by Stacking of Address Error Exception Processing

When the stack pointer is not a multiple of four, an address error will occur during stacking of the exception processing (interrupts, etc.) and address error exception processing will start up as soon as the first exception processing is ended. Address errors will then also occur in the stacking for this address error exception processing. To ensure that address error exception processing does not go into an endless loop, no address errors are accepted at that point. This allows program control to be shifted to the address error exception service routine and enables error processing.

When an address error occurs during exception processing stacking, the stacking bus cycle (write) is executed. During stacking of the status register (SR) and program counter (PC), the SP is –4 for both, so the value of SP will not be a multiple of four after the stacking either. The address value output during stacking is the SP value, so the address where the error occurred is itself output. This means the write data stacked will be undefined.

Section 6 Interrupt Controller (INTC)

6.1 Overview

The interrupt controller (INTC) ascertains the priority of interrupt sources and controls interrupt requests to the CPU. The INTC has registers for setting the priority of each interrupt which can be used by the user to order the priorities in which the interrupt requests are processed.

6.1.1 Features

The INTC has the following features:

- 16 levels of interrupt priority: By setting the eight interrupt-priority level registers, the priorities of IRQ interrupts and on-chip peripheral module interrupts can be set in 16 levels for different request sources.
- NMI noise canceler function: NMI input level bits indicate the NMI pin status. By reading these bits with the interrupt exception service routine, the pin status can be confirmed, enabling it to be used as a noise canceler.

6.1.2 Block Diagram

Figure 6.1 is a block diagram of the INTC.

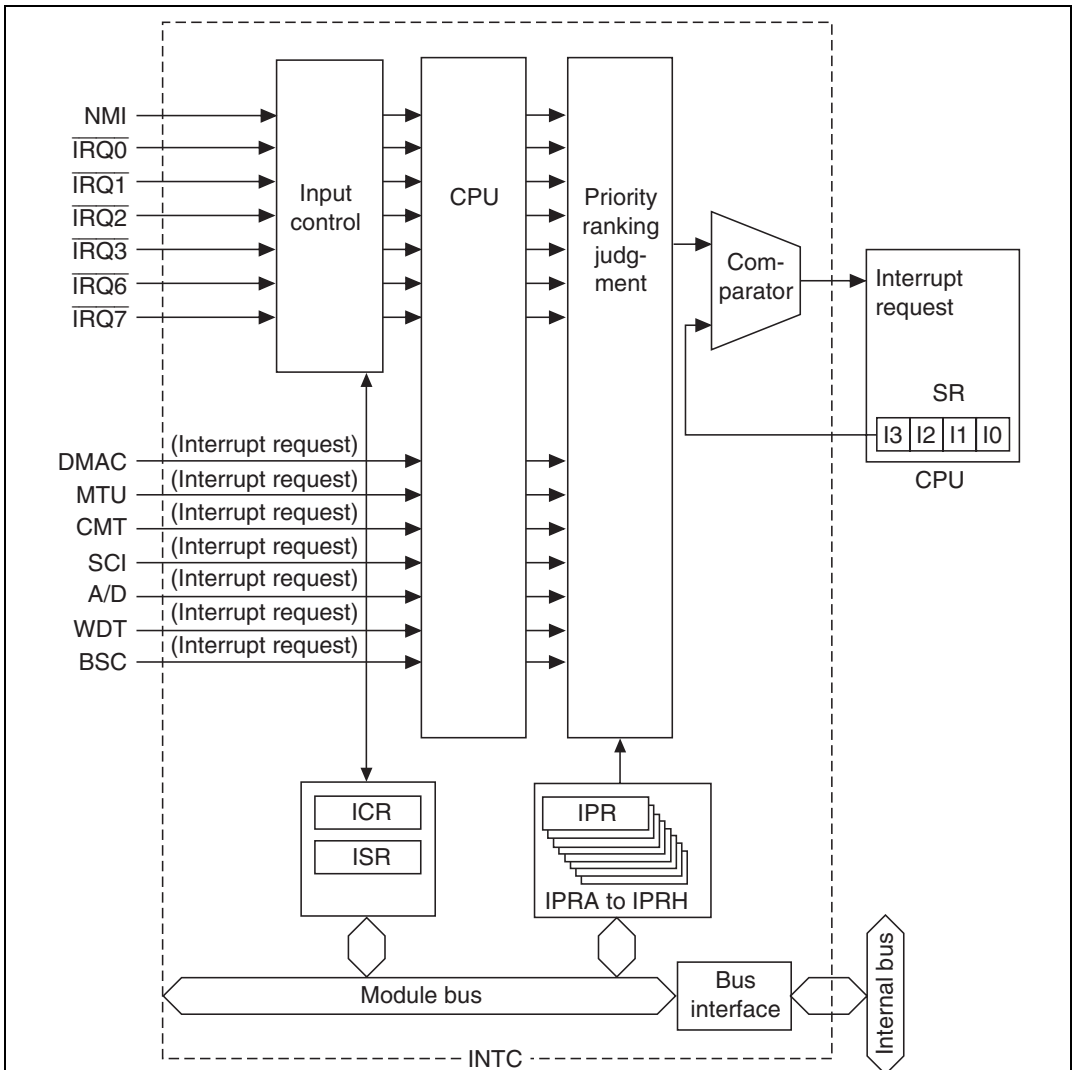

Legend:

DMAC:	Direct memory access controller	ICR:	Interrupt control register
MTU:	Multifunction timer pulse unit	ISR:	IRQ ststus register
CMT:	Compare match timer	IPRA to IPRH:	Interrupt priority registers A to H
SCI:	Serial communication interface		
A/D:	A/D converter	SR:	Status register
WDT:	Watchdog timer		
BSC:	Bus state controller (DRAM		

Figure 6.1 INTC Block Diagram

6.1.3 Pin Configuration

Table 6.1 shows the INTC pin configuration.

Table 6.1 Pin Configuration

Name	Abbreviation	I/O	Function
Non-maskable interrupt input pin	NMI	I	Input of non-maskable interrupt request signal
Interrupt request input pins	$\overline{IRQ0}$ to $\overline{IRQ3}$, $\overline{IRQ6}$, $\overline{IRQ7}$	I	Input of maskable interrupt request signals

6.1.4 Register Configuration

The INTC has the 10 registers shown in table 6.2. These registers set the priority of the interrupts and control external interrupt input signal detection.

Table 6.2 Register Configuration

Name	Abbr.	R/W	Initial Value	Address	Access Sizes
Interrupt priority register A	IPRA	R/W	H'0000	H'FFFF8348	8, 16, 32
Interrupt priority register B	IPRB	R/W	H'0000	H'FFFF834A	8, 16, 32
Interrupt priority register C	IPRC	R/W	H'0000	H'FFFF834C	8, 16, 32
Interrupt priority register D	IPRD	R/W	H'0000	H'FFFF834E	8, 16, 32
Interrupt priority register E	IPRE	R/W	H'0000	H'FFFF8350	8, 16, 32
Interrupt priority register F	IPRF	R/W	H'0000	H'FFFF8352	8, 16, 32
Interrupt priority register G	IPRG	R/W	H'0000	H'FFFF8354	8, 16, 32
Interrupt priority register H	IPRH	R/W	H'0000	H'FFFF8356	8, 16, 32
Interrupt control register	ICR	R/W	*1	H'FFFF8358	8, 16, 32
IRQ status register	ISR	R(W)*2	H'0000	H'FFFF835A	8, 16, 32

Notes: 1. The value when the NMI pin is high is H'8000; when the NMI pin is low, it is H'0000.
2. Only 0 can be written, in order to clear flags.

6.2 Interrupt Sources

There are three types of interrupt sources: NMI, IRQ, and on-chip peripheral modules. Each interrupt has a priority expressed as a priority level (0 to 16, with 0 the lowest and 16 the highest). Giving an interrupt a priority level of 0 masks it.

6.2.1 NMI Interrupts

The NMI interrupt has priority 16 and is always accepted. Input at the NMI pin is detected by edge. Use the NMI edge select bit (NMIE) in the interrupt control register (ICR) to select either the rising or falling edge. NMI interrupt exception processing sets the interrupt mask level bits (I3 to I0) in the status register (SR) to level 15.

6.2.2 IRQ Interrupts

IRQ interrupts are requested by input from pins $\overline{\text{IRQ0}}$ to $\overline{\text{IRQ3}}$, $\overline{\text{IRQ6}}$, $\overline{\text{IRQ7}}$. Set the IRQ sense select bits (IRQ0S to IRQ3S, IRQ6S, IRQ7S) of the interrupt control register (ICR) to select low level detection or falling edge detection for each pin. The priority level can be set from 0 to 15 for each pin using the interrupt priority registers A and B (IPRA and IPRB).

When IRQ interrupts are set to low level detection, an interrupt request signal is sent to the INTC during the period the IRQ pin is low level. Interrupt request signals are not sent to the INTC when the IRQ pin becomes high level. Interrupt request levels can be confirmed by reading the IRQ flags (IRQ0F to IRQ3F, IRQ6F, IRQ7F) of the IRQ status register (ISR).

When IRQ interrupts are set to falling edge detection, interrupt request signals are sent to the INTC upon detecting a change on the IRQ pin from high to low level. IRQ interrupt request detection results are maintained until the interrupt request is accepted. Confirmation that IRQ interrupt requests have been detected is possible by reading the IRQ flags (IRQ0F to IRQ3F, IRQ6F, IRQ7F) of the IRQ status register (ISR), and by writing a 0 after reading a 1, IRQ interrupt request detection results can be withdrawn.

In IRQ interrupt exception processing, the interrupt mask bits (I3 to I0) of the status register (SR) are set to the priority level value of the accepted IRQ interrupt.

6.2.3 On-Chip Peripheral Module Interrupts

On-chip peripheral module interrupts are interrupts generated by the following on-chip peripheral modules:

- Direct memory access controller (DMAC)
- Multifunction timer pulse unit (MTU)
- Compare match timer (CMT)
- Serial communication interface (SCI)
- A/D converter (A/D)
- Watchdog timer (WDT)
- Bus state controller (BSC)

A different interrupt vector is assigned to each interrupt source, so the exception service routine does not have to decide which interrupt has occurred. Priority levels between 0 and 15 can be assigned to individual on-chip peripheral modules in interrupt priority registers C to H (IPRC to IPRH).

On-chip peripheral module interrupt exception processing sets the interrupt mask level bits (I3 to I0) in the status register (SR) to the priority level value of the on-chip peripheral module interrupt that was accepted.

6.2.4 Interrupt Exception Vectors and Priority Rankings

Table 6.3 lists interrupt sources and their vector numbers, vector table address offsets and interrupt priorities.

Each interrupt source is allocated a different vector number and vector table address offset. Vector table addresses are calculated from vector numbers and address offsets. In interrupt exception processing, the exception service routine start address is fetched from the vector table indicated by the vector table address. See table 5.4, Calculating Exception Processing Vector Table Addresses.

IRQ interrupts and on-chip peripheral module interrupt priorities can be set freely between 0 and 15 for each pin or module by setting interrupt priority registers A to H (IPRA to IPRH). The ranking of interrupt sources for IPRC to IPRH, however, must be the order listed under Priority Order Within IPR Setting Range in table 6.3 and cannot be changed. A power-on reset assigns priority level 0 to IRQ interrupts and on-chip peripheral module interrupts. If the same priority level is assigned to two or more interrupt sources and interrupts from those sources occur simultaneously, their priority order is the default priority order indicated at the right in table 6.3.

Table 6.3 Interrupt Exception Processing Vectors and Priorities

Interrupt Source		Interrupt Vector: Vector No.	Interrupt Vector: Vector Table Address Offset	Interrupt Priority (Initial Value)	Corresponding IPR (Bits)	Priority within IPR Setting Range	Default Priority
NMI		11	H'0000002C to H'0000002F	16	—	—	High
IRQ0		64	H'00000100 to H'00000103	0 to 15 (0)	IPRA (15 to 12)	—	
IRQ1		65	H'00000104 to H'00000107	0 to 15 (0)	IPRA (11 to 8)	—	
IRQ2		66	H'00000108 to H'0000010B	0 to 15 (0)	IPRA (7 to 4)	—	
IRQ3		67	H'0000010C to H'0000010F	0 to 15 (0)	IPRA (3 to 0)	—	
IRQ6		70	H'00000118 to H'0000011B	0 to 15 (0)	IPRB (7 to 4)	—	
IRQ7		71	H'0000011C to H'0000011F	0 to 15 (0)	IPRB (3 to 0)	—	
DMAC0	DEI0	72	H'00000120 to H'00000123	0 to 15 (0)	IPRC (15 to 12)	—	
DMAC1	DEI1	76	H'00000130 to H'00000133	0 to 15 (0)	IPRC (11 to 8)	—	
MTU0	TGI0A	88	H'00000160 to H'00000163	0 to 15 (0)	IPRD (15 to 12)	High	
	TGI0B	89	H'00000164 to H'00000167	0 to 15 (0)			
	TGI0C	90	H'00000168 to H'0000016B	0 to 15 (0)			
	TGI0D	91	H'0000016C to H'0000016F	0 to 15 (0)		Low	
	TCI0V	92	H'00000170 to H'00000173	0 to 15 (0)	IPRD (11 to 8)	—	Low

Interrupt Source		Interrupt Vector: Vector No.	Interrupt Vector: Vector Table Address Offset	Interrupt Priority (Initial Value)	Corresponding IPR (Bits)	Priority within IPR Setting Range	Default Priority
MTU1	TGI1A	96	H'00000180 to H'00000183	0 to 15 (0)	IPRD (7 to 4)	High	High
	TGI1B	97	H'00000184 to H'00000187	0 to 15 (0)		Low	
	TCI1V	100	H'00000190 to H'00000193	0 to 15 (0)	IPRD (3 to 0)	High	
	TCI1U	101	H'00000194 to H'00000197	0 to 15 (0)		Low	
MTU2	TGI2A	104	H'000001A0 to H'000001A3	0 to 15 (0)	IPRE (15 to 12)	High	
	TGI2B	105	H'000001A4 to H'000001A7	0 to 15 (0)		Low	
	TCI2V	108	H'000001B0 to H'000001B3	0 to 15 (0)	IPRE (11 to 8)	High	
	TCI2U	109	H'000001B4 to H'000001B7	0 to 15 (0)		Low	
SCI0	ERI0	128	H'00000200 to H'00000203	0 to 15 (0)	IPRF (7 to 4)	High	
	RXI0	129	H'00000204 to H'00000207	0 to 15 (0)			
	TXI0	130	H'00000208 to H'0000020B	0 to 15 (0)			
	TEI0	131	H'0000020C to H'0000020F	0 to 15 (0)		Low	
SCI1	ERI1	132	H'00000210 to H'00000213	0 to 15 (0)	IPRF (3 to 0)	High	
	RXI1	133	H'00000214 to H'00000217	0 to 15 (0)			
	TXI1	134	H'00000218 to H'0000021B	0 to 15 (0)			
	TEI1	135	H'0000021C to H'0000021F	0 to 15 (0)		Low	Low

Interrupt Source		Interrupt Vector: Vector No.	Interrupt Vector: Vector Table Address Offset	Interrupt Priority (Initial Value)	Corresponding IPR (Bits)	Priority within IPR Setting Range	Default Priority
A/D*	ADI	136	H'00000220 to H'00000223	0 to 15 (0)	IPRG (15 to 12)	—	High
		138	H'00000228 to H'0000022B				
CMT0	CMI0	144	H'00000240 to H'00000243	0 to 15 (0)	IPRG (7 to 4)	—	
CMT1	CMI1	148	H'00000250 to H'00000253	0 to 15 (0)	IPRG (3 to 0)	—	
WDT	ITI	152	H'00000260 to H'00000263	0 to 15 (0)	IPRH (15 to 12)	High	
BSC	CMI	153	H'00000264 to H'00000267	0 to 15 (0)		Low	Low

Note: * Vector No. 136 = SH7014 only
138 = SH7016, SH7017 only

6.3 Description of Registers

6.3.1 Interrupt Priority Registers A to H (IPRA to IPRH)

Interrupt priority registers A to H (IPRA to IPRH) are 16-bit readable/writable registers that set priority levels from 0 to 15 for IRQ interrupts and on-chip peripheral module interrupts. Correspondence between interrupt request sources and each of the IPRA to IPRH bits is shown in table 6.4.

Bit:	15	14	13	12	11	10	9	8
Initial value:	0	0	0	0	0	0	0	0
R/W:	R/W	R/W	R/W	R/W	R/W	R/W	R/W	R/W

Bit:	7	6	5	4	3	2	1	0
Initial value:	0	0	0	0	0	0	0	0
R/W:	R/W	R/W	R/W	R/W	R/W	R/W	R/W	R/W

Table 6.4 Interrupt Request Sources and IPRA to IPRH

	Bits			
Register	**15 to 12**	**11 to 8**	**7 to 4**	**3 to 0**
Interrupt priority register A	IRQ0	IRQ1	IRQ2	IRQ3
Interrupt priority register B	Reserved	Reserved	IRQ6	IRQ7
Interrupt priority register C	DMAC0	DMAC1	Reserved	Reserved
Interrupt priority register D	MTU0	MTU0	MTU1	MTU1
Interrupt priority register E	MTU2	MTU2	Reserved	Reserved
Interrupt priority register F	Reserved	Reserved	SCI0	SCI1
Interrupt priority register G	A/D	Reserved	CMT0	CMT1
Interrupt priority register H	WDT, BSC	Reserved	Reserved	Reserved

As indicated in table 6.4, four $\overline{\text{IRQ}}$ pins or groups of 4 on-chip peripheral modules are allocated to each register. Each of the corresponding interrupt priority ranks are established by setting a value from H'0 (0000) to H'F (1111) in each of the four-bit groups 15 to 12, 11 to 8, 7 to 4 and 3 to 0. Interrupt priority rank becomes level 0 (lowest) by setting H'0, and level 15 (highest) by setting H'F. If multiple on-chip peripheral modules are assigned to WDT and BSC, those multiple modules are set to the same priority rank.

IPRA to IPRH are initialized to H'0000 by a power-on reset. They are not initialized in standby mode.

6.3.2 Interrupt Control Register (ICR)

The ICR is a 16-bit register that sets the input signal detection mode of the external interrupt input pin NMI and $\overline{\text{IRQ0}}$ to $\overline{\text{IRQ3}}$, $\overline{\text{IRQ6}}$, $\overline{\text{IRQ7}}$ and indicates the input signal level to the NMI pin. It is initialized by power-on reset, but is not initialized by standby mode.

Bit:	15	14	13	12	11	10	9	8
	NMIL	—	—	—	—	—	—	NMIE
Initial value:	*	0	0	0	0	0	0	0
R/W:	R	R	R	R	R	R	R	R/W

Bit:	7	6	5	4	3	2	1	0
	IRQ0S	IRQ1S	IRQ2S	IRQ3S	—	—	IRQ6S	IRQ7S
Initial value:	0	0	0	0	0	0	0	0
R/W:	R/W	R/W	R/W	R/W	R	R	R/W	R/W

Note: * When NMI input is high: 1; when NMI input is low: 0

Bit 15—NMI Input Level (NMIL): Sets the level of the signal input at the NMI pin. This bit can be read to determine the NMI pin level. This bit cannot be modified.

Bit 15 NMIL	Description
0	NMI input level is low
1	NMI input level is high

Bits 14 to 9, 3, 2—Reserved: These bits always read as 0. The write value should always be 0.

Bit 8—NMI Edge Select (NMIE)

Bit 8 NMIE	Description	
0	Interrupt request is detected on falling edge of NMI input	(initial value)
1	Interrupt request is detected on rising edge of NMI input	

Bits 7 to 4, 1, 0—IRQ0 to IRQ3, IRQ6, IRQ7 Sense Select (IRQ0S to IRQ3S, IRQ6S, IRQ7S): These bits set the IRQ0 to IRQ3, IRQ6, IRQ7 interrupt request detection mode.

Bits 7 to 4, 1, 0 IRQ0S to IRQ3S, IRQ6S, IRQ7S	Description	
0	Interrupt request is detected on low level of IRQ input	(initial value)
1	Interrupt request is detected on falling edge of IRQ input	

6.3.3 IRQ Status Register (ISR)

The ISR is a 16-bit register that indicates the interrupt request status of the external interrupt input pins $\overline{\text{IRQ0}}$ to $\overline{\text{IRQ3}}$, $\overline{\text{IRQ6}}$, $\overline{\text{IRQ7}}$. When IRQ interrupts are set to edge detection, held interrupt requests can be withdrawn by writing a 0 to IRQnF after reading an IRQnF = 1.

A power-on reset initializes ISR but the standby mode does not.

Bit:	15	14	13	12	11	10	9	8
	—	—	—	—	—	—	—	—
Initial value:	0	0	0	0	0	0	0	0
R/W:	R	R	R	R	R	R	R	R

Bit:	7	6	5	4	3	2	1	0
	IRQ0F	IRQ1F	IRQ2F	IRQ3F	—	—	IRQ6F	IRQ7F
Initial value:	0	0	0	0	0	0	0	0
R/W:	R/W	R/W	R/W	R/W	R	R	R/W	R/W

Bits 15 to 8, 3, 2—Reserved: These bits always read as 0. The write value should always be 0.

Bits 7 to 4, 1, 0—IRQ0 to IRQ3, IRQ6, IRQ7 Flags (IRQ0F to IRQ3F, IRQ6F, IRQ7F):
These bits display the IRQ0 to IRQ3, IRQ6, IRQ7 interrupt request status.

Bits 7 to 4, 1, 0 IRQ0F to IRQ3F, IRQ6F, IRQ7F	Detection Setting	Description
0	Level detection	No IRQn interrupt request exists. Clear conditions: When $\overline{\text{IRQn}}$ input is high level
	Edge detection	No IRQn interrupt request was detected. (initial value) Clear conditions: 1. When a 0 is written after reading IRQnF = 1 status 2. When IRQn interrupt exception processing has been executed
1	Level detection	An IRQn interrupt request exists. Set conditions: When $\overline{\text{IRQn}}$ input is low level
	Edge detection	An IRQn interrupt request was detected. Set conditions: When a falling edge occurs at an $\overline{\text{IRQn}}$ input

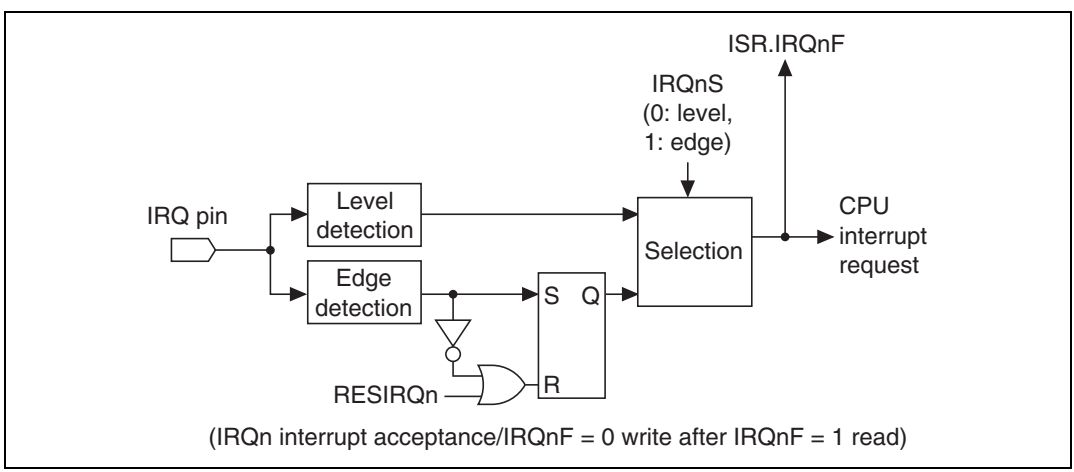

Figure 6.2 External Interrupt Process

6.4 Interrupt Operation

6.4.1 Interrupt Sequence

The sequence of interrupt operations is explained below. Figure 6.3 is a flowchart of the operations.

1. The interrupt request sources send interrupt request signals to the interrupt controller.
2. The interrupt controller selects the highest priority interrupt in the interrupt requests sent, following the priority levels set in interrupt priority level setting registers A to H (IPRA to IPRH). Lower-priority interrupts are ignored. They are held pending until interrupt requests designated as edge-detect type are accepted. For IRQ interrupts, however, withdrawal is possible by accessing the IRQ status register (ISR). See section 6.2.2, IRQ Interrupts, for details. Interrupts held pending due to edge detection are cleared by a power-on reset. If two of these interrupts have the same priority level or if multiple interrupts occur within a single module, the interrupt with the highest default priority or the highest priority within its IPR setting range (as indicated in table 6.3) is selected.
3. The interrupt controller compares the priority level of the selected interrupt request with the interrupt mask bits (I3 to I0) in the CPU's status register (SR). If the request priority level is equal to or less than the level set in I3 to I0, the request is ignored. If the request priority level is higher than the level in bits I3 to I0, the interrupt controller accepts the interrupt and sends an interrupt request signal to the CPU.
4. The CPU detects the interrupt request sent from the interrupt controller when it decodes the next instruction to be executed. Instead of executing the decoded instruction, the CPU starts interrupt exception processing (figure 6.4).
5. SR and PC are saved onto the stack.
6. The priority level of the accepted interrupt is copied to the interrupt mask level bits (I3 to I0) in the status register (SR).
7. The CPU reads the start address of the exception service routine from the exception vector table for the accepted interrupt, jumps to that address, and starts executing the program there. This jump is not a delay branch.

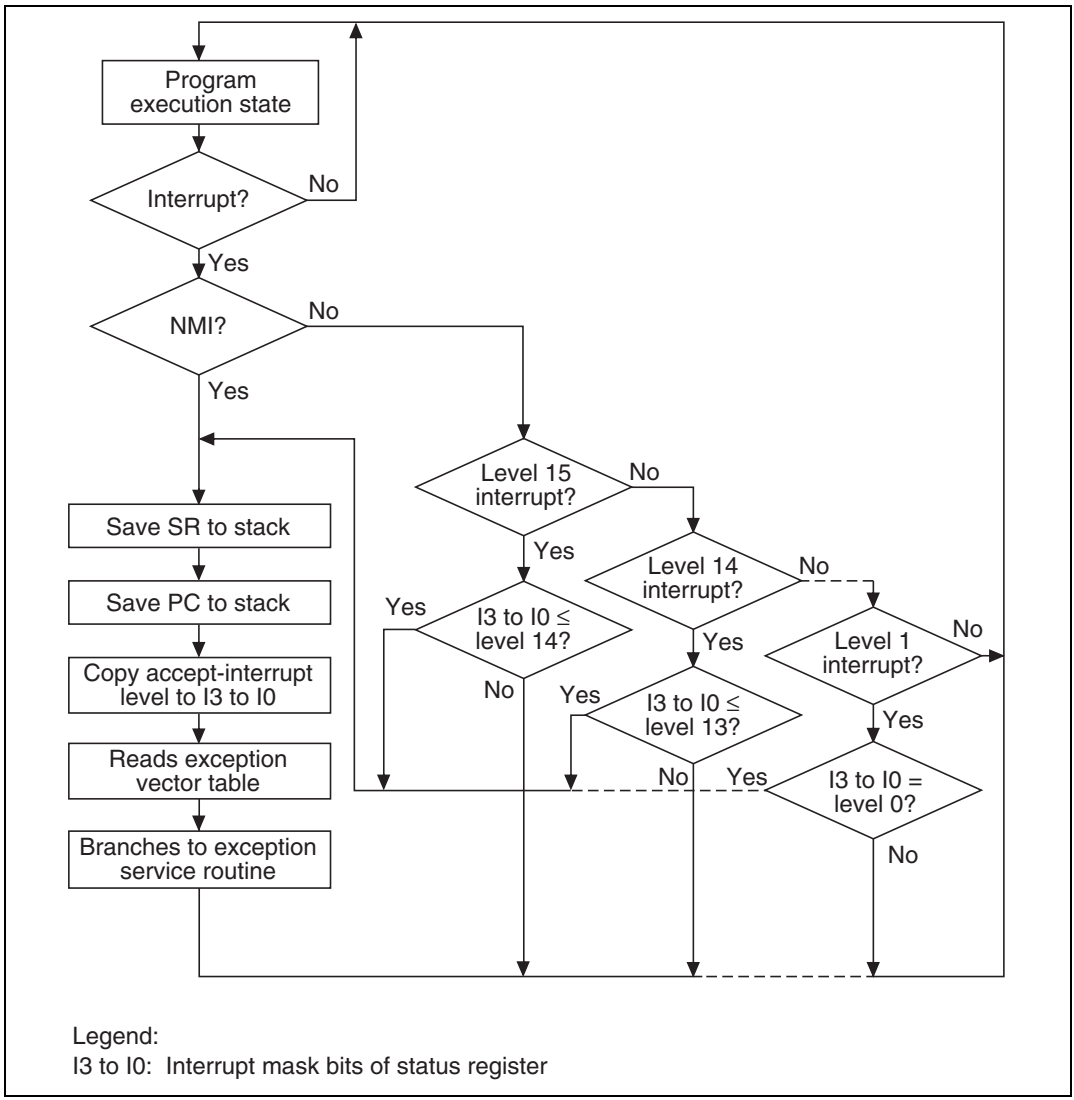

Figure 6.3 Interrupt Sequence Flowchart

6.4.2 Stack after Interrupt Exception Processing

Figure 6.4 shows the stack after interrupt exception processing.

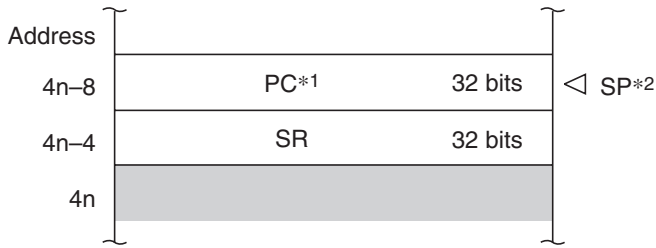

Notes: 1. PC: Start address of the next instruction (return destination instruction) after the executing instruction
2. Always be certain that SP is a multiple of 4

Figure 6.4 Stack after Interrupt Exception Processing

6.5 Interrupt Response Time

Table 6.5 indicates the interrupt response time, which is the time from the occurrence of an interrupt request until the interrupt exception processing starts and fetching of the first instruction of the interrupt service routine begins. Figure 6.5 shows the pipeline when an IRQ interrupt is accepted.

Table 6.5 Interrupt Response Time

Item		Number of States: NMI, Peripheral Module	Number of States: IRQ	Notes
DMAC active judgment		0 or 1	1	1 state required for interrupt signals for which DMAC activation is possible
Compare identified interrupt priority with SR mask level		2	3	
Wait for completion of sequence currently being executed by CPU		X (≥ 0)		The longest sequence is for interrupt or address-error exception processing (X = 4 + m1 + m2 + m3 + m4). If an interrupt-masking instruction follows, however, the time may be even longer.
Time from start of interrupt exception processing until fetch of first instruction of exception service routine starts		5 + m1 + m2 + m3		Performs the PC and SR saves and vector address fetch.
Interrupt response time	Total:	7 + m1 + m2 + m3	9 + m1 + m2 + m3	
	Minimum:	10	12	0.35 to 0.42 μs at 28.7 MHz
	Maximum:	12 + 2 (m1 + m2 + m3) + m4	13 + 2 (m1 + m2 + m3) + m4	0.67 to 0.70 μs at 28.7 MHz*

Note: When m1 = m2 = m3 = m4 = 1

m1 to m4 are the number of states needed for the following memory accesses.

m1: SR save (longword write)

m2: PC save (longword write)

m3: Vector address read (longword read)

m4: Fetch first instruction of interrupt service routine

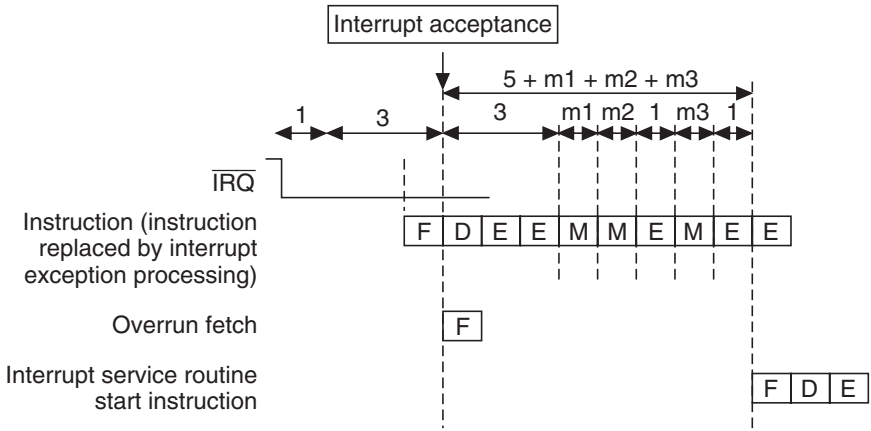

Legend:
F: Instruction fetch (instruction fetched from memory where program is stored).
D: Instruction decoding (fetched instruction is decoded).
E: Instruction execution (data operation and address calculation is performed according to the results of decoding).
M: Memory access (data in memory is accessed).

Figure 6.5 Pipeline when an IRQ Interrupt is Accepted

6.6 Data Transfer with Interrupt Request Signals

The following data transfers can be done using interrupt request signals:

- Activate DMAC only, without generating CPU interrupt

Among interrupt sources, those designated as DMAC activating sources are masked and not input to the INTC. The masking condition is listed below:

Mask condition = DME × (DE0 × source selection 0 + DE1)

Figure 6.6 shows a control block diagram.

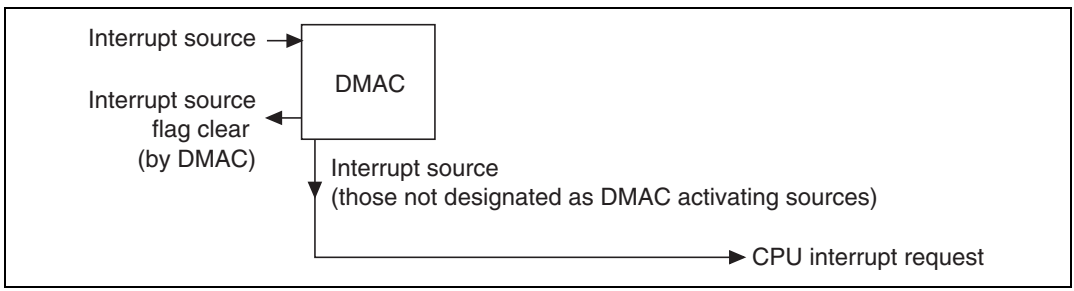

Figure 6.6 Interrupt Control Block Diagram

6.6.1 Handling DMAC Activating Sources but Not CPU Interrupt Sources

1. Select the DMAC as a source and set the DME bit to 1. CPU interrupt sources and DTC activating sources are masked regardless of the interrupt priority level register settings or DTC register settings.
2. Activating sources are applied to the DMAC when interrupts occur.
3. The DMAC clears activating sources at the time of data transfer.

6.6.2 Treating CPU Interrupt Sources but Not DMAC Activating Sources

1. Either do not select the DMAC as a source, or clear the DME bit to 0.
2. When interrupts occur, interrupt requests are sent to the CPU.
3. The CPU clears the interrupt source and performs the necessary processing in the interrupt processing routine.

Section 7 Cache Memory (CAC)

7.1 Overview

The LSI has an on-chip cache memory (CAC: CAChe) with 1 kbyte of cache data and a 256-entry cache tag. The cache data and cache tag space can be used as on-chip RAM space when the cache is not being used.

7.1.1 Features

The CAC has the following features. The cache tag and cache data configuration is shown in figure 7.1.

- 1-kbyte capacity
- External memory (CS space and DRAM space) instruction code and PC relative data caching
- 256 entry cache tag (tag address 15 bits)
- 4-byte line length
- Direct map replacement algorithm
- Valid flag (1 bit) included for purges

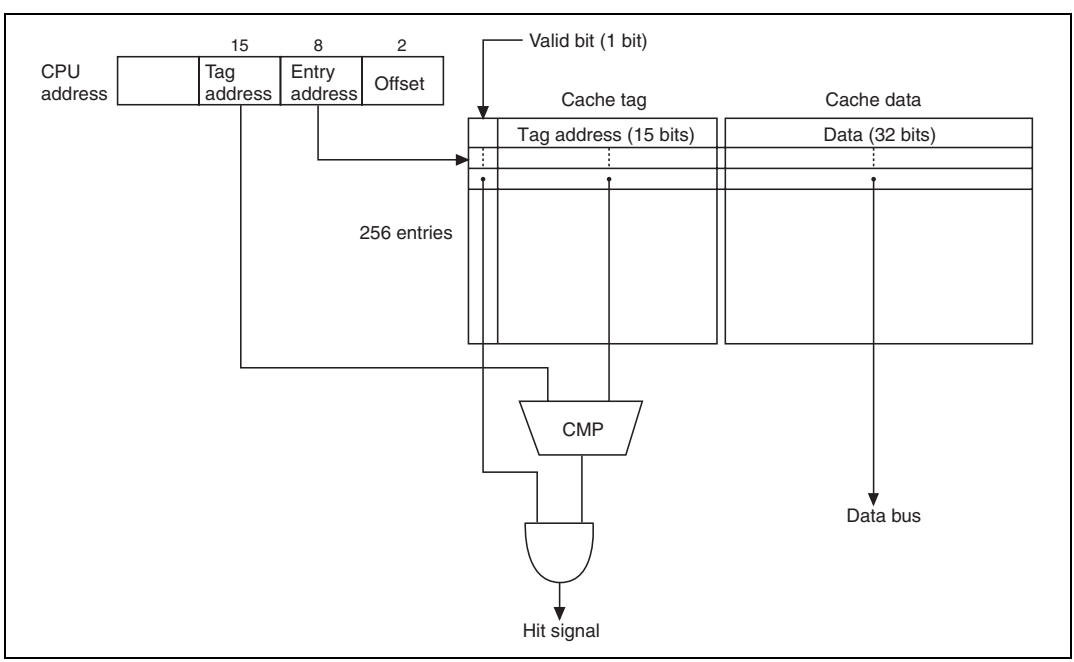

Figure 7.1 Cache Tag and Cache Data Configuration

7.1.2 Block Diagram

Figure 7.2 shows a block diagram of the cache.

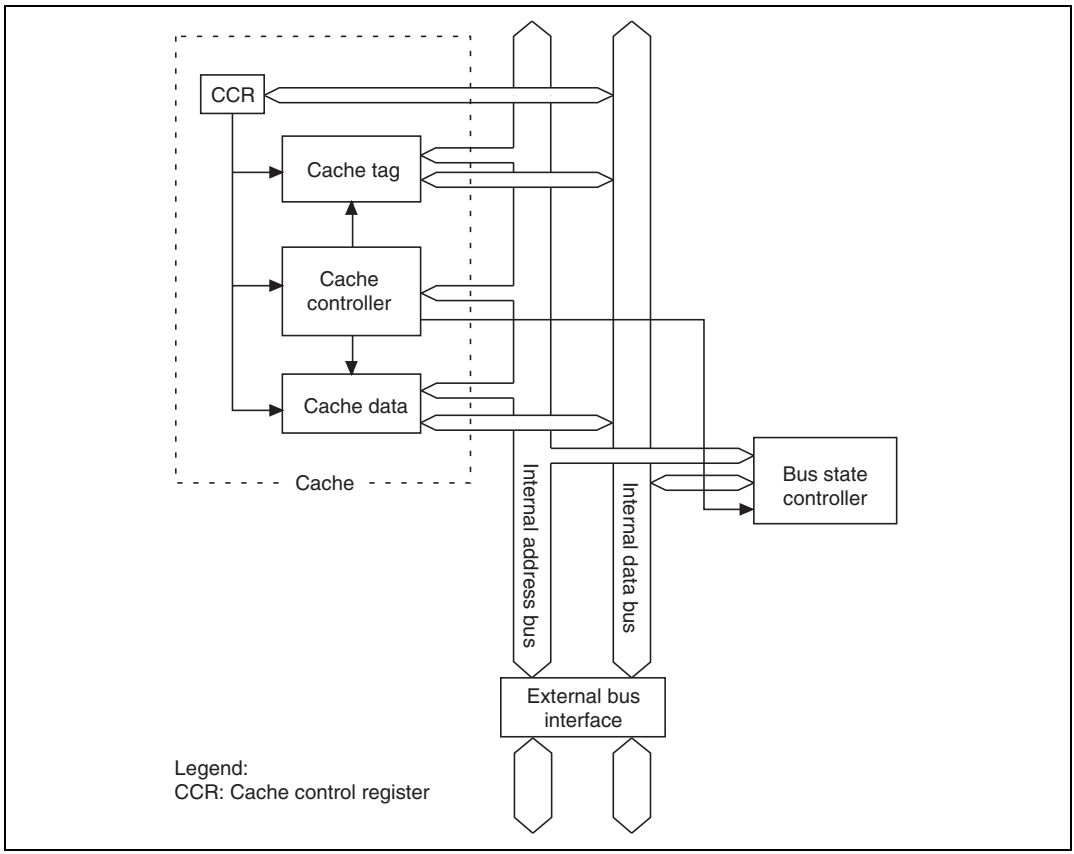

Figure 7.2 Cache Block Diagram

7.1.3 Register Configuration

The cache has one register, which can be used to control the enabling or disabling of each cache space. The register configuration is shown in table 7.1.

Table 7.1 Register Configuration

Name	Abbreviation	R/W	Initial Value	Address	Access Size (Bits)
Cache control register	CCR	R/W	H'0000*	H'FFFF8740	8, 16, 32

Note: * Bits 15 to 5 are undefined.

7.2 Register Explanation

7.2.1 Cache Control Register (CCR)

The cache control register (CCR) selects the cache enable/disable of each space.

The CCR is a 16-bit readable/writable register. It is initialized to H'0000 by power on resets, but is not initialized by standby mode.

Bit:	15	14	13	12	11	10	9	8
	—	—	—	—	—	—	—	—
Initial value:	*	*	*	*	*	*	*	*
R/W:	R	R	R	R	R	R	R	R

Bit:	7	6	5	4	3	2	1	0
	—	—	—	CE DRAM	CE CS3	CE CS2	CE CS1	CE CS0
Initial value:	*	*	*	0	0	0	0	0
R/W:	R	R	R	R/W	R/W	R/W	R/W	R/W

Note: * Bits 15 to 5 are undefined.

Bits 15 to 5—Reserved: Reading these bits gives undefined values. The write value should always be 0.

Bit 4—DRAM Space Cache Enable (CEDRAM): Selects whether to use DRAM space as a cache object (enable) or to exclude it (disable). A 0 disables, and a 1 enables such use.

Bit 4 CEDRAM	Description	
0	DRAM space cache disabled	(initial value)
1	DRAM space cache enabled	

Bit 3—CS3 Space Cache Enable (CECS3): Selects whether to use CS3 space as a cache object (enable) or to exclude it (disable). A 0 disables, and a 1 enables such use.

Bit 3 CECS3	Description	
0	CS3 space cache disabled	(initial value)
1	CS3 space cache enabled	

Bit 2—CS2 Space Cache Enable (CECS2): Selects whether to use CS2 space as a cache object (enable) or to exclude it (disable). A 0 disables, and a 1 enables such use.

Bit 2 CECS2	Description	
0	CS2 space cache disabled	(initial value)
1	CS2 space cache enabled	

Bit 1—CS1 Space Cache Enable (CECS1): Selects whether to use CS1 space as a cache object (enable) or to exclude it (disable). A 0 disables, and a 1 enables such use.

Bit 1 CECS1	Description	
0	CS1 space cache disabled	(initial value)
1	CS1 space cache enabled	

Bit 0—CS0 Space Cache Enable (CECS0): Selects whether to use CS0 space as a cache object (enable) or to exclude it (disable). A 0 disables, and a 1 enables such use.

Bit 0 CECS0	Description	
0	CS0 space cache disabled	(initial value)
1	CS0 space cache enabled	

7.3 Address Array and Data Array

There is a special cache space for controlling the cache. This space is divided into an address array and a data array, where addresses (tag address, including valid bit) and data (4-byte line length) for cache control are recorded. The special cache space is shown in table 7.2. It can be used as on-chip RAM space when the cache is not being used.

Table 7.2 Special Cache Space

Space Classification	Address	Size	Bus Width
Address array	H'FFFFF000 to H'FFFFF3FF	1 kbyte	32 bits
Data array	H'FFFFF400 to H'FFFFF7FF	1 kbyte	32 bits

7.3.1 Cache Address Array Read/Write Space

The cache address array has a compulsory read/write (figure 7.3).

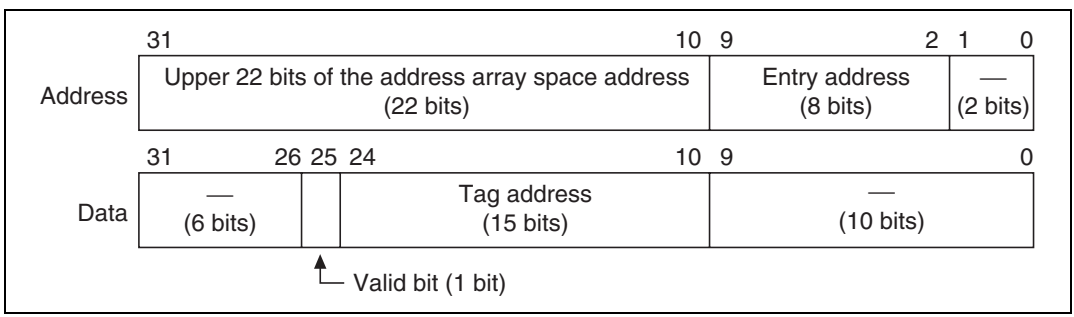

Figure 7.3 Cache Address Array

Address Array Read: Designates entry address and reads out the corresponding tag address value/valid bit value.

Address Array Write: Designates entry address and writes the designated tag address value/valid bit value.

7.3.2 Cache Data Array Read/Write Space

The cache data array has a compulsory read/write (figure 7.4).

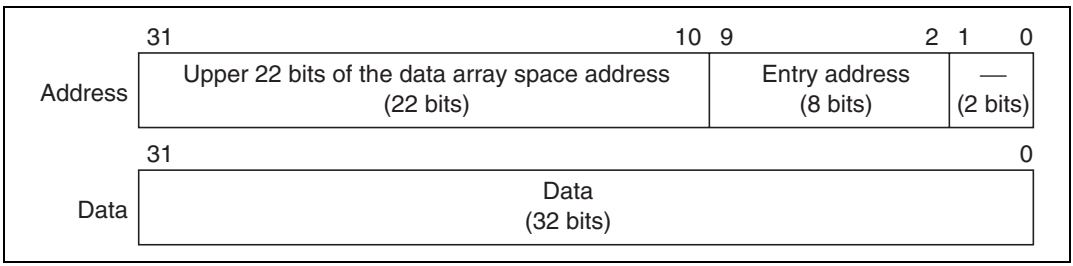

Figure 7.4 Cache Data Array

Data Array Read: Designates entry address and reads out the corresponding line of data.

Data Array Write: Designates entry address and writes designated data to the corresponding line.

7.4 Usage Notes

7.4.1 Cache Initialization

Always initialize the cache before enabling it. Specifically, use an address array write to write 0 to all valid bits for all entries (256 times), that is,those in the address range H'FFFFF000 to H'FFFFF3FFF.

7.4.2 Forced Access to Address Array and Data Array

While the cache is enabled, it is not possible to write to the address array or data array via the CPU, or DMAC, and a read will return an undefined value. The cache must be disabled before making a forced access to the address array or data array.

7.4.3 Cache Miss Penalty and Cache Fill Timing

When a cache miss occurs, a single idle cycle is generated as a penalty immediately before the cache fill (access from external memory in the event of a cache miss), as shown in figure 7.5. However, in the case of consecutive cache misses, idle cycles are not generated for the second and subsequent cache misses, as shown in figure 7.6.

As the timing for a cache fill from normal space, the CS assert period immediately before the end of the bus cycle (or the last bus cycle when two or four bus cycles are generated, such as in a word access to 8-bit space) is extended by an additional cycle, as shown in figures 7.5 and 7.6.

Similarly, as the timing for a cache fill from DRAM space, the RAS assert period immediately before the end of the bus cycle is extended by an additional cycle as shown in figure 7.7. In RAS down mode, the next bus cycle is delayed by one cycle as shown in figure 7.8.

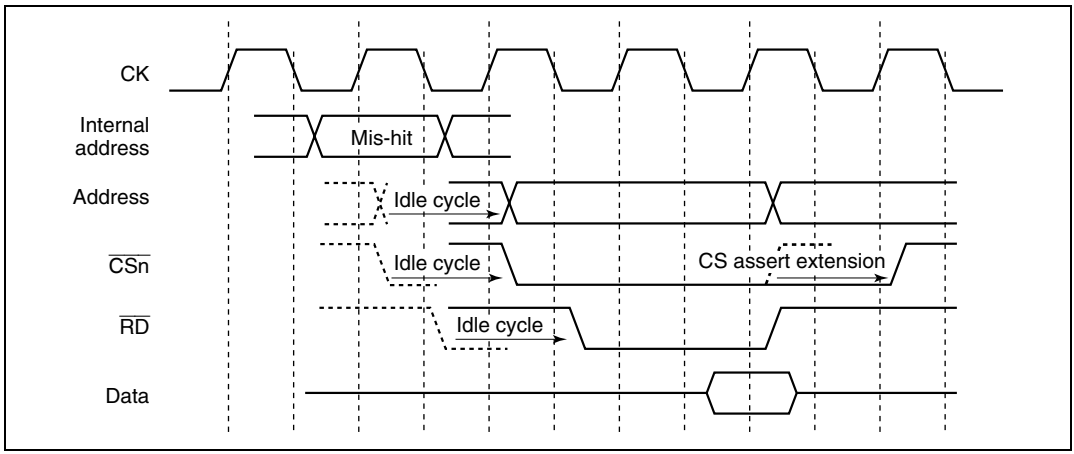

Figure 7.5 Cache Fill Timing in Case of Non-Consecutive Cache Miss from Normal Space (No Wait, No CS Assert Extension)

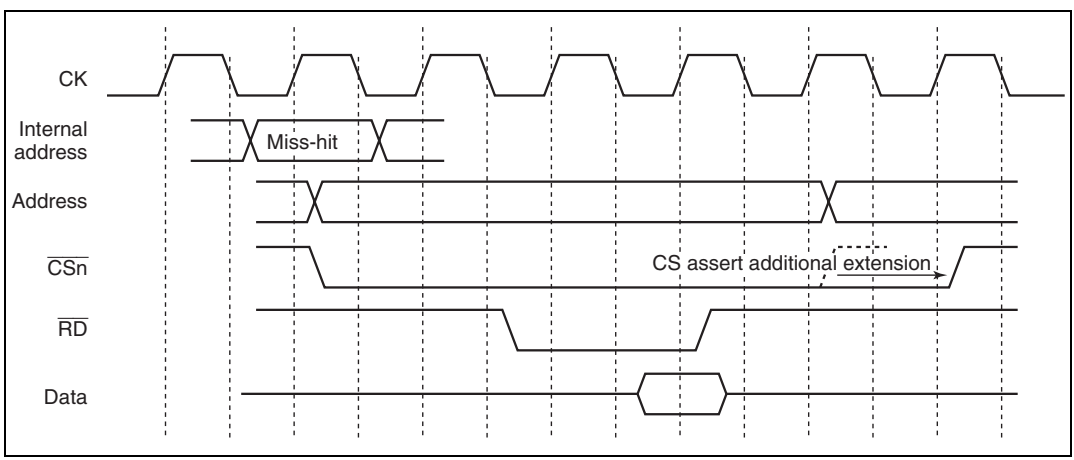

Figure 7.6 Cache Fill Timing in Case of Consecutive Cache Misses from Normal Space (No Wait, CS Assert Extension)

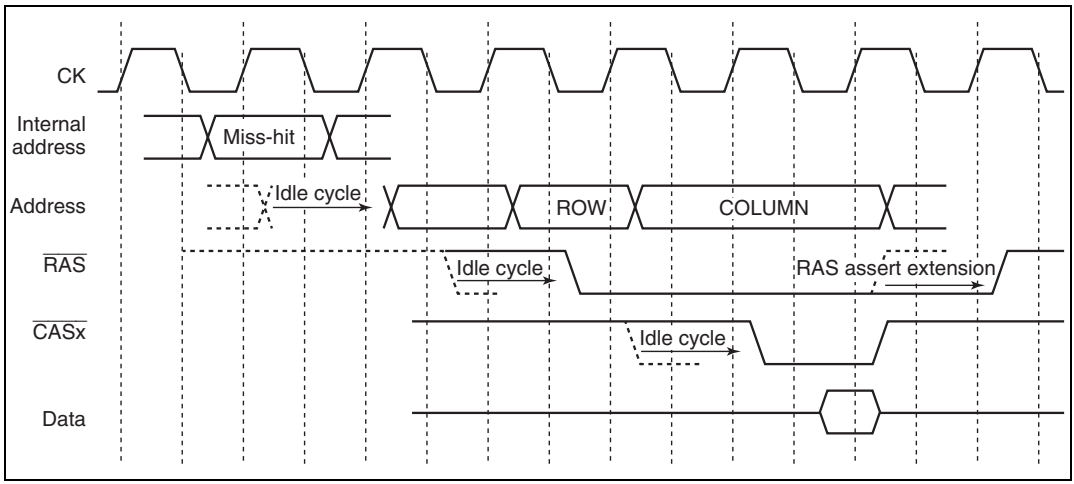

Figure 7.7 Cache Fill Timing in Case of Non-Consecutive Cache Miss from DRAM Space (Normal Mode, TPC = 0, RCD = 0, No Wait)

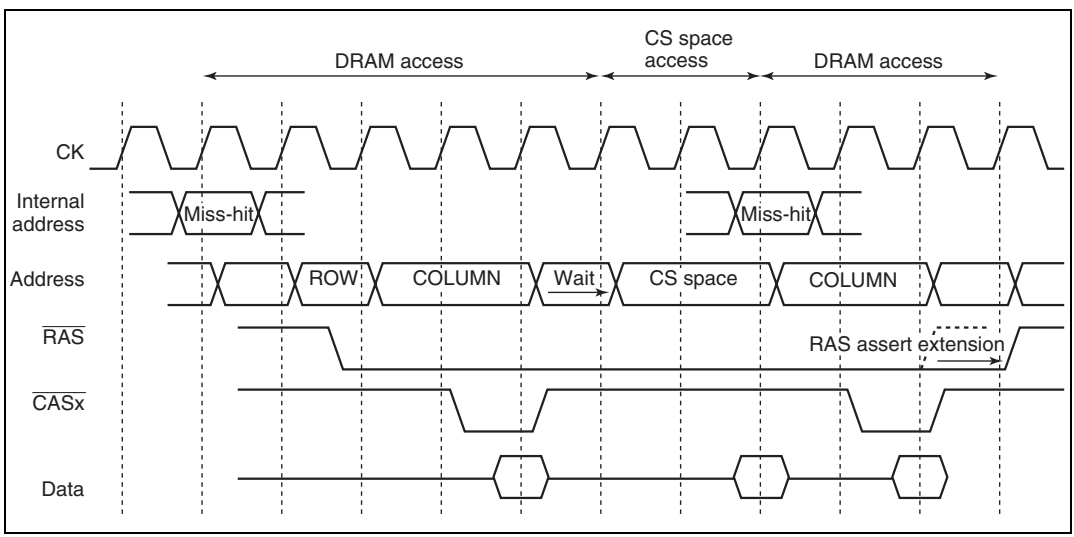

Figure 7.8 Cache Fill Timing in Case of Consecutive Cache Misses from DRAM Space (RAS Down Mode, TPC = 0, RCD = 0, No Wait)

7.4.4 Cache Hit after Cache Miss

The first cache hit after a cache miss is regarded as a cache miss, and a cache fill without idle cycle generation is performed. The next hit operates as a cache hit.

Section 8 Bus State Controller (BSC)

8.1 Overview

The bus state controller (BSC) divides up the address spaces and outputs control for various types of memory. This enables memories like DRAM, SRAM, and ROM to be linked directly to the LSI without external circuitry.

8.1.1 Features

The BSC has the following features:

- Address space is divided into five spaces
  - A maximum linear 2 Mbytes for CS0 address space in modes with on-chip ROM enabled, and a maximum linear 4 Mbytes in modes with on-chip ROM disabled
  - A maximum linear 4 Mbytes for each of address spaces CS1, CS2, and CS3
  - A maximum linear 16 Mbytes for DRAM dedicated space
  - Bus width can be selected for each space (8 or 16 bits)
  - Wait states can be inserted by software for each space
  - Wait states can be inserted via the $\overline{\text{WAIT}}$ pin in external memory space accesses
  - Outputs control signals for each space according to the type of memory connected
- On-chip ROM/RAM interfaces
  - On-chip RAM access of 32 bits in 1 state
  - On-chip ROM access of 32 bits in 1 state
- Direct interface to DRAM
  - Multiplexes row/column addresses according to DRAM capacity
  - Supports high-speed page mode and RAS down mode
- Access control for each type of memory, peripheral LSI
  - Address/data multiplex function
- Refresh
  - Supports CAS-before-RAS refresh (auto-refresh) and self-refresh
- Refresh counter can be used as an interval timer
  - Interrupt request generated upon compare match (CMI interrupt request signal)

8.1.2 Block Diagram

Figure 8.1 shows the BSC block diagram.

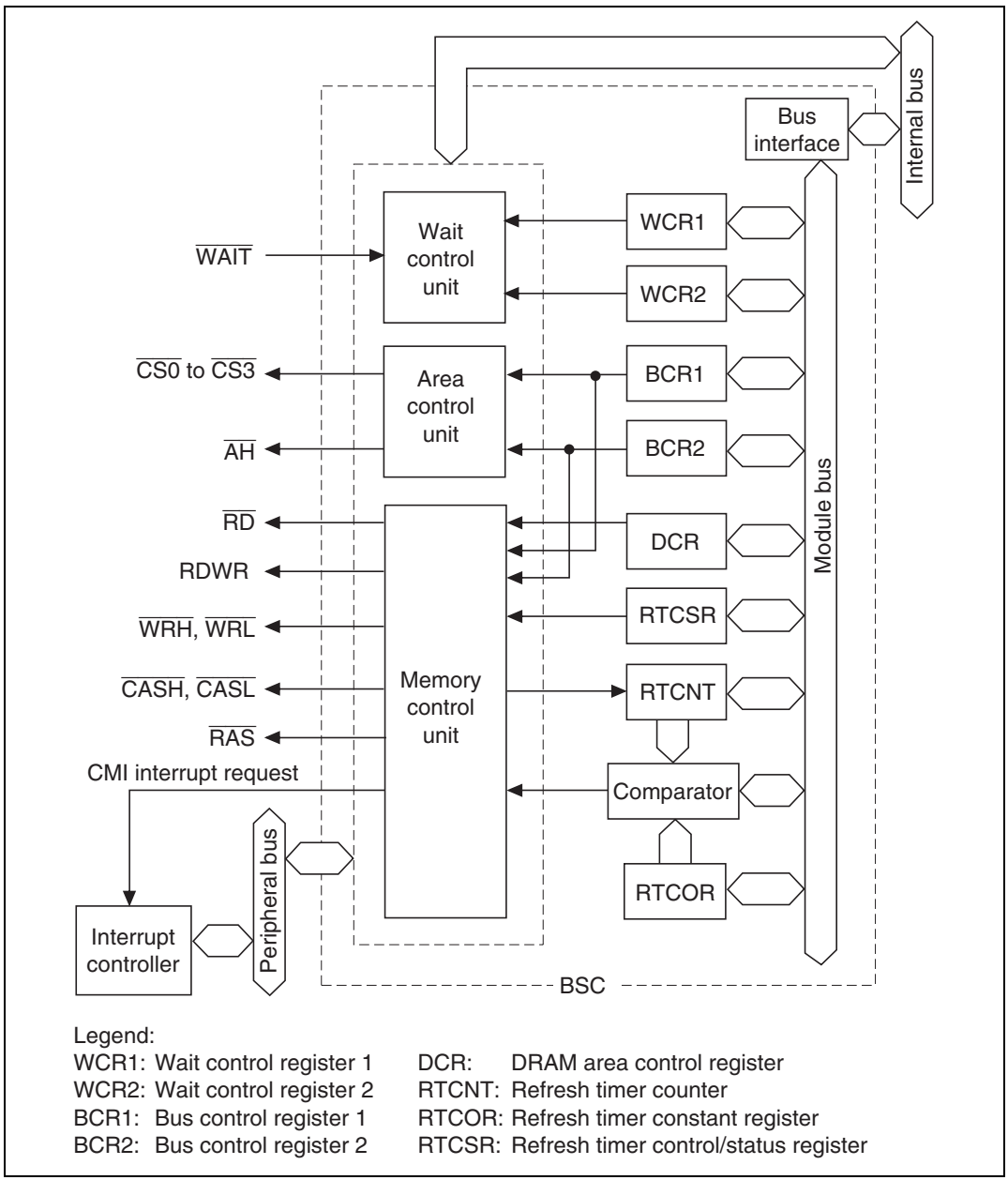

Figure 8.1 BSC Block Diagram

8.1.3 Pin Configuration

Table 8.1 shows the bus state controller pin configuration.

Table 8.1 Pin Configuration

Signal	I/O	Description
A21 to A0	O	Address output (A21 to A18 become input ports in power-on reset)
D15 to D0	I/O	16-bit data bus. D15-D0 are address output and data I/O during address/data multiplex I/O.
$\overline{CS0}$ to $\overline{CS3}$	O	Chip select
$\overline{RD}$	O	Strobe that indicates the read cycle for ordinary space/multiplex I/O. Also output during DRAM access.
$\overline{WRH}$	O	Strobe that indicates a write cycle to the higher byte (D15 to D8) for ordinary space/multiplex I/O. Also output during DRAM access.
$\overline{WRL}$	O	Strobe that indicates a write cycle to the lower byte (D7 to D0) for ordinary space/multiplex I/O. Also output during DRAM access.
RDWR	O	Strobe indicating a write cycle to DRAM (used for DRAM space)
$\overline{RAS}$	O	RAS signal for DRAM (used for DRAM space)
$\overline{CASH}$	O	CAS signal when accessing the higher byte (D15 to D8) of DRAM (used for DRAM space)
$\overline{CASL}$	O	CAS signal when accessing the lower byte (D7 to D0) of DRAM (used for DRAM space)
$\overline{AH}$	O	Signal to hold the address during address/data multiplex
$\overline{WAIT}$	I	Wait state request signal

8.1.4 Register Configuration

The BSC has eight registers. These registers are used to control wait states, bus width, and interfaces with memories like DRAM, SRAM, and ROM, as well as refresh control. The register configurations are listed in table 8.2.

All registers are 16 bits. Do not access DRAM space before completing the memory interface settings. All BSC registers are all initialized by a power-on reset. Values are maintained in standby mode.

Table 8.2 Register Configuration

Name	Abbr.	R/W	Initial Value	Address	Access Size
Bus control register 1	BCR1	R/W	H'200F	H'FFFF8620	8, 16, 32
Bus control register 2	BCR2	R/W	H'FFFF	H'FFFF8622	8, 16, 32
Wait state control register 1	WCR1	R/W	H'FFFF	H'FFFF8624	8, 16, 32
Wait state control register 2	WCR2	R/W	H'000F	H'FFFF8626	8, 16, 32
DRAM area control register	DCR	R/W	H'0000	H'FFFF862A	8, 16, 32
Refresh timer control/status register	RTCSR	R/W	H'0000	H'FFFF862C	8, 16, 32
Refresh timer counter	RTCNT	R/W	H'0000	H'FFFF862E	8, 16, 32
Refresh time constant register	RTCOR	R/W	H'0000	H'FFFF8630	8, 16, 32

8.1.5 Address Map

Figure 8.2 shows the address format used by the SH7014.

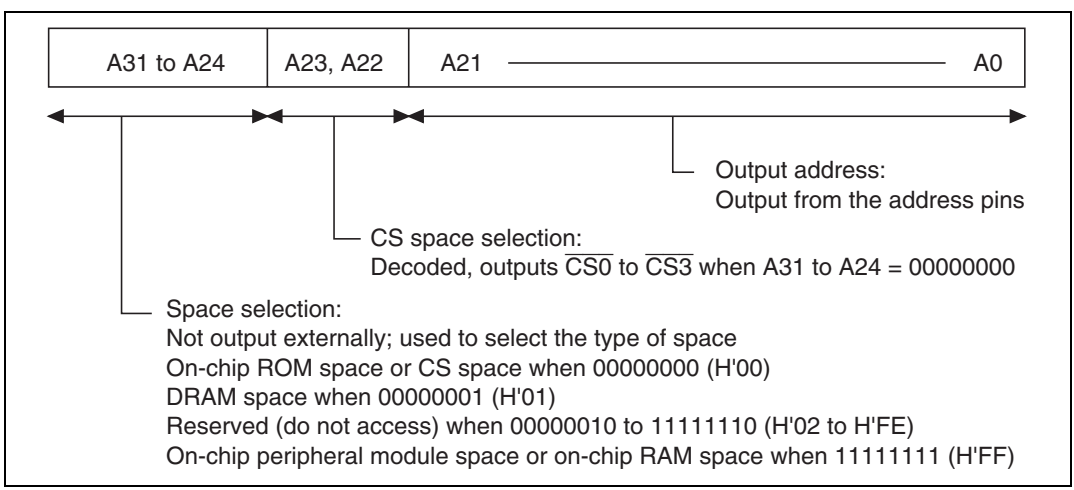

Figure 8.2 Address Format

This LSI uses 32-bit addresses:

- A31 to A24 are used to select the type of space and are not output externally.
- Bits A23 and A22 are decoded and output as chip select signals ($\overline{CS0}$ to $\overline{CS3}$) for the corresponding areas when bits A31 to A24 are 00000000.
- A21 to A0 are output externally.

Table 8.3 shows an address map.

Table 8.3 Address Map

- In on-chip ROM enabled mode*[5]

Address	Space	Memory	Size	Bus Width
H'00000000 to H'0001FFFF*[4]	On-chip ROM	On-chip ROM	128 kbytes	32 bits
H'00020000 to H'001FFFFF	Reserved			
H'00200000 to H'003FFFFF	CS0 space	Ordinary space	2 Mbytes	8/16 bits*[1]
H'00400000 to H'007FFFFF	CS1 space	Ordinary space	4 Mbytes	8/16 bits*[1]
H'00800000 to H'00BFFFFF	CS2 space	Ordinary space	4 Mbytes	8/16 bits*[1]
H'00C00000 to H'00FFFFFF	CS3 space	Ordinary space or multiplex I/O space	4 Mbytes	8/16 bits*[2]
H'01000000 to H'01FFFFFF	DRAM space	DRAM	16 Mbytes	8/16 bits*[1]
H'02000000 to H'FFFF7FFF	Reserved			
H'FFFF8000 to H'FFFF87FF	On-chip peripheral module	On-chip peripheral module	2 kbytes	8/16 bits
H'FFFF8800 to H'FFFFEFFF	Reserved			
H'FFFFF000 to H'FFFFFFFF*[6]	On-chip RAM	On-chip RAM	4 kbytes	32 bits

- In on-chip ROM disabled mode

Address	Space	Memory	Size	Bus Width
H'00000000 to H'003FFFFF	CS0 space	Ordinary space	4 Mbytes	8/16 bits*3
H'00400000 to H'007FFFFF	CS1 space	Ordinary space	4 Mbytes	8/16 bits*1
H'00800000 to H'00BFFFFF	CS2 space	Ordinary space	4 Mbytes	8/16 bits*1
H'00C00000 to H'00FFFFFF	CS3 space	Ordinary space or multiplex I/O space	4 Mbytes	8/16 bits*2
H'01000000 to H'01FFFFFF	DRAM space	DRAM	16 Mbytes	8/16 bits*1
H'02000000 to H'FFFF7FFF	Reserved			
H'FFFF8000 to H'FFFF87FF	On-chip peripheral module	On-chip peripheral module	2 kbytes	8/16 bits
H'FFFF8800 to H'FFFFEFFF	Reserved			
H'FFFFF000 to H'FFFFFFFF*6	On-chip RAM	On-chip RAM	4 kbytes	32 bits

Notes: Do not access reserved space, as operation cannot be guaranteed in this case.

In single-chip mode, space other than on-chip ROM, on-chip RAM, and on-chip peripheral module space cannot be used.

1. Selected by on-chip register settings.
2. Ordinary space: selected by on-chip register settings.
   Multiplex I/O space: 8/16 bits selected by the A14 bit.
3. 8/16 bits selected by the mode pin.
4. In the 64-kbyte on-chip ROM version (SH7016), on-chip ROM addresses are H'00000000 to H'0000FFFF, and addresses H'00010000 to H'0001FFFF are reserved space.
5. SH7016/17 only.
6. In the 3-kbyte on-chip RAM versions (SH7014/16), on-chip RAM addresses are H'FFFFF000 to H'FFFFFBFF, and addresses H'FFFFFC00 to H'FFFFFFFF are reserved space.

8.2 Description of Registers

8.2.1 Bus Control Register 1 (BCR1)

BCR1 is a 16-bit read/write register that selects multiplex I/O, and specifies the bus size of the CS spaces.

Write bits 8 to 0 of BCR1 during the initialization stage after a power-on reset, and do not change the values thereafter. In on-chip ROM ineffective mode, do not access any CS space other than CS0 until after completion of register initialization.

BCR1 is initialized by power-on resets to H'200F, but is not initialized by software standbys.

Bit:	15	14	13	12	11	10	9	8
	—	—	—	—	—	—	—	IOE
Initial value:	0	0	1	0	0	0	0	0
R/W:	R	R	R	R	R	R	R	R/W

Bit:	7	6	5	4	3	2	1	0
	—	—	—	—	A3SZ	A2SZ	A1SZ	A0SZ
Initial value:	0	0	0	0	1	1	1	1
R/W:	R	R	R	R	R/W	R/W	R/W	R/W

Note: Do not write 1 to bits 4 to 7, as operation is not guaranteed in this case.

Bits 15, 14, 12 to 9—Reserved: These bits always read as 0. The write value should always be 0.

Bit 13—Reserved: This bit always read as 1. The write value should always be 1.

Bit 8—Multiplex I/O Enable (IOE): Selects the use of CS3 space as ordinary space or address/data multiplex I/O space. A 0 selects ordinary space and a 1 selects address/data multiplex I/O space. When address/data multiplex I/O space is selected, the address and data are multiplexed and output from the data bus. When CS3 space is an address/data multiplex I/O space, bus size is decided by the A14 bit (A14 = 0: 8 bit, A14 = 1: 16 bit).

Bit 8 IOE	Description	
0	CS3 space is ordinary space	(initial value)
1	CS3 space is address/data multiplex I/O space	

Bits 7 to 4—Reserved: These bits read 0 after a reset. The write value should always be 0. Operation is not guaranteed if the write value is 1.

Bit 3—CS3 Space Size Specification (A3SZ): Specifies the CS3 space bus size. This is effective only when CS3 space is ordinary space. When CS3 space is an address/data multiplex I/O space, bus size is decided by the A14 bit.

Bit 3 A3SZ	Description	
0	Byte (8-bit) size	(initial value)
1	Word (16-bit) size	

Bit 2—CS2 Space Size Specification (A2SZ): Specifies the CS2 space bus size.

Bit 2 A2SZ	Description	
0	Byte (8-bit) size	
1	Word (16-bit) size	(initial value)

Bit 1—CS1 Space Size Specification (A1SZ): Specifies the CS1 space bus size.

Bit 1 A1SZ	Description	
0	Byte (8-bit) size	
1	Word (16-bit) size	(initial value)

Bit 0—CS0 Space Size Specification (A0SZ): Specifies the CS0 space bus size.

Bit 0 A0SZ	Description	
0	Byte (8-bit) size	
1	Word (16-bit) size	(initial value)

Note: A0SZ is effective only in on-chip ROM effective mode. In on-chip ROM ineffective mode, the CS0 space bus size is specified by the mode pin.

8.2.2 Bus Control Register 2 (BCR2)

BCR2 is a 16-bit read/write register that specifies the number of idle cycles and $\overline{CS}$ signal assert extension of each CS space.

BCR2 is initialized by power-on resets to H'FFFF, but is not initialized by software standbys.

Bit:	15	14	13	12	11	10	9	8
	IW31	IW30	IW21	IW20	IW11	IW10	IW01	IW00
Initial value:	1	1	1	1	1	1	1	1
R/W:	R/W	R/W	R/W	R/W	R/W	R/W	R/W	R/W

Bit:	7	6	5	4	3	2	1	0
	CW3	CW2	CW1	CW0	SW3	SW2	SW1	SW0
Initial value:	1	1	1	1	1	1	1	1
R/W:	R/W	R/W	R/W	R/W	R/W	R/W	R/W	R/W

Bits 15 to 8—Idles between Cycles (IW31, IW30, IW21, IW20, IW11, IW10, IW01, IW00): These bits specify idle cycles inserted between consecutive accesses when the second one is to a different CS area after a read. Idles are used to prevent data conflict between ROM (and other memories, which are slow to turn the read data buffer off), fast memories, and I/O interfaces. Even when access is to the same area, idle cycles must be inserted when a read access is followed immediately by a write access. The idle cycles to be inserted comply with the area specification of the previous access. Refer to section 8.6, Waits between Access Cycles, for details.

IW31, IW30 specify the idle between cycles for CS3 space; IW21, IW20 specify the idle between cycles for CS2 space; IW11, IW10 specify the idle between cycles for CS1 space and IW01, IW00 specify the idle between cycles for CS0 space.

Bit 15 IW31	Bit 14 IW30	Description
0	0	No idle cycle after accessing CS3 space
	1	Inserts one idle cycle
1	0	Inserts two idle cycles
	1	Inserts three idle cycles (initial value)

Bit 13 IW21	Bit 12 IW20	Description	
0	0	No idle cycle after accessing CS2 space	
	1	Inserts one idle cycle	
1	0	Inserts two idle cycles	
	1	Inserts three idle cycles	(initial value)

Bit 11 IW11	Bit 10 IW10	Description	
0	0	No idle cycle after accessing CS1 space	
	1	Inserts one idle cycle	
1	0	Inserts two idle cycles	
	1	Inserts three idle cycles	(initial value)

Bit 9 IW01	Bit 8 IW00	Description	
0	0	No idle cycle after accessing CS0 space	
	1	Inserts one idle cycle	
1	0	Inserts two idle cycles	
	1	Inserts three idle cycles	(initial value)

Bits 7 to 4—Idle Specification for Continuous Access (CW3, CW2, CW1, CW0): The continuous access idle specification makes insertions to clearly delineate the bus intervals by once negating the $\overline{\text{CS}}$n signal when doing consecutive accesses of the same CS space. When a write immediately follows a read, the number of idle cycles inserted is the larger of the two values specified by IW and CW. Refer to section 8.6, Waits between Access Cycles, for details.

CW3 specifies the continuous access idles for CS3 space; CW2 specifies the continuous access idles for CS2 space; CW1 specifies the continuous access idles for CS1 space and CW0 specifies the continuous access idles for CS0 space.

Bit 7 CW3	Description	
0	No CS3 space continuous access idle cycles	
1	One CS3 space continuous access idle cycle	(initial value)

Bit 6 CW2	Description	
0	No CS2 space continuous access idle cycles	
1	One CS2 space continuous access idle cycle	(initial value)

Bit 5 CW1	Description	
0	No CS1 space continuous access idle cycles	
1	One CS1 space continuous access idle cycle	(initial value)

Bit 4 CW0	Description	
0	No CS0 space continuous access idle cycles	
1	One CS0 space continuous access idle cycle	(initial value)

Bits 3 to 0—$\overline{\text{CS}}$ Assert Extension Specification (SW3, SW2, SW1, SW0): The $\overline{\text{CS}}$ assert cycle extension specification is for making insertions to prevent extension of the $\overline{\text{RD}}$ signal or $\overline{\text{WRx}}$ signal assert period beyond the length of the $\overline{\text{CSn}}$ signal assert period. Extended cycles insert one cycle before and after each bus cycle, which simplifies interfaces with external devices and also has the effect of extending write data hold time. Refer to section 8.3.3, $\overline{\text{CS}}$ Assert Extension Function, for details.

SW3 specifies the $\overline{\text{CS}}$ assert extension for CS3 space access; SW2 specifies the $\overline{\text{CS}}$ assert extension for CS2 space access; SW1 specifies the $\overline{\text{CS}}$ assert extension for CS1 space access and SW0 specifies the $\overline{\text{CS}}$ assert extension for CS0 space access.

Bit 3 SW3	Description	
0	No CS3 space $\overline{\text{CS}}$ assert extension	
1	CS3 space $\overline{\text{CS}}$ assert extension	(initial value)

Bit 2 SW2	Description	
0	No CS2 space $\overline{\text{CS}}$ assert extension	
1	CS2 space $\overline{\text{CS}}$ assert extension	(initial value)

Bit 1 SW1	Description	
0	No CS1 space $\overline{CS}$ assert extension	
1	CS1 space $\overline{CS}$ assert extension	(initial value)

Bit 0 SW0	Description	
0	No CS0 space $\overline{CS}$ assert extension	
1	CS0 space $\overline{CS}$ assert extension	(initial value)

8.2.3 Wait Control Register 1 (WCR1)

WCR1 is a 16-bit read/write register that specifies the number of wait cycles (0 to 15) for each CS space.

WCR1 is initialized by power-on resets to H'FFFF, but is not initialized by software standbys.

Bit:	15	14	13	12	11	10	9	8
	W33	W32	W31	W30	W23	W22	W21	W20
Initial value:	1	1	1	1	1	1	1	1
R/W:	R/W	R/W	R/W	R/W	R/W	R/W	R/W	R/W

Bit:	7	6	5	4	3	2	1	0
	W13	W12	W11	W10	W03	W02	W01	W00
Initial value:	1	1	1	1	1	1	1	1
R/W:	R/W	R/W	R/W	R/W	R/W	R/W	R/W	R/W

Bits 15 to 12—CS3 Space Wait Specification (W33, W32, W31, W30): Specifies the number of waits for CS3 space access.

Bit 15 W33	Bit 14 W32	Bit 13 W31	Bit 12 W30	Description	
0	0	0	0	No wait (external wait input disabled)	
0	0	0	1	1 wait external wait input enabled	
	...				
1	1	1	1	15 wait external wait input enabled	(initial value)

Bits 11 to 8—CS2 Space Wait Specification (W23, W22, W21, W20): Specifies the number of waits for CS2 space access.

Bit 11 W23	Bit 10 W22	Bit 9 W21	Bit 8 W20	Description	
0	0	0	0	No wait (external wait input disabled)	
0	0	0	1	1 wait external wait input enabled	
	...				
1	1	1	1	15 wait external wait input enabled	(initial value)

Bits 7 to 4—CS1 Space Wait Specification (W13, W12, W11, W10): Specifies the number of waits for CS1 space access.

Bit 7 W13	Bit 6 W12	Bit 5 W11	Bit 4 W10	Description	
0	0	0	0	No wait (external wait input disabled)	
0	0	0	1	1 wait external wait input enabled	
	...				
1	1	1	1	15 wait external wait input enabled	(initial value)

Bits 3 to 0—CS0 Space Wait Specification (W03, W02, W01, W00): Specifies the number of waits for CS0 space access.

Bit 3 W03	Bit 2 W02	Bit 1 W01	Bit 0 W00	Description	
0	0	0	0	No wait (external wait input disabled)	
0	0	0	1	1 wait external wait input enabled	
	...				
1	1	1	1	15 wait external wait input enabled	(initial value)

8.2.4 Wait Control Register 2 (WCR2)

WCR2 is a 16-bit read/write register that specifies the number of access cycles for DRAM space and CS space for DMA single address mode transfers.

Do not perform any DMA single address transfers before WCR2 is set.

WCR2 is initialized by power-on resets to H'000F, but is not initialized by software standbys.

Bit:	15	14	13	12	11	10	9	8
	—	—	—	—	—	—	—	—
Initial value:	0	0	0	0	0	0	0	0
R/W:	R	R	R	R	R	R	R	R

Bit:	7	6	5	4	3	2	1	0
	—	—	DDW1	DDW0	DSW3	DSW2	DSW1	DSW0
Initial value:	0	0	0	0	1	1	1	1
R/W:	R	R	R/W	R/W	R/W	R/W	R/W	R/W

Bits 15 to 6—Reserved: These bits always read as 0. The write value should always be 0.

Bits 5 and 4—DRAM Space DMA Single Address Mode Access Wait Specification (DDW1, DDW0): Specifies the number of waits for DRAM space access during DMA single address mode accesses. These bits are independent of the DWW and DWR bits of the DCR.

Bit 5 DDW1	Bit 4 DDW0	Description	
0	0	2-cycle (no wait) external wait disabled	(initial value)
	1	3-cycle (1 wait) external wait disabled	
1	0	4-cycle (2 wait) external wait enabled	
	1	5-cycle (3 wait) external wait enabled	

Bits 3 to 0—CS Space DMA Single Address Mode Access Wait Specification (DSW3, DSW2, DSW1, DSW0): Specifies the number of waits for CS space access (0 to 15) during DMA single address mode accesses. These bits are independent of the W bits of the WCR1.

Bit 3 DSW3	Bit 2 DSW2	Bit 1 DSW1	Bit 0 DSW0	Description	
0	0	0	0	No wait (external wait input disabled)	
0	0	0	1	1 wait (external wait input enabled)	
	...				
1	1	1	1	15 wait (external wait input enabled)	(initial value)

8.2.5 DRAM Area Control Register (DCR)

DCR is a 16-bit read/write register that selects the number of waits, operation mode, number of address multiplex shifts and the like for DRAM control.

After a power-on reset, write the initial values to the bits in DCR and do not change the values afterward.

Do not perform any DRAM space accesses before DCR initial settings are completed.

DCR is initialized by power-on resets to H'0000, but is not initialized by software standbys.

Bit:	15	14	13	12	11	10	9	8
	TPC	RCD	TRAS1	TRAS0	DWW1	DWW0	DWR1	DWR0
Initial value:	0	0	0	0	0	0	0	0
R/W:	R/W	R/W	R/W	R/W	R/W	R/W	R/W	R/W

Bit:	7	6	5	4	3	2	1	0
	DIW	—	BE	RASD	—	SZ0	AMX1	AMX0
Initial value:	0	0	0	0	0	0	0	0
R/W:	R/W	R	R/W	R/W	R	R/W	R/W	R/W

Bit 15—RAS Precharge Cycle Count (TPC): Specifies the minimum number of cycles after $\overline{\text{RAS}}$ is negated before next assert.

Bit 15 TPC	Description	
0	1.5 cycles	(initial value)
1	2.5 cycles	

Bit 14—RAS-CAS Delay Cycle Count (RCD): Specifies the number of row address output cycles.

Bit 14 RCD	Description	
0	1 cycle	(initial value)
1	2 cycles	

Bits 13 and 12—CAS-Before-RAS Refresh RAS Assert Cycle Count (TRAS1 and TRAS0): Specify the number of RAS assert cycles for CAS before RAS refreshes.

Bit 13 TRAS1	Bit 12 TRAS0	Description	
0	0	2.5 cycles	(initial value)
	1	3.5 cycles	
1	0	4.5 cycles	
	1	5.5 cycles	

Bits 11 and 10—DRAM Write Cycle Wait Count (DWW1 and DWW0): Specifies the number of DRAM write cycle column address output cycles.

Bit 11 DWW1	Bit 10 DWW0	Description	
0	0	2-cycle (no wait) external wait disabled	(initial value)
	1	3-cycle (1 wait) external wait disabled	
1	0	4-cycle (2 wait) external wait enabled	
	1	5-cycle (3 wait) external wait enabled	

Bits 9 and 8—DRAM Read Cycle Wait Count (DWR1 and DWR0): Specifies the number of DRAM read cycle column address output cycles.

Bit 9 DWR1	Bit 8 DWR0	Description	
0	0	2-cycle (no wait) external wait disabled	(initial value)
	1	3-cycle (1 wait) external wait disabled	
1	0	4-cycle (2 wait) external wait enabled	
	1	5-cycle (3 wait) external wait enabled	

Bit 7—DRAM Idle Cycle Count (DIW): Specifies whether to insert idle cycles, either when accessing a different external space (CS space) or when doing a DRAM write, after DRAM reads.

Bit 7 DIW	Description	
0	No idle cycles	(initial value)
1	1 idle cycle	

Bit 6—Reserved: This bit always read as 0. The write value should always be 0.

Bit 5—Burst Enable (BE): Specifies the DRAM operation mode.

Bit 5 BE	Description	
0	Burst disabled	(initial value)
1	DRAM high-speed page mode enabled.	

Bit 4—RAS Down Mode (RASD): Specifies the DRAM operation mode.

Bit 4 RASD	Description	
0	Access DRAM by RAS up mode	(initial value)
1	Access DRAM by RAS down mode	

Bit 3—Reserved: This bit read 0 after a reset. The write value should always be 0. Operation is not guaranteed if the write value is 1.

Bit 2—DRAM Bus Width Specification (SZ0): Specifies the DRAM space bus width.

Bit 2 SZ0	Description	
0	Byte (8-bit)	(initial value)
1	Word (16-bit)	

Bits 1 and 0—DRAM Address Multiplex (AMX1 and AMX0): Specifies the DRAM address multiplex count.

Bit 1 AMX1	Bit 0 AMX0	Description
0	0	9 bit (initial value)
	1	10 bit
1	0	11 bit
	1	12 bit

8.2.6 Refresh Timer Control/Status Register (RTCSR)

RTCSR is a 16-bit read/write register that selects the refresh mode and the clock input to the refresh timer counter (RTCNT), and controls compare match interrupts (CMI).

RTCSR is initialized by power-on resets to H'0000, but is not initialized by software standbys.

Bit:	15	14	13	12	11	10	9	8
	—	—	—	—	—	—	—	—
Initial value:	0	0	0	0	0	0	0	0
R/W:	R	R	R	R	R	R	R	R

Bit:	7	6	5	4	3	2	1	0
	—	CMF	CMIE	CKS2	CKS1	CKS0	RFSH	RMD
Initial value:	0	0	0	0	0	0	0	0
R/W:	R	R/W	R/W	R/W	R/W	R/W	R/W	R/W

Bits 15 to 7—Reserved: These bits always read as 0. The write value should always be 0

Bit 6—Compare Match Flag (CMF): This status flag, which indicates that the values of RTCNT and RTCOR match, is set/cleared under the following conditions:

Bit 6 CMF	Description
0	Clear condition: After RTCSR is read when CMF is 1, 0 is written in CMF. (initial value)
1	Set condition: RTCNT = RTCOR. When both RTCNT and RTCOR are in an initialized state (when values have not been rewritten since initialization, and RTCNT has not had its value changed due to a count-up), RTCNT and RTCOR match, as both are H'0000, but in this case CMF is not set.

Bit 5—Compare Match Interrupt Enable (CMIE): Enables or disables an interrupt request caused by the CMF bit of the RTCSR when CMF is set to 1.

Bit 5 CMIE	Description	
0	Disables an interrupt request caused by CMF	(initial value)
1	Enables an interrupt request caused by CMF	

Bits 4 to 2—Clock Select (CKS2 to CKS0): Select the clock to input to RTCNT from among the seven types of internal clock obtained from dividing the system clock (ϕ).

Bit 4 CKS2	Bit 3 CKS1	Bit 2 CKS0	Description	
0	0	0	Stops count-up	(initial value)
		1	ϕ/2	
	1	0	ϕ/8	
		1	ϕ/32	
1	0	0	ϕ/128	
		1	ϕ/512	
	1	0	ϕ/2048	
		1	ϕ/4096	

Bit 1—Refresh Control (RFSH): Selects whether to use refresh control for DRAM.

Bit 1 RFSH	Description	
0	Do not refresh DRAM	(initial value)
1	Refresh DRAM	

Bit 0—Refresh Mode (RMD): When the RFSH bit is 1, this bit selects normal refresh or self-refresh. When the RFSH bit is 1, self-refresh mode is entered immediately after the RMD bit is set to 1. When RMD is cleared to 0, a CAS-before-RAS refresh is performed at the interval set in the refresh time constant register (RTCNT).

When set for self-refresh, the this LSI enters self-refresh mode immediately unless it is in the middle of a DRAM access. If it is, it enters self-refresh mode when the access ends. Refresh requests from the interval timer are ignored in self-refresh mode.

Bit 0 RMD	Description	
0	CAS-before-RAS refresh	(initial value)
1	Self-refresh	

8.2.7 Refresh Timer Counter (RTCNT)

RTCNT is a 16-bit read/write register that is used as an 8-bit up counter for refreshes or generating interrupt requests.

RTCNT counts up with the clock selected by the CKS2 to CKS0 bits of the RTCSR. RTCNT values can always be read/written by the CPU. When RTCNT matches RTCOR, RTCNT is cleared to H'0000 and the CMF flag of the RTCSR is set to 1. If the RFSH bit of RTCSR is 1 and the RMD bit is 0 at this time, a CAS-before-RAS refresh is performed. Additionally, if the CMIE bit of RTCSR is a 1, a compare match interrupt (CMI) is generated.

Bits 15 to 8 are reserved and play no part in counter operation. They are always read as 0.

RTCNT is initialized by power-on resets to H'0000, but is not initialized by software standbys.

Bit:	15	14	13	12	11	10	9	8
	—	—	—	—	—	—	—	—
Initial value:	0	0	0	0	0	0	0	0
R/W:	R	R	R	R	R	R	R	R

Bit:	7	6	5	4	3	2	1	0
Initial value:	0	0	0	0	0	0	0	0
R/W:	R/W	R/W	R/W	R/W	R/W	R/W	R/W	R/W

8.2.8 Refresh Time Constant Register (RTCOR)

RTCOR is a 16-bit read/write register that establishes the compare match period with RTCNT. The values of RTCOR and RTCNT are constantly compared. When the values correspond, the compare match flag of RTCSR is set and RTCNT is cleared to 0.

When the refresh bit (RFSH) of the RTCSR is set to 1 and the RMD bit is 0, a refresh request signal is produced by this match. The refresh request signal is held until a refresh operation is performed. If the refresh request is not processed before the next match, the previous request becomes ineffective.

When the CMIE bit of the RTSCR is set to 1, an interrupt request is sent to the interrupt controller by this match signal. The interrupt request is output continuously until the CMF bit of the RTSCR is cleared.

Bits 15 to 8 are reserved and cannot be used in setting the period. They always read 0.

RTCOR is initialized by power-on resets to H'0000, but is not initialized by software standbys.

Bit:	15	14	13	12	11	10	9	8
	—	—	—	—	—	—	—	—
Initial value:	0	0	0	0	0	0	0	0
R/W:	R	R	R	R	R	R	R	R

Bit:	7	6	5	4	3	2	1	0
Initial value:	0	0	0	0	0	0	0	0
R/W:	R/W	R/W	R/W	R/W	R/W	R/W	R/W	R/W

8.3 Accessing Ordinary Space

A strobe signal is output by ordinary space accesses to provide primarily for SRAM or ROM direct connections.

8.3.1 Basic Timing

Figure 8.3 shows the basic timing of ordinary space accesses. Ordinary access bus cycles are performed in 2 states.

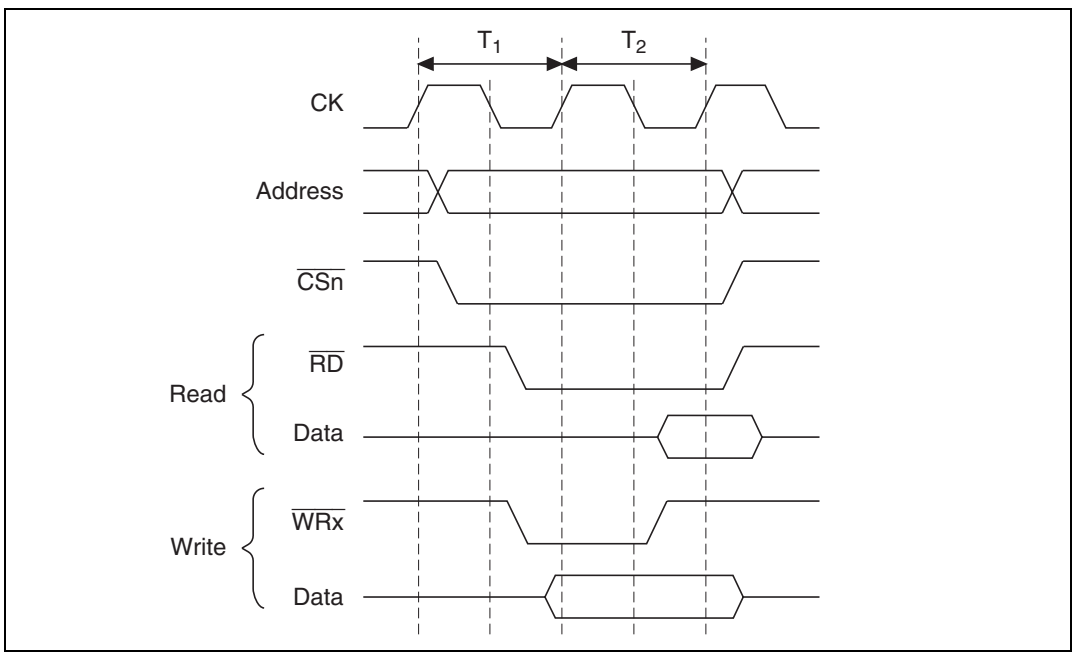

Figure 8.3 Basic Timing of Ordinary Space Access

During a read, irrespective of operand size, all bits in the data bus width for the access space (address) are fetched by the LSI on $\overline{RD}$, using the required byte locations.

During a write, the following signals are associated with transfer of these actual byte locations: $\overline{WRH}$ (bits 15 to 8) and $\overline{WRL}$ (bits 7 to 0).

8.3.2 Wait State Control

The number of wait states inserted into ordinary space access states can be controlled using the WCR settings (figure 8.4). The specified number of Tw cycles are inserted as software wait cycles at the timing shown in figure 8.4.

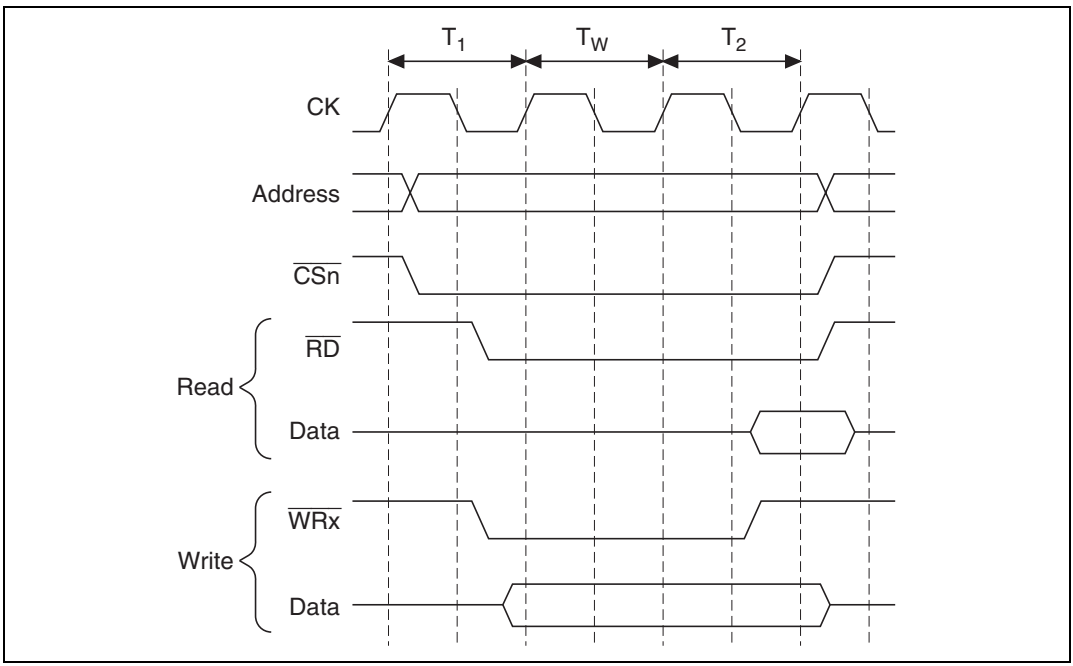

Figure 8.4 Wait Timing of Ordinary Space Access (Software Wait Only)

When the wait is specified by software using WCR, the wait input $\overline{\text{WAIT}}$ signal from outside is sampled. Figure 8.5 shows the $\overline{\text{WAIT}}$ signal sampling. The $\overline{\text{WAIT}}$ signal is sampled at the clock rise one cycle before the clock rise when T_w state shifts to T_2 state.

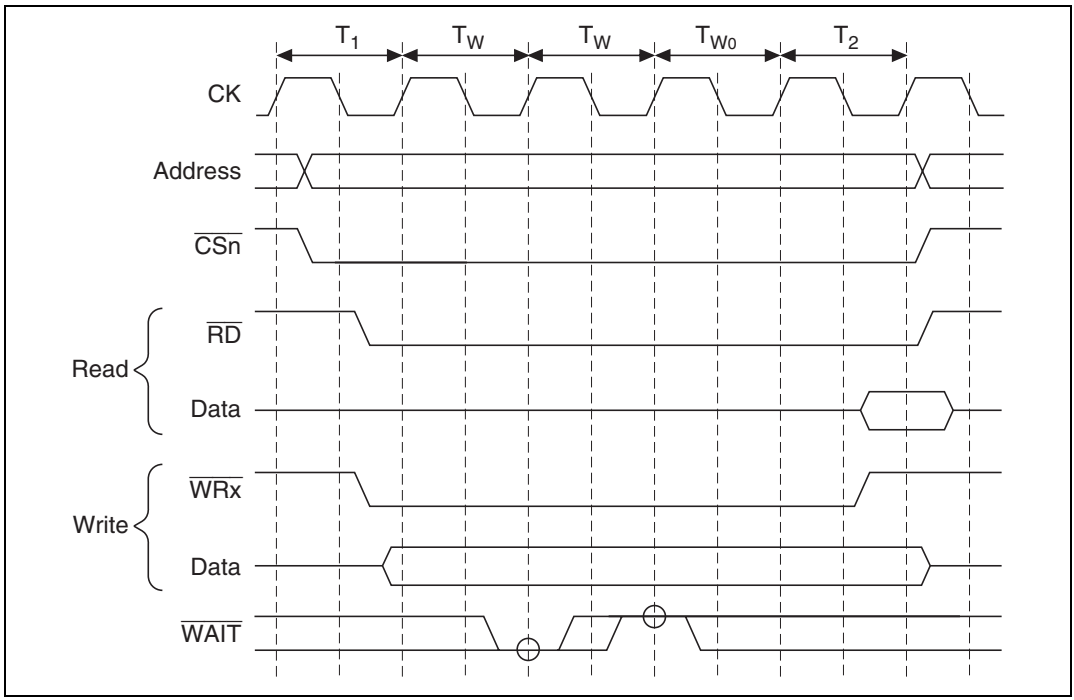

Figure 8.5 Wait State Timing of Ordinary Space Access (Wait States from Software Wait 2 State + $\overline{\text{WAIT}}$ Signal)

8.3.3 $\overline{CS}$ Assert Period Extension

Idle cycles can be inserted to prevent extension of the $\overline{RD}$ signal or $\overline{WRx}$ signal assert period beyond the length of the $\overline{CSn}$ signal assert period by setting the SW3 to SW0 bits of BCR2. This allows for flexible interfaces with external circuitry. The timing is shown in figure 8.6. T_h and T_f cycles are added respectively before and after the ordinary cycle. Only $\overline{CSn}$ is asserted in these cycles; $\overline{RD}$ and $\overline{WRx}$ signals are not. Further, data is extended up to the T_f cycle, which is effective for gate arrays and the like, which have slower write operations.

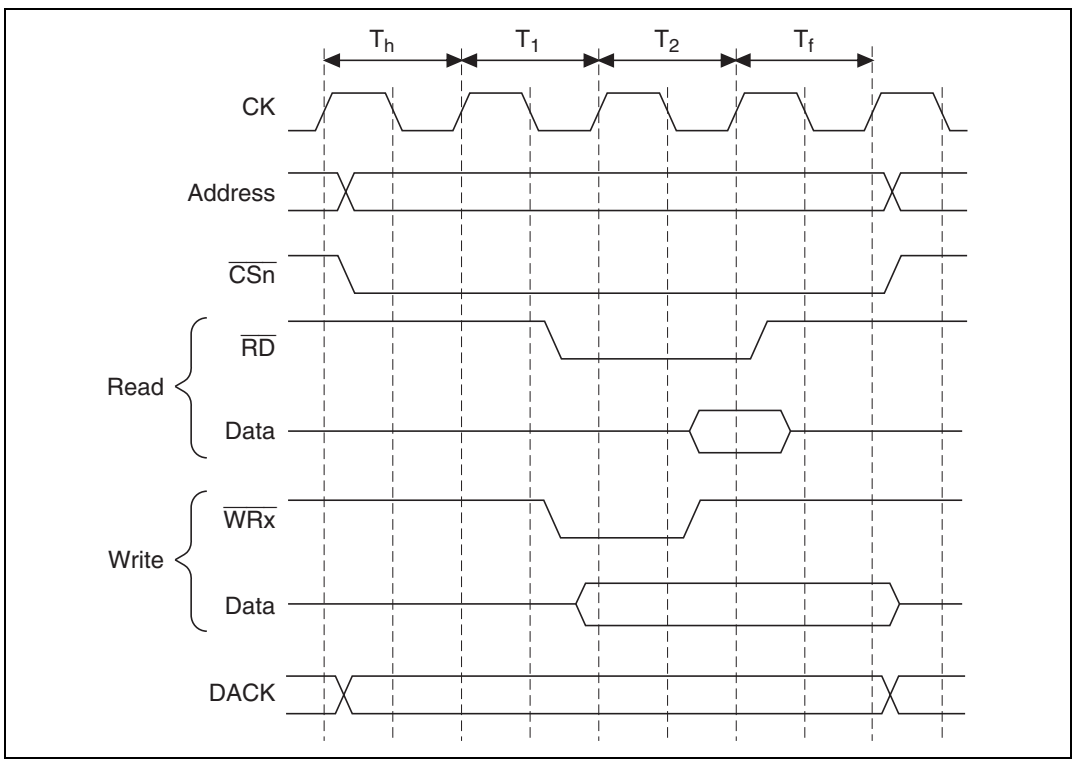

Figure 8.6 $\overline{CS}$ Assert Period Extension Function

8.4 DRAM Access

8.4.1 DRAM Direct Connection

When address space A31 to A24 = H'01 has been accessed, the corresponding space becomes a 16-Mbyte DRAM space, and the DRAM interface function can be used to directly connect this LSI to DRAM.

Row address and column address are always multiplexed for DRAM space. The amount of row address multiplexing can be selected as from 9 to 12 bits by setting the AMX1 and AMX0 bits of the DCR.

Table 8.4 AMX Bits and Address Multiplex Output

			Row Address		Column Address	
AMX1	**AMX0**	**Shift Amount**	**Output Address**	**Output Pins**	**Output Address**	**Output Pins**
0	0	9 bits	A21 to A15	A21 to A15	A21 to A0	A21 to A0
			A14 to A0	A23 to A9		
	1	10 bits	A21 to A14	A21 to A14	A21 to A0	A21 to A0
			A13 to A0	A23 to A10		
1	0	11 bits	A21 to A13	A21 to A13	A21 to A0	A21 to A0
			A12 to A0	A23 to A11		
	1	12 bits	A21 to A12	A21 to A12	A21 to A0	A21 to A0
			A11 to A0	A23 to A12		

In addition to ordinary read and write accesses, burst mode access using high speed page mode is supported.

8.4.2 Basic Timing

This LSI supports 2 CAS format DRAM access. The DRAM access basic timing is a minimum of 3 cycles for normal mode. Figure 8.7 shows the basic DRAM access timing. DRAM space access is controlled by $\overline{RAS}$, $\overline{CASx}$ and RDWR signals. The following signals are associated with transfer of these actual byte locations: $\overline{CASH}$ (bits 15 to 8) and $\overline{CASL}$ (bits 7 to 0). However, the signals for ordinary space, $\overline{WRx}$ and $\overline{RD}$, are also output during the DMAC single transfer column address cycle period. T_p is the precharge cycle, T_r is the RAS assert cycle, T_c is the CAS assert cycle and T_{c2} is the read data fetch cycle.

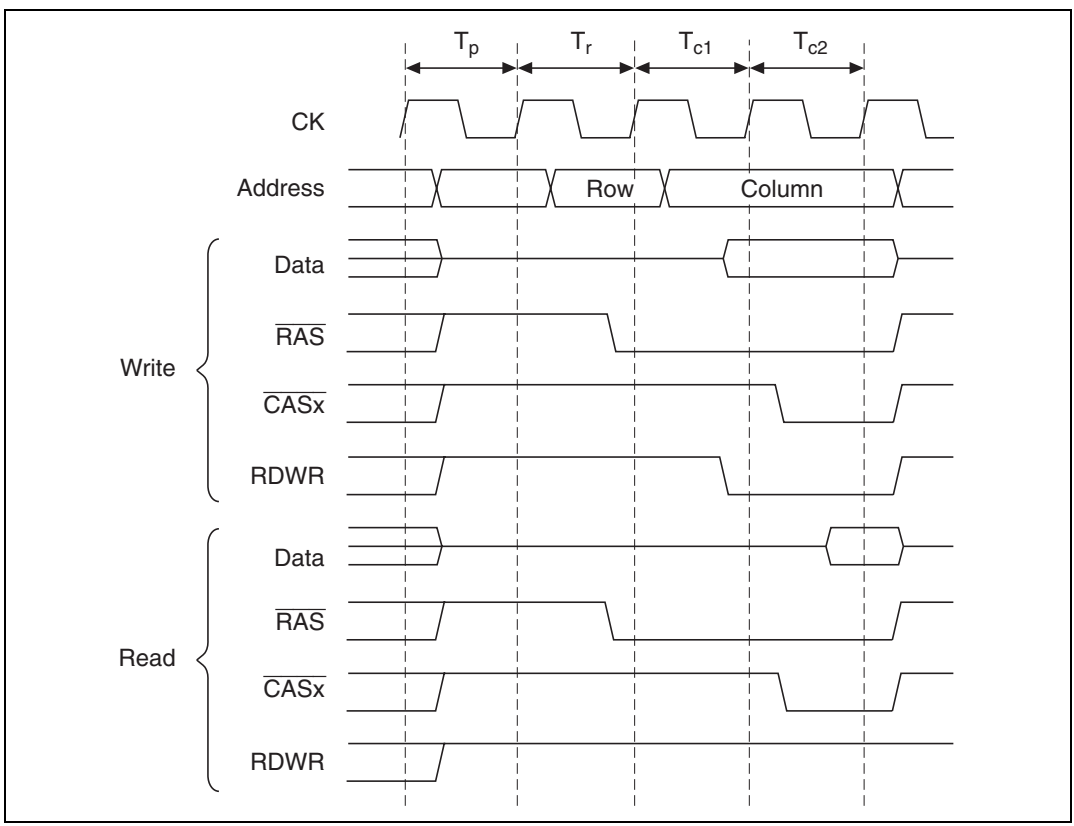

Figure 8.7 DRAM Bus Cycle (Normal Mode, TPC = 0, RCD = 0, No Waits)

8.4.3 Wait State Control

Wait state insertion during DRAM space access is controlled by setting the TPC, RCD, DWW1, DWW0, DWR1, and DWR0 bits of the DCR. TPC and RCD are common to both reads and writes. The timing with waits inserted is shown in figures 8.8 through 8.11. External waits can be inserted at the time of software waits 2, 3. The sampling location is the same as that of ordinary space: at one cycle before the T_{c2} cycle clock rise. Wait cycles are extended by external waits.

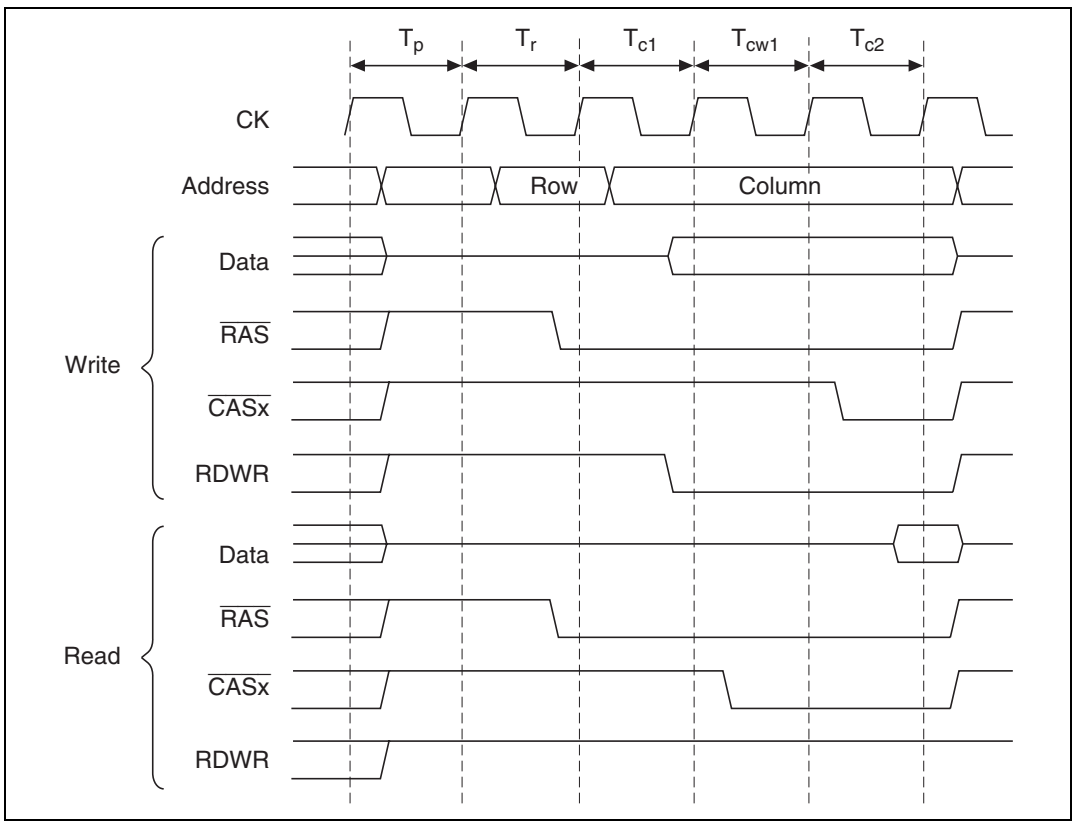

Figure 8.8 DRAM Bus Cycle (Normal Mode, TPC = 0, RCD = 0, One Wait)

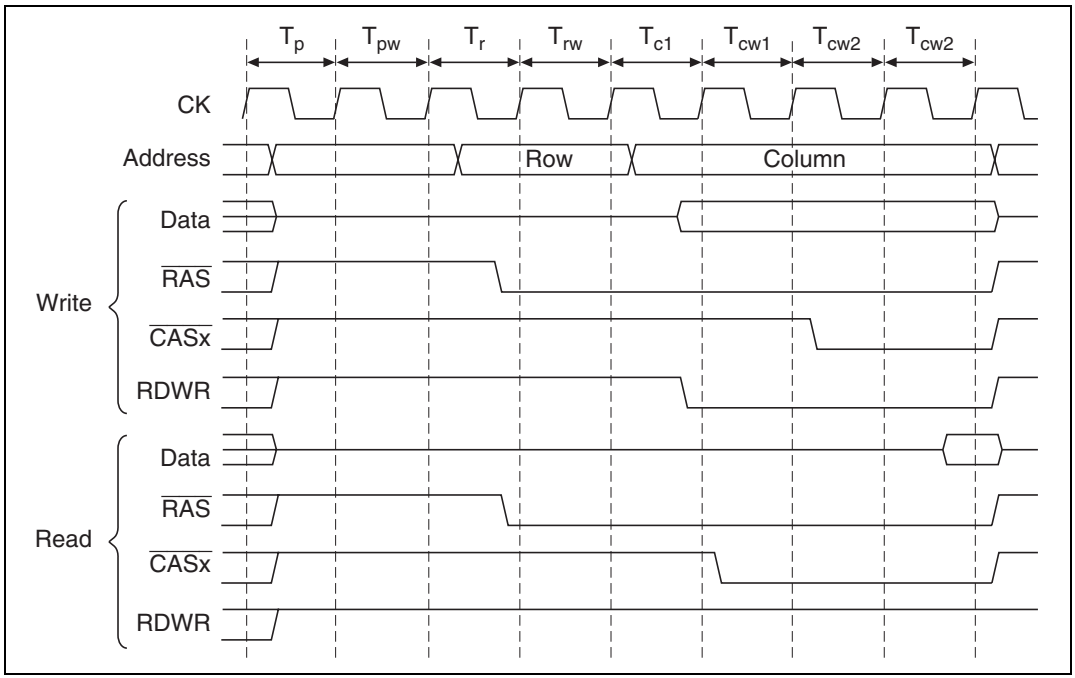

Figure 8.9 DRAM Bus Cycle (Normal Mode, TPC = 1, RCD = 1, Two Waits)

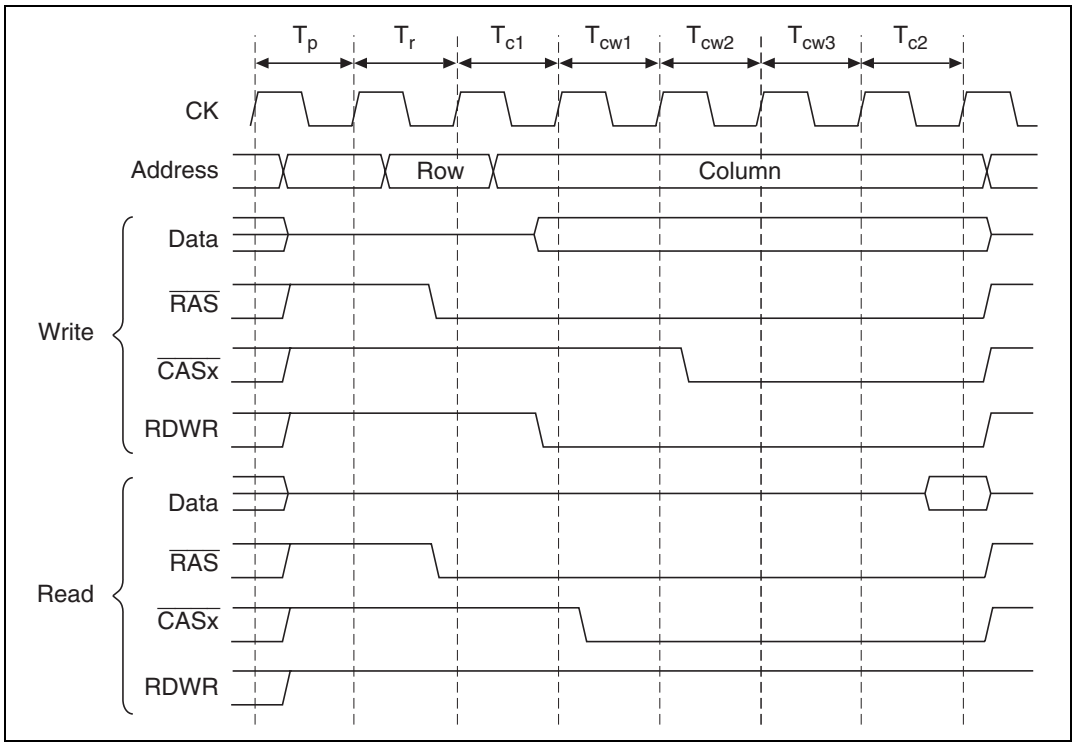

Figure 8.10 DRAM Bus Cycle (Normal Mode, TPC = 0, RCD = 0, Three Waits)

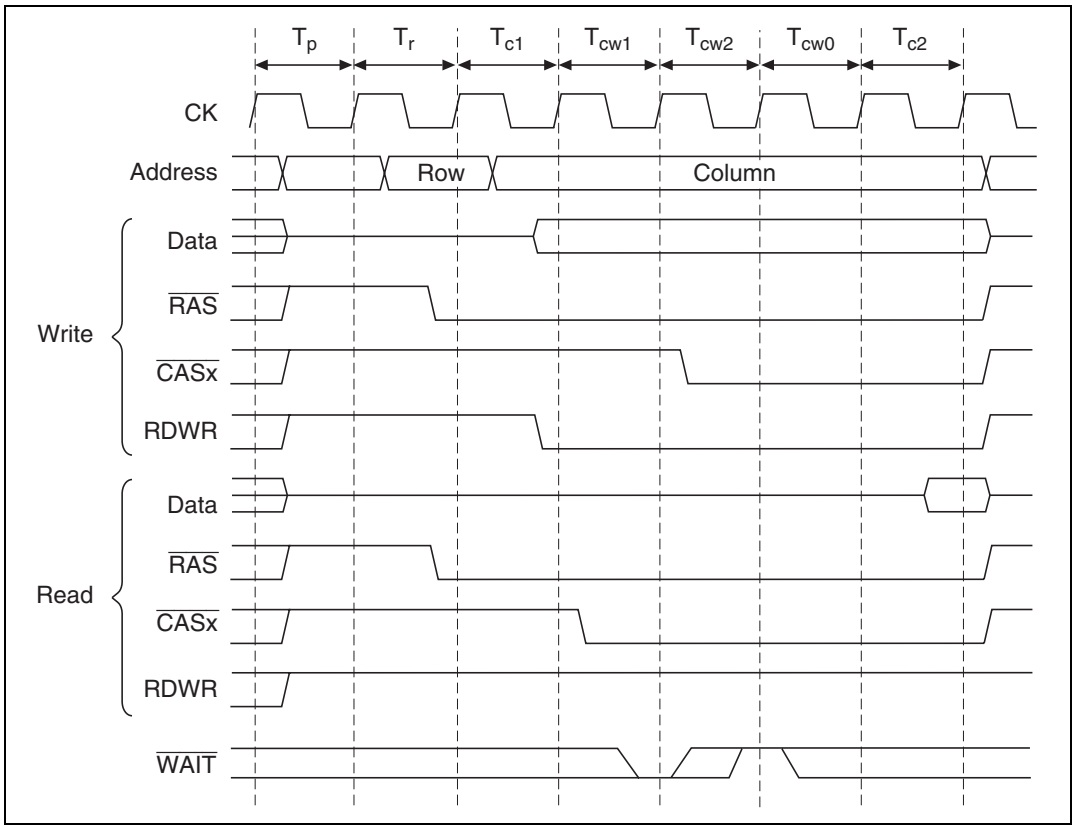

Figure 8.11 DRAM Bus Cycle
(Normal Mode, TPC = 0, RCD = 0, Two Waits + Wait Due to WAIT Signal)

8.4.4 Burst Operation

High-Speed Page Mode: When the burst enable bit (BE) of the DCR is set, burst accesses can be performed using high speed page mode. The timing is shown in figure 8.12. Wait cycles can be inserted during burst accesses by using the DCR.

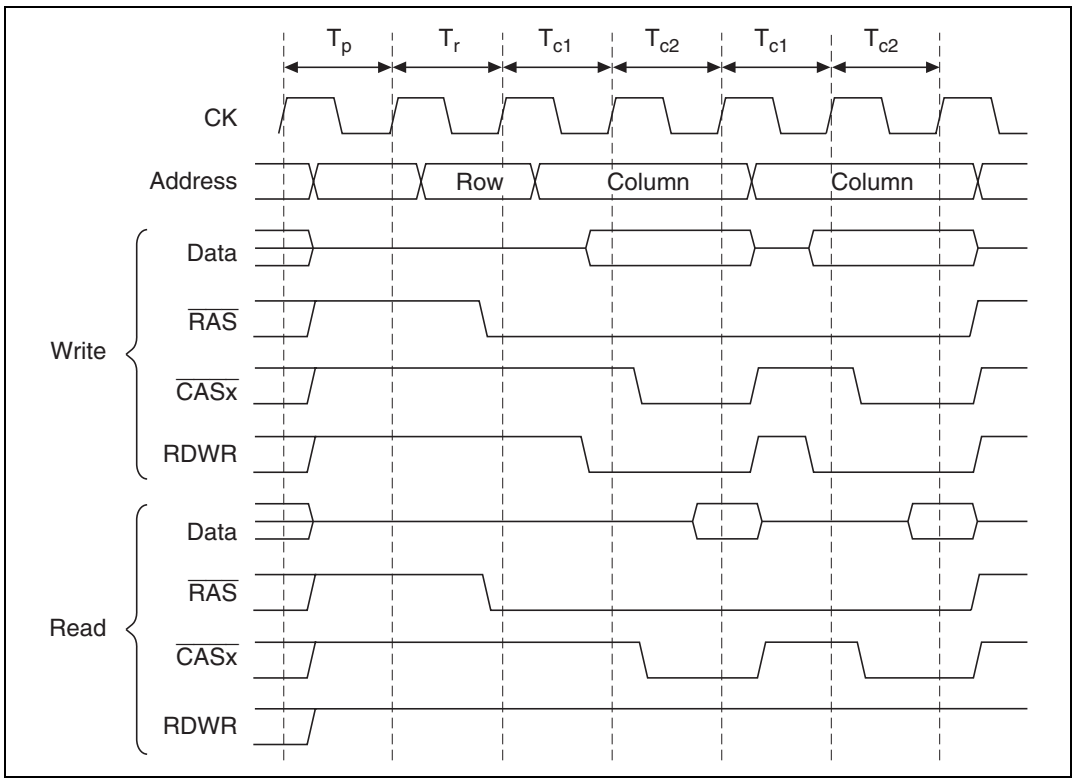

Figure 8.12 DRAM Bus Cycle (High-Speed Page Mode)

RAS Down Mode: There are some instances where even if burst operation is selected, continuous accesses to DRAM will not occur, but another space will be accessed instead part way through the access. In such cases, if the $\overline{RAS}$ signal is maintained at low level during the time the other space is accessed, it is possible to continue burst operation at the time the next DRAM same row address is accessed. This is called RAS down mode.

To use RAS down mode, set both the BE and RASD bits of the DCR to 1.

Figures 8.13 and 8.14 show operation in RAS up and down modes.

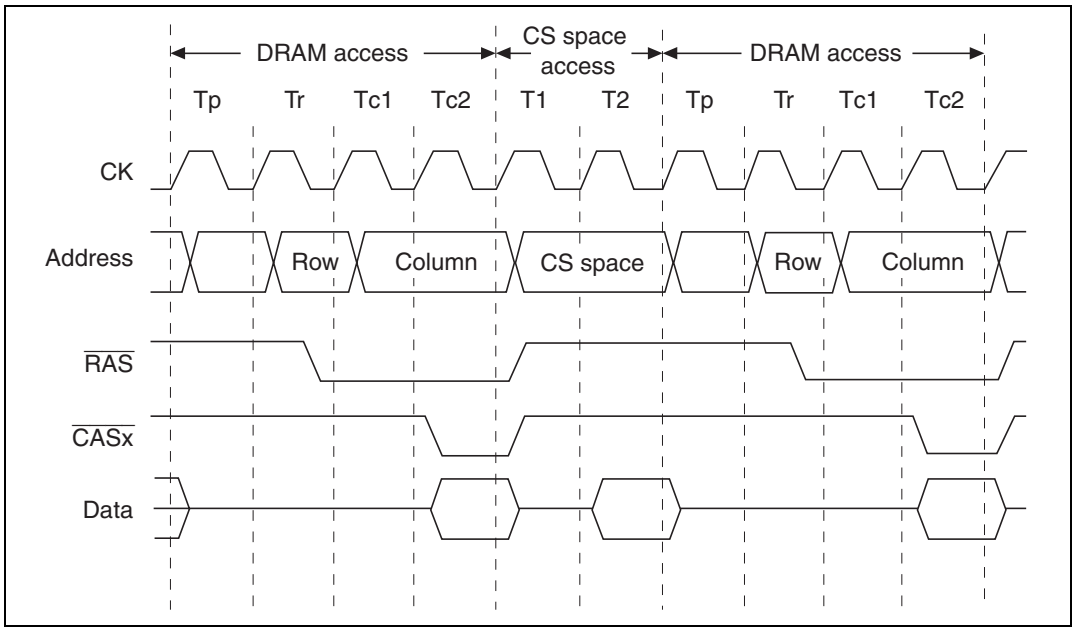

Figure 8.13 DRAM Access Normal Operation (RAS Up Mode)

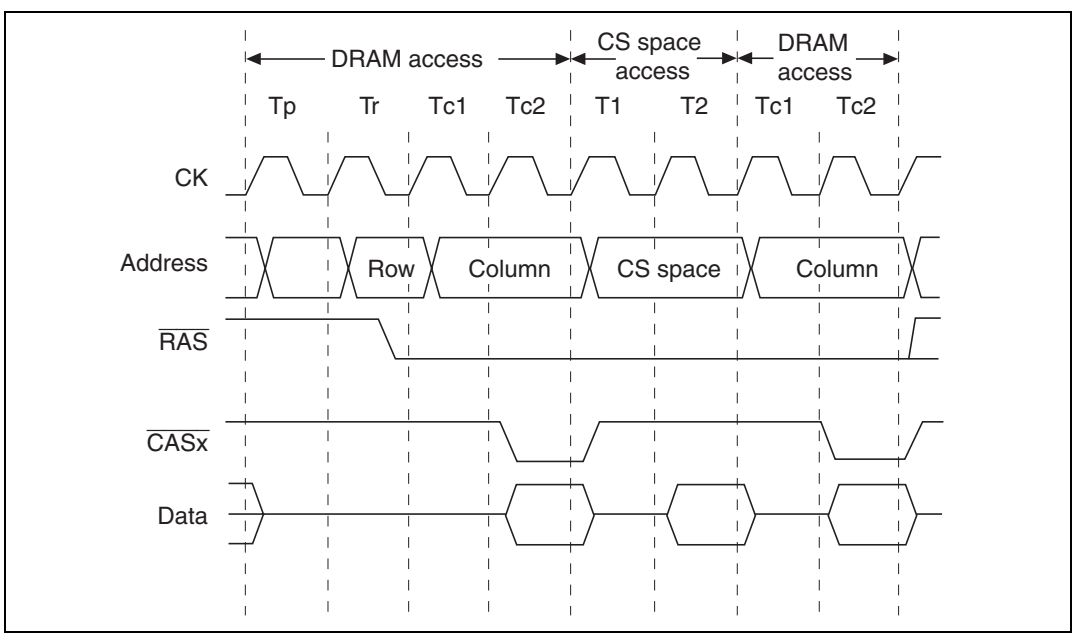

Figure 8.14 RAS Down Mode

8.4.5 Refresh Timing

The bus state controller is equipped with a function to control refreshes of DRAM. CAS-before-RAS (CBR) refresh or self-refresh can be selected by setting the RTCSR's RMD bit.

CAS-before-RAS Refresh: For CBR refreshes, set the RCR's RMD bit to 0 and the RFSH bit to 1. Also write the values in RTCNT and RTCOR necessary to fulfill the refresh interval prescribed for the DRAM being used. When a clock is selected with the CKS2 to CKS0 bits of the RSTCR, RTCNT starts counting up from the value at that time. The RTCNT value is constantly compared to the RTCOR value and a CBR refresh is performed when the two match. RTCNT is cleared at that time and the count starts again. Figure 8.15 shows the timing for the CBR refresh operation.

The number of RAS assert cycles in the refresh cycle is set by the TRAS1, TRAS0 bits of the DCR.

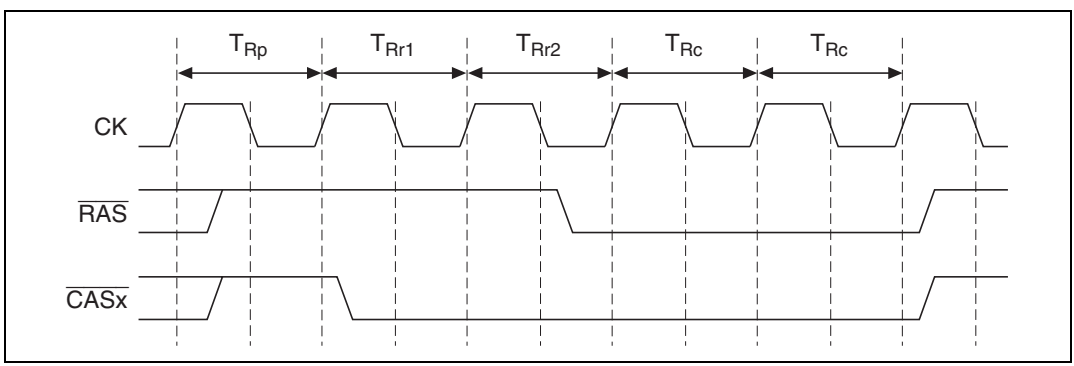

Figure 8.15 CAS-Before-RAS Refresh Timing (TRAS1, TRAS0 = 0, 0)

Self-Refresh: When both the RMD and RFSH bits of the RTCSR are set to 1, the $\overline{CAS}$ signal and $\overline{RAS}$ signal are output and the DRAM enters self-refresh mode, as shown in figure 8.16. Do not access DRAM during self-refreshes, in order to preserve DRAM data. When performing DRAM accesses, first cancel the self-refresh, then access only after doing individual refreshes for all row addresses within the time prescribed for the particular DRAM.

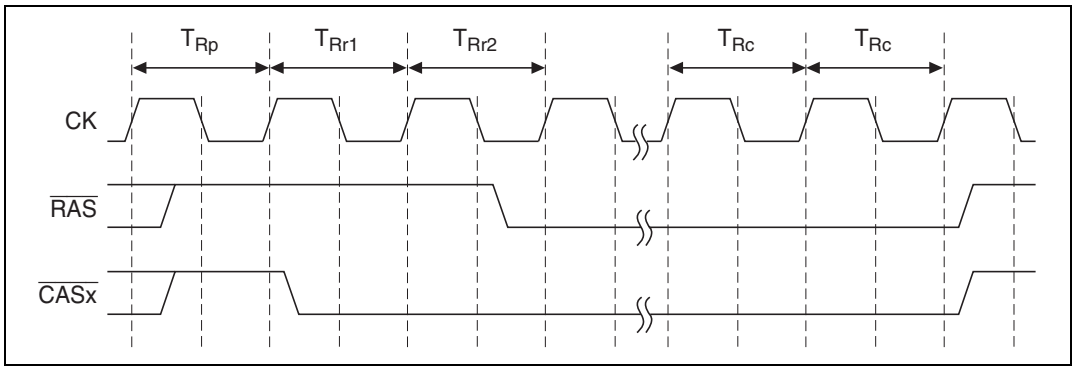

Figure 8.16 Self-Refresh Timing

8.5 Address/Data Multiplex I/O Space Access

When the BCR1 register IOE bit is set to 1, the D15 to D0 pins can be used for multiplexed address/data I/O for the CS3 space. Consequently, peripheral LSIs requiring address/data multiplexing can be directly connected to this LSI.

Address/data multiplex I/O space bus width is selected by the A14 bit, and is 8 bit when A14 = 0 and 16 bit when A14 = 1.

8.5.1 Basic Timing

When the IOE bit of the BCR1 is set to 1, CS3 space becomes address/data multiplex I/O space. When this space is accessed, addresses and data are multiplexed. When the A14 address bit is 0, the bus size becomes 8 bit and addresses and data are input and output through the D7 to D0 pins. When the A14 address bit is 1, the bus size becomes 16 bit and address output and data I/O occur through the D15 to D0 pins. Access for the address/data multiplex I/O space is controlled by the $\overline{AH}$, $\overline{RD}$ and $\overline{WRx}$ signals.

Address/data multiplex I/O space accesses are done after a 3-cycle (fixed) address output, as an ordinary space type access (figure 8.17).

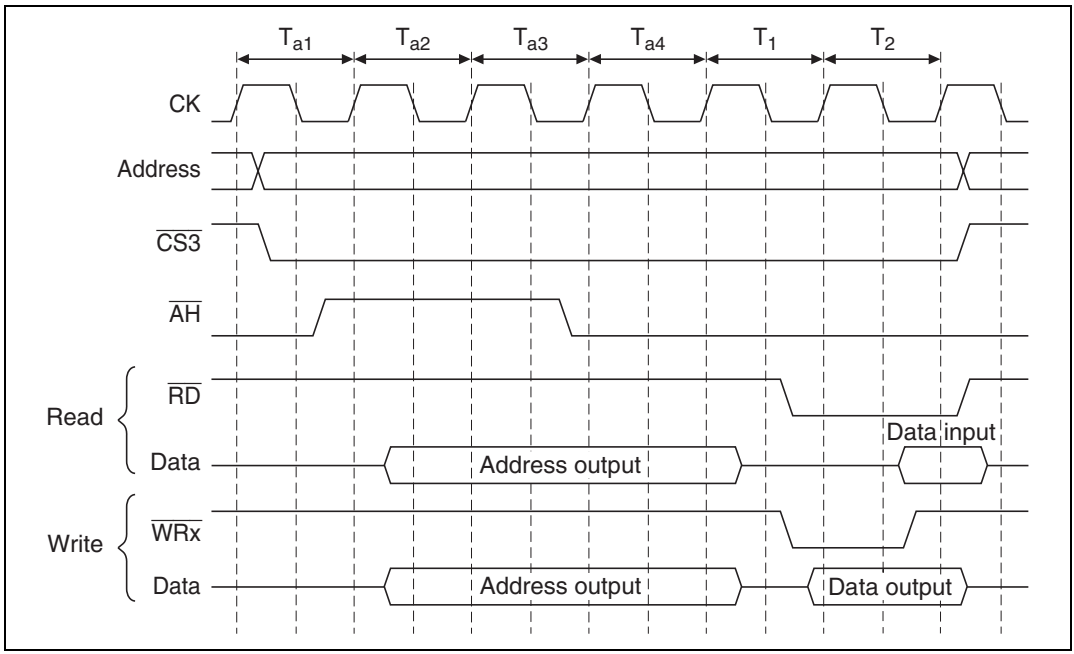

Figure 8.17 Address/Data Multiplex I/O Space Access Timing (No Waits)

8.5.2 Wait State Control

Setting the WCR controls waits during address/data multiplex I/O space accesses. Software wait and external wait insertion timing is the same as during ordinary space accesses. The timing for one software wait + one external wait inserted is shown in figure 8.18.

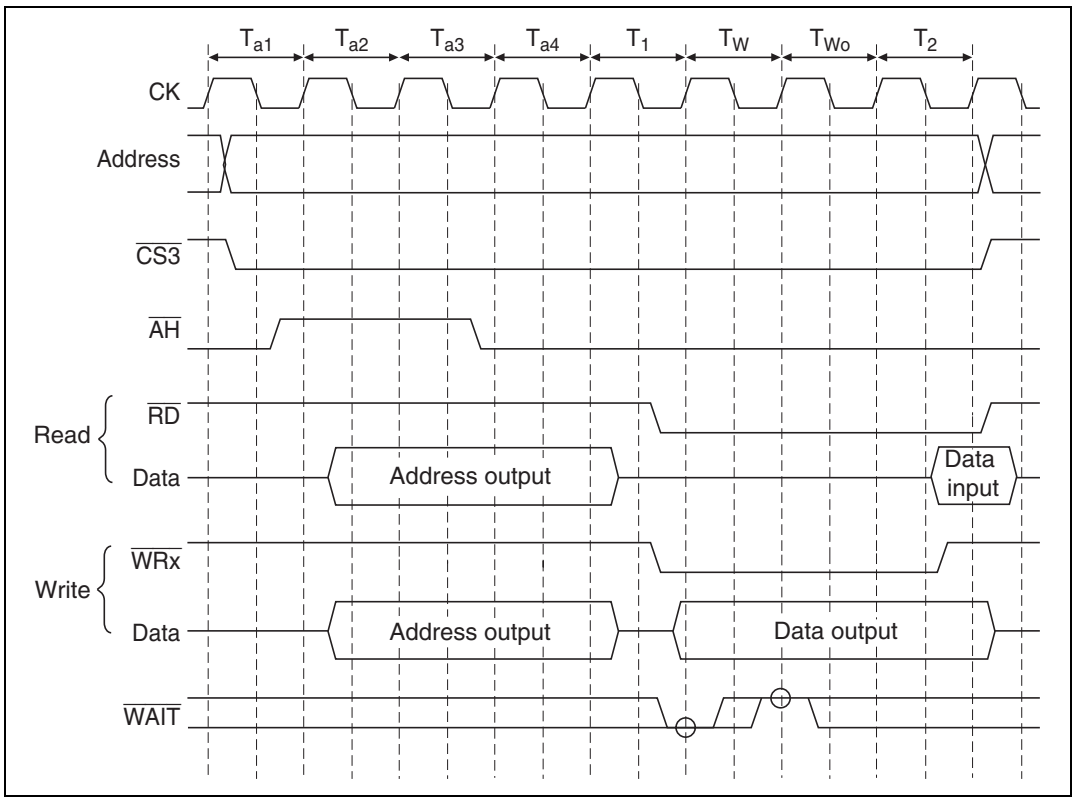

Figure 8.18 Address/Data Multiplex I/O Space Access Wait State Timing (One Software Wait + One External Wait)

8.5.3 CS Assertion Extension

The timing diagram when CS assertion extension is set for address/data multiplexed I/O space access is shown in figure 8.19.

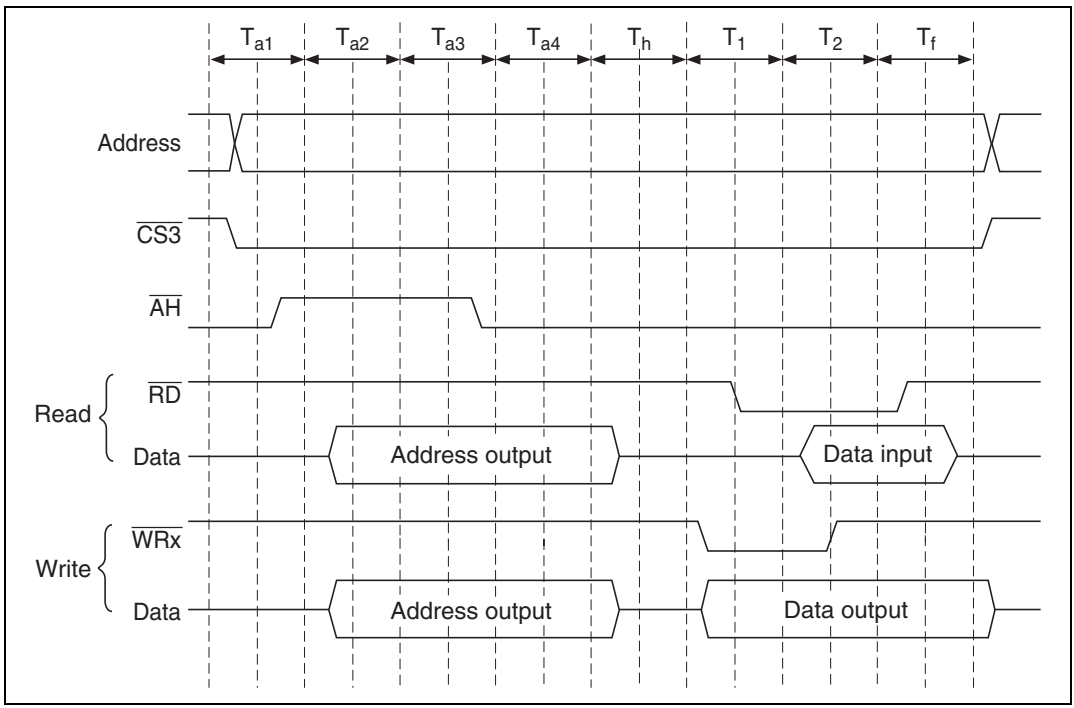

Figure 8.19 Wait Timing for Address/Data Multiplexed I/O Space When CS Assertion Extension is Set

8.6 Waits between Access Cycles

When a read from a slow device is completed, data buffers may not go off in time to prevent data conflicts with the next access. If there is a data conflict during memory access, the problem can be solved by inserting a wait in the access cycle.

To enable detection of bus cycle starts, waits can be inserted between access cycles during continuous accesses of the same CS space by negating the $\overline{\text{CSn}}$ signal once.

8.6.1 Prevention of Data Bus Conflicts

For the two cases of write cycles after read cycles, and read cycles for a different area after read cycles, waits are inserted so that the number of idle cycles specified by the IW31 to IW00 bits of the BCR2 and the DIW of the DCR occur. When idle cycles already exist between access cycles, only the number of empty cycles remaining beyond the specified number of idle cycles are inserted.

Figure 8.20 shows an example of idles between cycles. In this example, 1 idle between CSn space cycles has been specified, so when a CSm space write immediately follows a CSn space read cycle, 1 idle cycle is inserted.

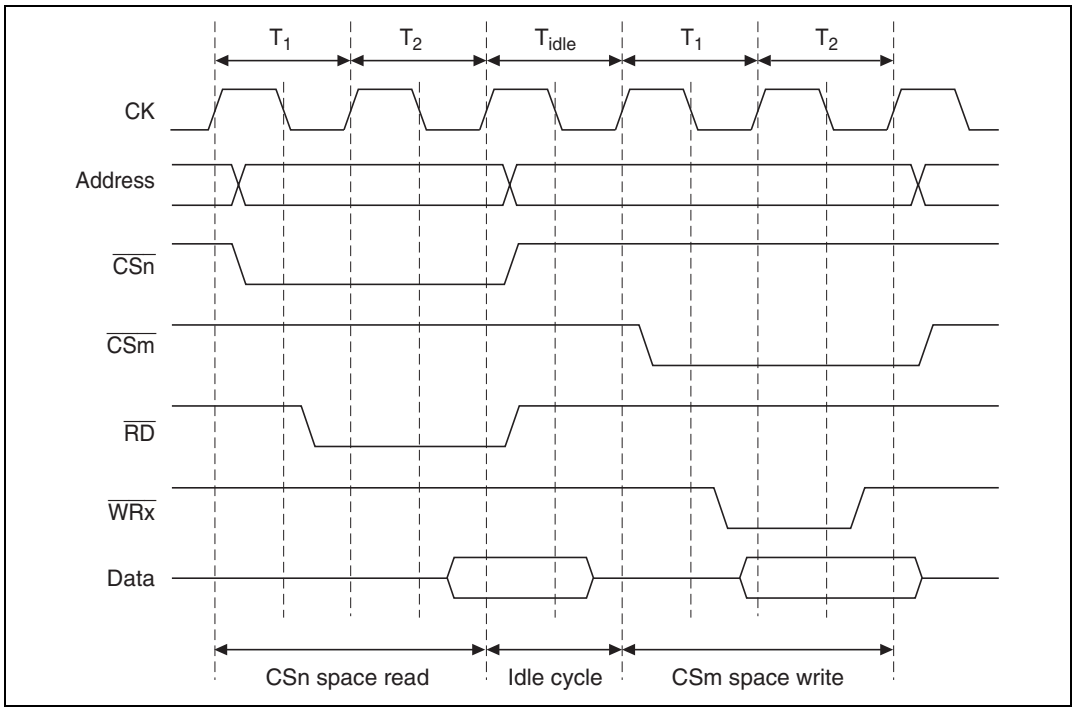

Figure 8.20 Idle Cycle Insertion Example

IW31 and IW30 specify the number of idle cycles required after a CS3 space read either to read other external spaces, or for this LSI, to do write accesses. In the same manner, IW21 and IW20 specify the number of idle cycles after a CS2 space read, IW11 and IW10, the number after a CS1 space read, and IW01 and IW00, the number after a CS0 space read.

DIW specifies the number of idle cycles required, after a DRAM space read either to read other external spaces (CS space), or for this LSI, to do write accesses.

0 to 3 cycles can be specified for CS space, and 0 to 1 cycle for DRAM space.

8.6.2 Simplification of Bus Cycle Start Detection

For consecutive accesses of the same CS space, waits are inserted so that the number of idle cycles designated by the CW3 to CW0 bits of the BCR2 occur. However, for write cycles after reads, the number of idle cycles inserted will be the larger of the two values defined by the IW and CW bits. When idle cycles already exist between access cycles, waits are not inserted. Figure 8.21 shows an example. A continuous access idle is specified for CSn space, and CSn space is consecutively write accessed.

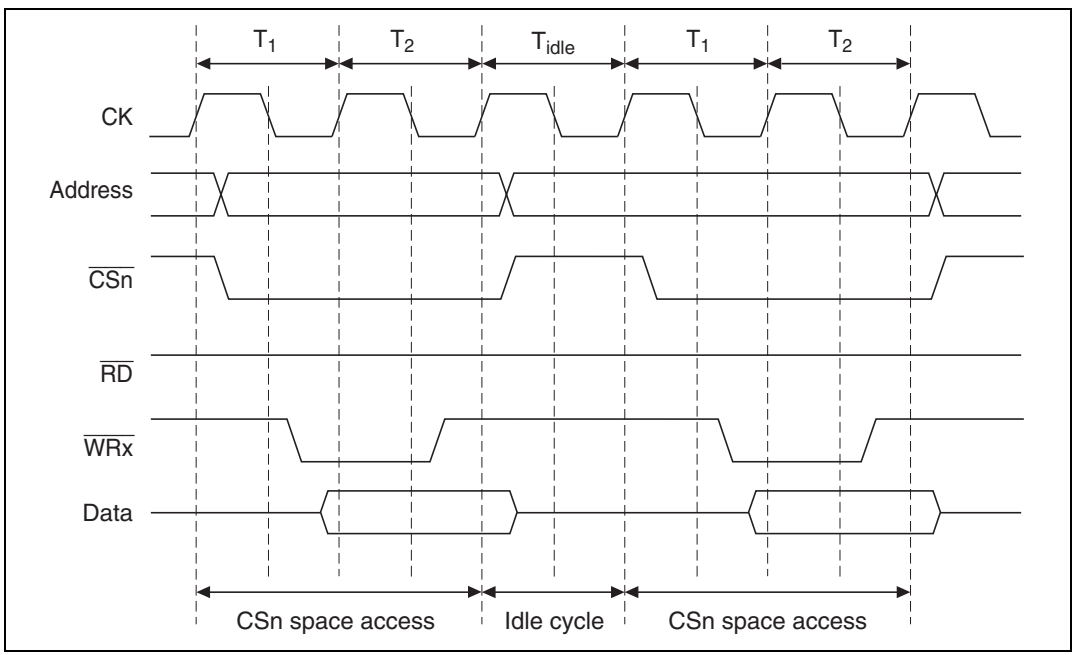

Figure 8.21 Same Space Consecutive Access Idle Cycle Insertion Example

8.7 Bus Arbitration

It has two internal bus masters, the CPU and the DMAC. The priority ranking for determining bus right transfer between these bus masters is:

Refresh > DMAC > CPU

8.8 Memory Connection Examples

Figures 8.22 to 8.27 show examples of the memory connections.

As A21 to A18 become input ports in power-on reset, they should be handled (e.g. pulled down) as necessary.

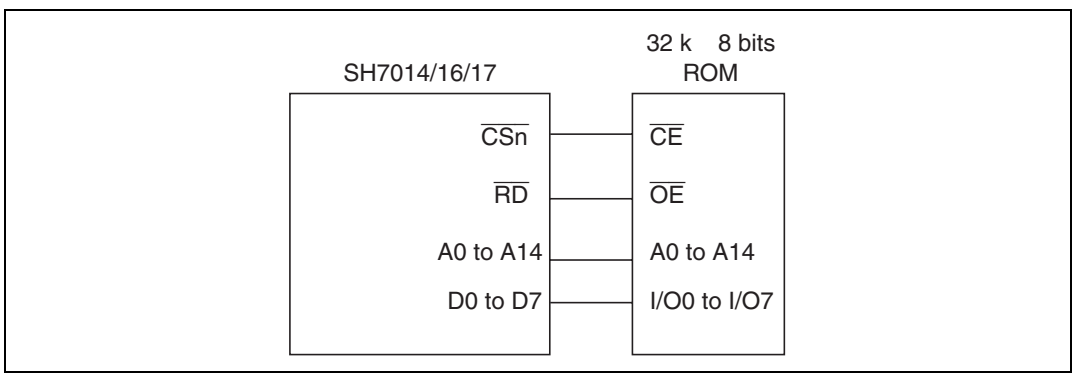

Figure 8.22 8-Bit Data Bus Width ROM Connection

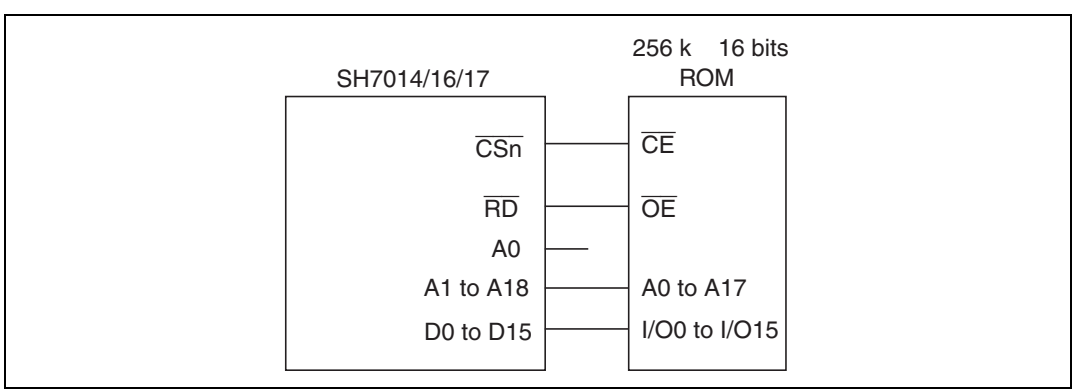

Figure 8.23 16-Bit Data Bus Width ROM Connection

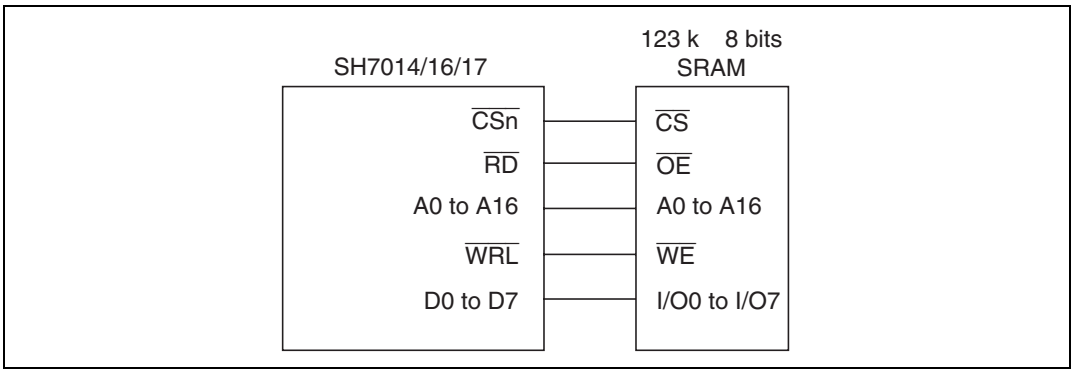

Figure 8.24 8-Bit Data Bus Width SRAM Connection

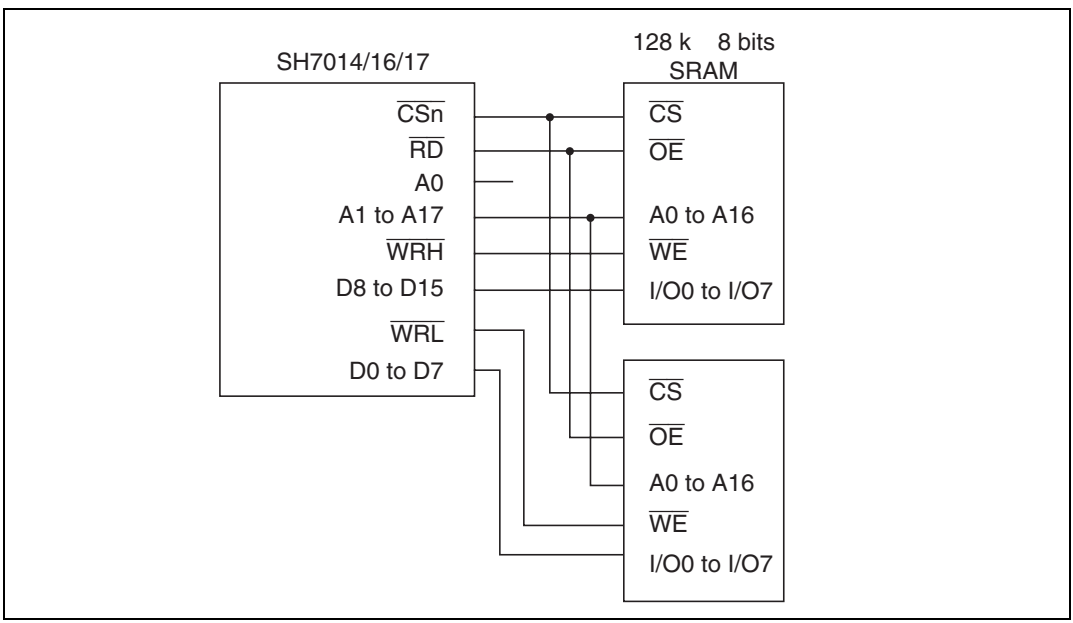

Figure 8.25 16-Bit Data Bus Width SRAM Connection

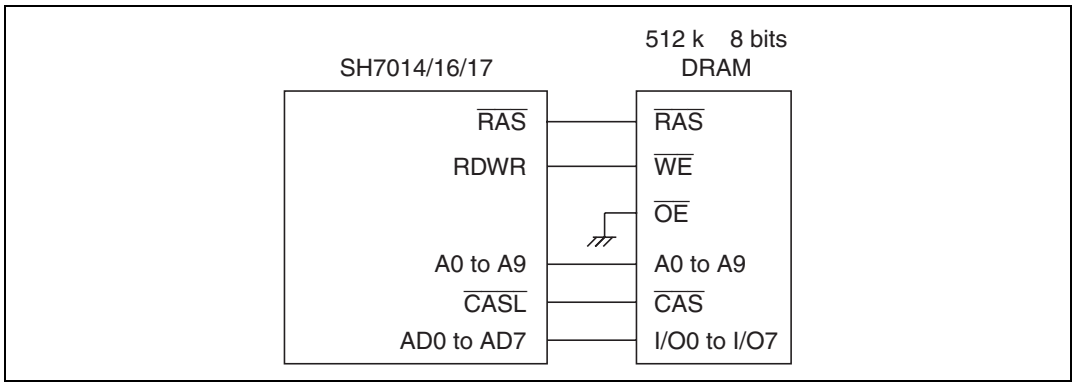

Figure 8.26 8-Bit Data Bus Width DRAM Connection

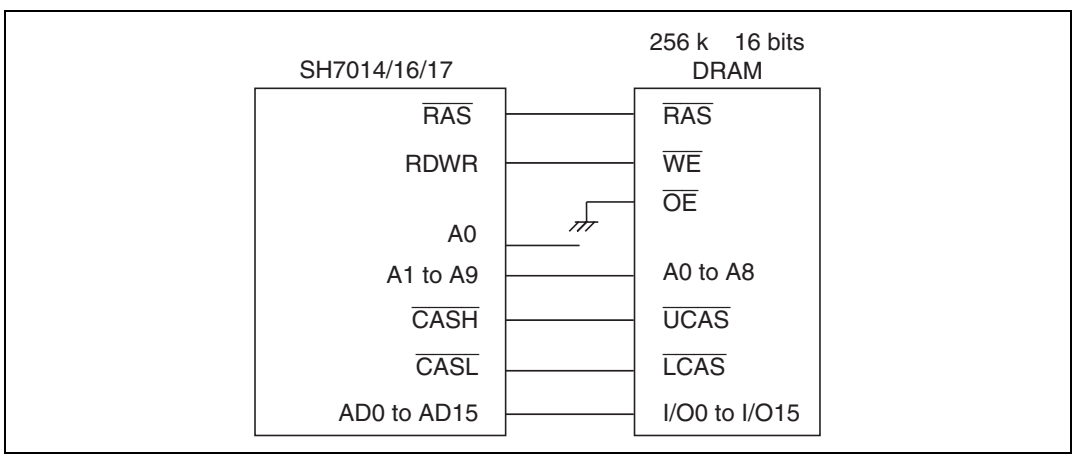

Figure 8.27 16-Bit Data Bus Width DRAM Connection

8.9 On-chip Peripheral I/O Register Access

On-chip peripheral I/O registers are accessed from the bus state controller, as shown in Table 8.5.

Table 8.5 On-chip Peripheral I/O Register Access

On-chip Peripheral Module	SCI	MTU	INTC	PFC, PORT	CMT	A/D*	WDT	DMAC	CACHE
Connected bus width	8bit	16bit	16bit	16bit	16bit	16bit	16bit	16bit	16bit
Access cycle	2cyc	2cyc	2cyc	2cyc	2cyc	2cyc	3cyc	3cyc	3cyc

Note: * The A/D in the SH7016 and SH7017 has an 8-bit width and is accessed in 3 cyc.

8.10 CPU Operation when Program Is in External Memory

In the SH7014, SH7016, and SH7017 F-ZTAT™, two words (equivalent to two instructions) are normally fetched in a single instruction fetch. This is also true when the program is located in external memory, irrespective of whether the external memory bus width is 8 or 16 bits.

If the program counter value immediately after the program branches is an odd-word (2n + 1) address, or if the program counter value immediately before the program branches is an even-word (2n) address, the CPU will always fetch 32 bits (equivalent to two instructions) that include the respective word instruction.

Section 9 Direct Memory Access Controller (DMAC)

9.1 Overview

The SH7014 includes an on-chip two-channel direct memory access controller (DMAC). The DMAC can be used in place of the CPU to perform high-speed data transfers among external devices equipped with DACK (transfer request acknowledge signal), external memories, memory-mapped external devices, and on-chip peripheral modules (except for the DMAC and BSC). Using the DMAC reduces the burden on the CPU and increases operating efficiency of the LSI as a whole.

9.1.1 Features

The DMAC has the following features:

- Two channels
- Four Gbytes of address space in the architecture
- Byte, word, or longword selectable data transfer unit
- 64 k (65,536) transfers
- Single or dual address mode.
  - — Single address mode: Either the transfer source or transfer destination (peripheral device) is accessed by a DACK signal while the other is accessed by address. One transfer unit of data is transferred in each bus cycle.
  - — Dual address mode: Both the transfer source and transfer destination are accessed by address. Values set in a DMAC internal register indicate the accessed address for both the transfer source and transfer destination. Two bus cycles are required for one data transfer.
- Channel function: Dual address mode and single address mode external requests can be accepted.
- Transfer requests: There are three DMAC transfer activation requests, as indicated below.
  - — External request: From two $\overline{\text{DREQ}}$ pins. DREQ can be detected either by falling edge or by low level. These can be received by all channels.
  - — Requests from on-chip peripheral modules: Transfer requests from on-chip modules such as SCI or A/D. These can be received by all channels.
  - — Auto-request: The transfer request is generated automatically within the DMAC.
- Selectable bus modes: Cycle-steal mode or burst mode
- The DMAC priority order is fixed at 0 > 1.

9.1.2 Block Diagram

Figure 9.1 is a block diagram of the DMAC.

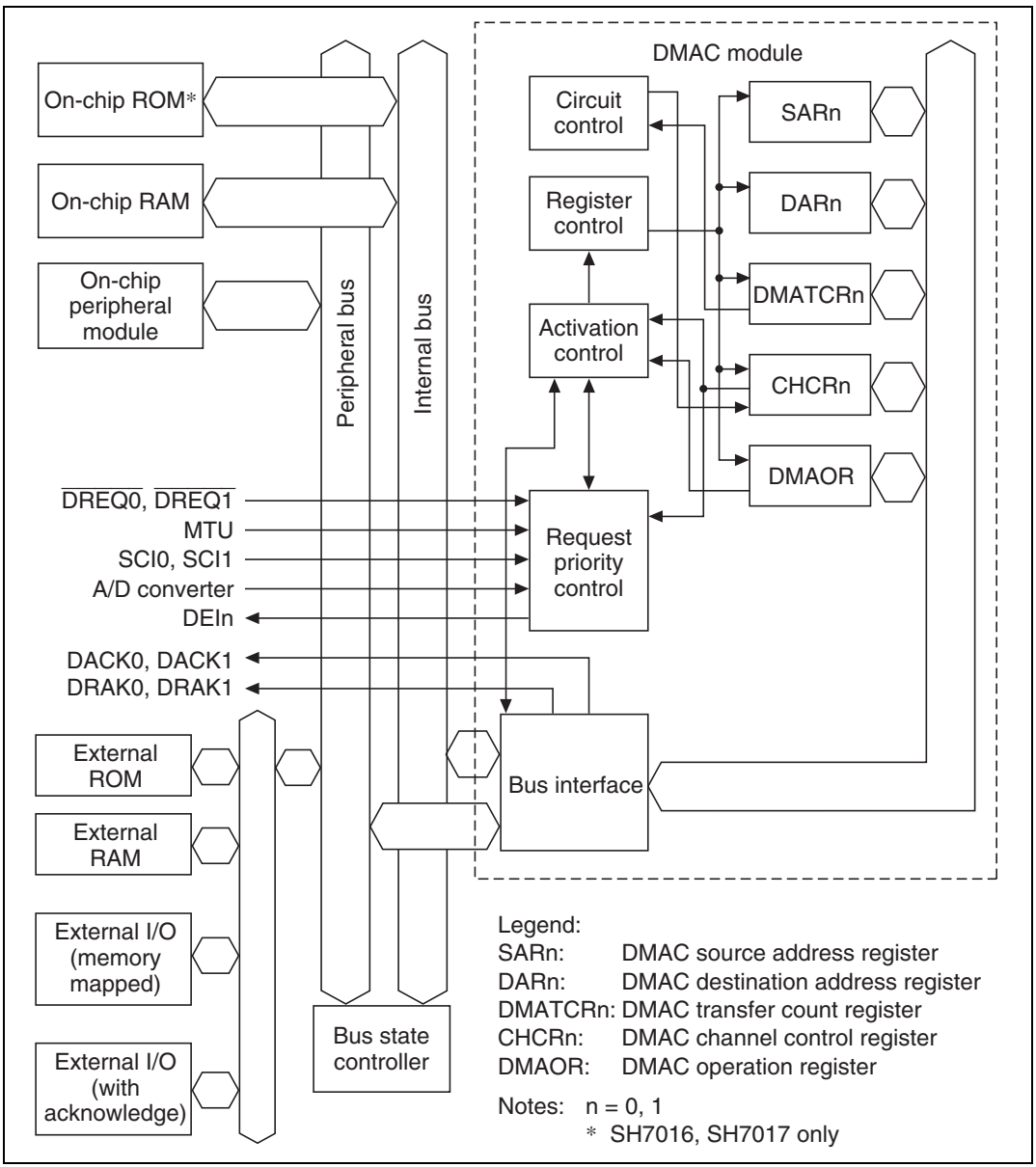

Figure 9.1 DMAC Block Diagram

9.1.3 Pin Configuration

Table 9.1 shows the DMAC pins.

Table 9.1 DMAC Pin Configuration

Channel	Name	Symbol	I/O	Function
0	DMA transfer request	$\overline{\text{DREQ0}}$	I	DMA transfer request input from external device to channel 0
	DMA transfer request acknowledge	DACK0	O	DMA transfer strobe output from channel 0 to external device
	$\overline{\text{DREQ0}}$ acceptance confirmation	DRAK0	O	Sampling receive acknowledge output for DMA transfer request input from external source
1	DMA transfer request	$\overline{\text{DREQ1}}$	I	DMA transfer request input from external device to channel 1
	DMA transfer request acknowledge	DACK1	O	DMA transfer strobe output from channel 1 to external device
	$\overline{\text{DREQ1}}$ acceptance confirmation	DRAK1	O	Sampling receive acknowledge output for DMA transfer request input from external source

9.1.4 Register Configuration

Table 9.2 summarizes the DMAC registers. DMAC has a total of 9 registers. Each channel has four control registers. One other control register is shared by all channels.

Table 9.2 DMAC Registers

Channel	Name	Abbreviation	R/W	Initial Value	Address	Register Size	Access Size
0	DMA source address register 0	SAR0	R/W	Undefined	H'FFFF86C0	32 bit	16, 32*[2]
	DMA destination address register 0	DAR0	R/W	Undefined	H'FFFF86C4	32 bit	16, 32*[2]
	DMA transfer count register 0	DMATCR0	R/W	Undefined	H'FFFF86C8	32 bit	16, 32*[3]
	DMA channel control register 0	CHCR0	R/W*[1]	H'00000000	H'FFFF86CC	32 bit	16, 32*[2]
1	DMA source address register 1	SAR1	R/W	Undefined	H'FFFF86D0	32 bit	16, 32*[2]
	DMA destination address register 1	DAR1	R/W	Undefined	H'FFFF86D4	32 bit	16, 32*[2]
	DMA transfer count register 1	DMATCR1	R/W	Undefined	H'FFFF86D8	32 bit	16, 32*[3]
	DMA channel control register 1	CHCR1	R/W*[1]	H'00000000	H'FFFF86DC	32 bit	16, 32*[2]
Shared	DMA operation register	DMAOR	R/W*[1]	H'0000	H'FFFF86B0	16 bit	16*[4]

Notes:
1. Write 0 after reading 1 in bit 1 of CHCR0, CHCR1 and in bits 1 and 2 of the DMAOR to clear flags. No other writes are allowed.
2. For 16-bit access of SAR0, SAR1, DAR0, DAR1, and CHCR0, CHCR1, the 16-bit value on the side not accessed is held.
3. DMATCR has a 16-bit configuration: bits 0 to 15. Writing to the upper 16 bits (bits 16 to 31) is invalid, and these bits always read 0.
4. Only 16-bit access for DMAOR.
5. Do not attempt to access an empty address. If an access is attemped, the system operation is not guarenteed.

9.2 Register Descriptions

9.2.1 DMA Source Address Registers 0, 1 (SAR0, SAR1)

DMA source address registers 0, 1 (SAR0, SAR1) are 32-bit read/write registers that specify the source address of a DMA transfer. These registers have a count function, and during a DMA transfer, they indicate the next source address. In single-address mode, SAR values are ignored when a device with DACK has been specified as the transfer source.

Specify a 16-bit or 32-bit boundary address when doing 16-bit or 32-bit data transfers. Operation cannot be guaranteed on any other addresses.

The initial value after power-on resets or in software standby mode is undefined.

Bit:	31	30	29	28	27	26	25	24
Initial value:	—	—	—	—	—	—	—	—
R/W:	R/W	R/W	R/W	R/W	R/W	R/W	R/W	R/W

Bit:	23	22	21	…	…	2	1	0
				…	…			
Initial value:	—	—	—	…	…	—	—	—
R/W:	R/W	R/W	R/W	…	…	R/W	R/W	R/W

9.2.2 DMA Destination Address Registers 0, 1 (DAR0, DAR1)

DMA destination address registers 0, 1 (DAR0, DAR1) are 32-bit read/write registers that specify the destination address of a DMA transfer. These registers have a count function, and during a DMA transfer, they indicate the next destination address. In single-address mode, DAR values are ignored when a device with DACK has been specified as the transfer destination.

Specify a 16-bit or 32-bit boundary address when doing 16-bit or 32-bit data transfers. Operation cannot be guaranteed on any other address. The initial value after power-on resets or in software standby mode, is undefined.

Bit:	31	30	29	28	27	26	25	24
Initial value:	—	—	—	—	—	—	—	—
R/W:	R/W	R/W	R/W	R/W	R/W	R/W	R/W	R/W

Bit:	23	22	21	…	…	2	1	0
				…	…			
Initial value:	—	—	—	…	…	—	—	—
R/W:	R/W	R/W	R/W	…	…	R/W	R/W	R/W

9.2.3 DMA Transfer Count Registers 0, 1 (DMATCR0, DMATCR1)

DMA transfer count registers 0, 1 (DMATCR0, DMATCR1) are 16-bit read/write registers that specify the transfer count for the channel (byte count, word count, or longword count). Specifying a H'000001 gives a transfer count of 1, while H'000000 gives the maximum setting, 65,536 transfers. While DMAC is in operation, the number of transfers to be performed is indicated. The initial value after power-on resets or in software standby mode is undefined.

Upper sixteen bits of this register are read as 0 and the write value should always be 0.

Bit:	31	30	29	28	27	26	25	24
	—	—	—	—	—	—	—	—
Initial value:	0	0	0	0	0	0	0	0
R/W:	R	R	R	R	R	R	R	R

Bit:	23	22	21	20	19	18	17	16
	—	—	—	—	—	—	—	—
Initial value:	—	—	—	—	—	—	—	—
R/W:	R	R	R	R	R	R	R	R

Bit:	15	14	13	12	11	10	9	8
Initial value:	—	—	—	—	—	—	—	—
R/W:	R/W	R/W	R/W	R/W	R/W	R/W	R/W	R/W

Bit:	7	6	5	4	3	2	1	0
Initial value:	—	—	—	—	—	—	—	—
R/W:	R/W	R/W	R/W	R/W	R/W	R/W	R/W	R/W

9.2.4 DMA Channel Control Registers 0, 1 (CHCR0, CHCR1)

DMA channel control registers 0, 1 (CHCR0, CHCR1) is a 32-bit read/write register where the operation and transmission of each channel is designated. Bits 31 to 19 and bit 7 should always read 0. The written value should also be 0. They are initialized to 0 by a power-on reset and in software standby mode.

Bit:	31	30	29	28	27	26	25	24
	—	—	—	—	—	—	—	—
Initial value:	0	0	0	0	0	0	0	0
R/W:	R	R	R	R	R	R	R	R

Bit:	23	22	21	20	19	18	17	16
	—	—	—	—	—	RL	AM	AL
Initial value:	0	0	0	0	0	0	0	0
	R	R	R	R	R	R/W	R/W	R/W

Bit:	15	14	13	12	11	10	9	8
	DM1	DM0	SM1	SM0	RS3	RS2	RS1	RS0
Initial value:	0	0	0	0	0	0	0	0
R/W:	R/W	R/W	R/W	R/W	R/W	R/W	R/W	R/W

Bit:	7	6	5	4	3	2	1	0
	—	DS	TM	TS1	TS0	IE	TE	DE
Initial value:	0	0	0	0	0	0	0	0
R/W:	R	R/W	R/W	R/W	R/W	R/W	R/(W)*	R/W

Note: * TE bit: Allows only 0 write after reading 1.

Bit 18—Request Check Level (RL): Selects whether to output DRAK notifying external device of $\overline{\text{DREQ}}$ received, with active high or active low.

Bit 18 RL	Description	
0	Output DRAK with active high	(initial value)
1	Output DRAK with active low	

Bit 17—Acknowledge Mode (AM): In dual address mode, selects whether to output DACK in the data write cycle or data read cycle. In single address mode, DACK is always output irrespective of the setting of this bit.

Bit 17 AM	Description	
0	Outputs DACK during read cycle	(initial value)
1	Outputs DACK during write cycle	

Bit 16—Acknowledge Level (AL): Specifies whether to set DACK (acknowledge) signal output to active high or active low.

Bit 16 AL	Description	
0	Active high output	(initial value)
1	Active low output	

Bits 15 and 14—Destination Address Mode 1, 0 (DM1 and DM0): These bits specify increment/decrement of the DMA transfer destination address. These bit specifications are ignored when transferring data from an external device to address space in single address mode.

Bit 15 DM1	Bit 14 DM0	Description	
0	0	Destination address fixed	(initial value)
	1	Destination address incremented (+1 during 8-bit transfer, +2 during 16-bit transfer, +4 during 32-bit transfer)	
1	0	Destination address decremented (–1 during 8-bit transfer, –2 during 16-bit transfer, –4 during 32-bit transfer)	
	1	Setting prohibited	

Bits 13 and 12—Source Address Mode 1, 0 (SM1 and SM0): These bits specify increment/decrement of the DMA transfer source address. These bit specifications are ignored when transferring data from an external device to address space in single address mode.

Bit 13 SM1	Bit 12 SM0	Description
0	0	Source address fixed (initial value)
	1	Source address incremented (+1 during 8-bit transfer, +2 during 16-bit transfer, +4 during 32-bit transfer)
1	0	Source address decremented (–1 during 8-bit transfer, –2 during 16-bit transfer, –4 during 32-bit transfer)
	1	Setting prohibited

Bits 11 to 8—Resource Select 3 to 0 (RS3 to RS0): These bits specify the transfer request source.

Bit 11 RS3	Bit 10 RS2	Bit 9 RS1	Bit 8 RS0	Description
0	0	0	0	External request, dual address mode (initial value)
			1	Prohibited
		1	0	External request, single address mode. External address space → external device.
			1	External request, single address mode. External device → external address space.
	1	0	0	Auto-request
			1	Prohibited
		1	0	MTU TGI0A
			1	MTU TGI1A
1	0	0	0	MTU TGI2A
			1	Prohibited
		1	0	Prohibited
			1	A/D ADI
	1	0	0	SCI0 TXI0
			1	SCI0 RXI0
		1	0	SCI1 TXI1
			1	SCI1 RXI1

Bit 6—$\overline{\text{DREQ}}$ Select (DS): Sets the sampling method for the $\overline{\text{DREQ}}$ pin in external request mode to either low-level detection or falling-edge detection. When specifying an on-chip peripheral module or auto-request as the transfer request source, this bit setting is ignored. The sampling method is fixed at falling-edge detection in cases other than auto-request.

Bit 6 DS	Description	
0	Low-level detection	(initial value)
1	Falling-edge detection	

Bit 5—Transfer Mode (TM): Specifies the bus mode for data transfer.

Bit 5 TM	Description	
0	Cycle steal mode	(initial value)
1	Burst mode	

Bits 4 and 3—Transfer Size 1, 0 (TS1, TS0): Specifies size of data for transfer.

Bit 4 TS1	Bit 3 TS0	Description	
0	0	Specifies byte size (8 bits)	(initial value)
	1	Specifies word size (16 bits)	
1	0	Specifies longword size (32 bits)	
	1	Prohibited	

Bit 2—Interrupt Enable (IE): When this bit is set to 1, interrupt requests are generated after the number of data transfers specified in the DMATCR (when TE = 1).

Bit 2 IE	Description
0	Interrupt request not generated after DMATCR-specified transfer count (initial value)
1	Interrupt request enabled on completion of DMATCR specified number of transfers

Bit 1—Transfer End Flag (TE): This bit is set to 1 after the number of data transfers specified by the DMATCR. At this time, if the IE bit is set to 1, an interrupt request is generated.

If data transfer ends before TE is set to 1 (for example, due to an NMI or address error, or clearing of the DE bit or DME bit of the DMAOR) the TE is not set to 1. With this bit set to 1, data transfer is disabled even if the DE bit is set to 1.

Bit 1 TE	Description	
0	DMATCR-specified transfer count not ended Clear condition: 0 write after TE = 1 read, Power-on reset, standby mode	(initial value)
1	DMATCR specified number of transfers completed	

Bit 0—DMAC Enable (DE): DE enables operation in the corresponding channel.

Bit 0 DE	Description	
0	Operation of the corresponding channel disabled	(initial value)
1	Operation of the corresponding channel enabled	

Transfer mode is entered if this bit is set to 1 when auto-request is specified (RS3 to RS0 settings). With an external request or on-chip module request, when a transfer request occurs after this bit is set to 1, transfer is enabled. If this bit is cleared during a data transfer, transfer is suspended.

If the DE bit has been set, but TE = 1, then if the DME bit of the DMAOR is 0, and the NMI or AE bit of the DMAOR is 1, transfer enable mode is not entered.

9.2.5 DMAC Operation Register (DMAOR)

The DMAOR is a 16-bit read/write register that specifies the transfer mode of the DMAC. Bits 15 to 3 of this register always read as 0. The write value should always be 0.

Register values are initialized to 0 during power-on reset or in software standby mode.

Bit:	15	14	13	12	11	10	9	8
	—	—	—	—	—	—	—	—
Initial value:	0	0	0	0	0	0	0	0
R/W:	R	R	R	R	R	R	R	R

Bit:	7	6	5	4	3	2	1	0
	—	—	—	—	—	AE	NMIF	DME
Initial value:	0	0	0	0	0	0	0	0
R/W:	R	R	R	R	R	R/(W)*	R/(W)*	R

Note: * 0 write only is valid after 1 is read.

Bit 2—Address Error Flag (AE): Indicates that an address error has occurred during DMA transfer. If this bit is set during a data transfer, transfers on all channels are suspended. The CPU cannot write a 1 to the AE bit. Clearing is effected by 0 write after 1 read.

Bit 2 AE	Description
0	No address error, DMA transfer enabled (initial value) Clearing condition: Write AE = 0 after reading AE = 1
1	Address error, DMA transfer disabled Setting condition: Address error due to DMAC

Bit 1—NMI Flag (NMIF): Indicates input of an NMI. This bit is set irrespective of whether the DMAC is operating or suspended. If this bit is set during a data transfer, transfers on all channels are suspended. The CPU is unable to write a 1 to the NMIF. Clearing is effected by a 0 write after 1 read.

Bit 1 NMIF	Description	
0	No NMI interrupt, DMA transfer enabled Clearing condition: Write NMIF = 0 after reading NMIF = 1	(initial value)
1	NMI has occurred, DMC transfer prohibited Set condition: NMI interrupt occurrence	

Bit 0—DMAC Master Enable (DME): This bit enables activation of the entire DMAC. When the DME bit and DE bit of the CHCR for the corresponding channel are set to 1, that channel is transfer-enabled. If this bit is cleared during a data transfer, transfers on all channels are suspended.

Even when the DME bit is set, when the TE bit of the CHCR is 1, or its DE bit is 0, transfer is disabled in the case of an NMI of the DMAOR or when AE = 1.

Bit 0 DME	Description	
0	Disable operation on all channels	(initial value)
1	Enable operation on all channels	

9.3 Operation

When there is a DMA transfer request, the DMAC starts the transfer according to the predetermined channel priority order; when the transfer end conditions are satisfied, it ends the transfer. Transfers can be requested in three modes: auto-request, external request, and on-chip peripheral module request. Transfer can be in either the single address mode or the dual address mode. The bus mode can be either burst or cycle steal.

9.3.1 DMA Transfer Flow

After the DMA source address registers (SAR), DMA destination address registers (DAR), DMA transfer count register (DMATCR), DMA channel control registers (CHCR), and DMA operation register (DMAOR) are set to the desired transfer conditions, the DMAC transfers data according to the following procedure:

1. The DMAC checks to see if transfer is enabled (DE = 1, DME = 1, TE = 0, NMIF = 0, AE = 0).
2. When a transfer request comes and transfer has been enabled, the DMAC transfers 1 transfer unit of data (determined by TS0 and TS1 setting). For an auto-request, the transfer begins automatically when the DE bit and DME bit are set to 1. The DMATCR value will be decremented by 1 upon each transfer. The actual transfer flows vary by address mode and bus mode.
3. When the specified number of transfers have been completed (when DMATCR reaches 0), the transfer ends normally. If the IE bit of the CHCR is set to 1 at this time, a DEI interrupt is sent to the CPU.
4. When an address error occurs in the DMAC or an NMI interrupt is generated, the transfer is aborted. Transfers are also aborted when the DE bit of the CHCR or the DME bit of the DMAOR are changed to 0.

Figure 9.2 is a flowchart of this procedure.

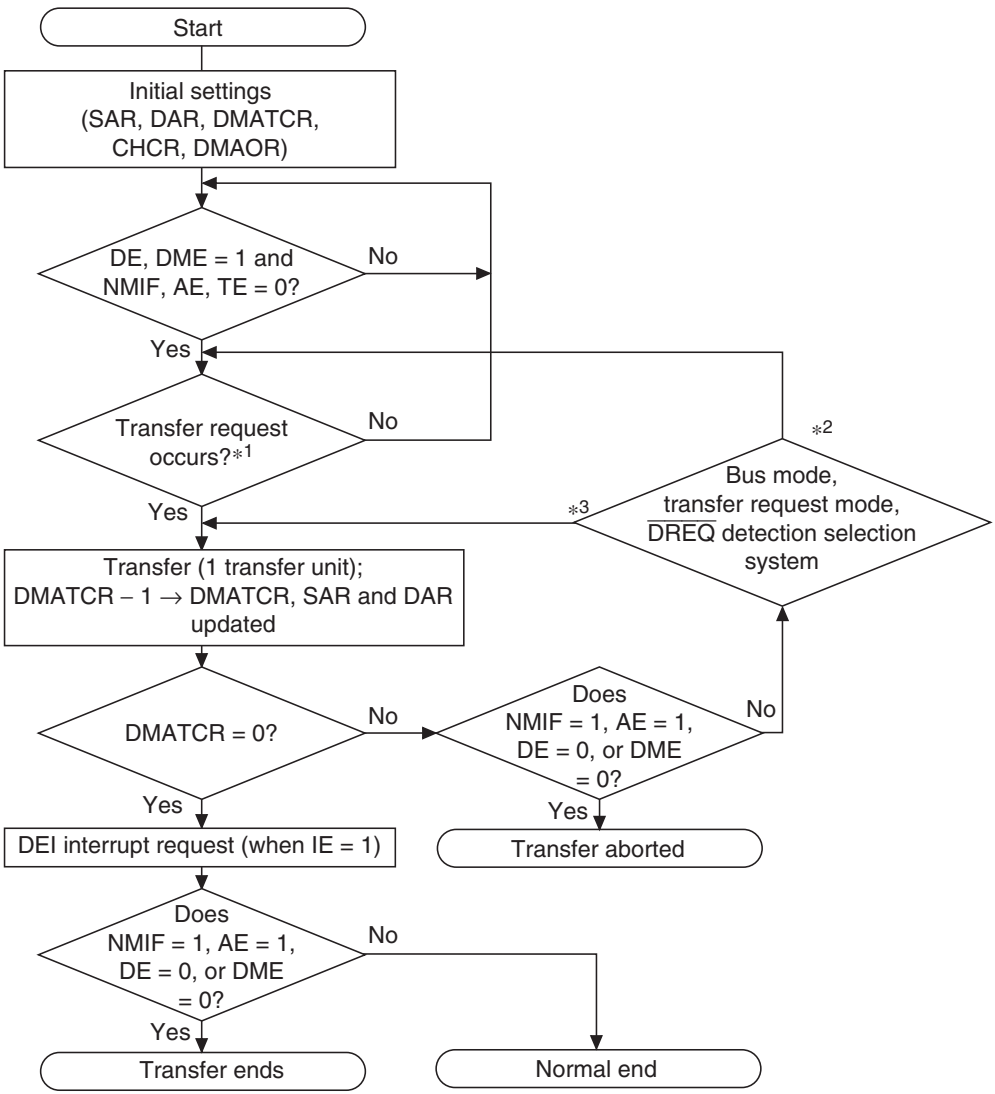

Notes: 1. In auto-request mode, transfer begins when NMIF, AE, and TE are all 0, and the DE and DME bits are set to 1.
2. $\overline{\text{DREQ}}$ level detection in burst mode (external request) or cycle-steal mode.
3. $\overline{\text{DREQ}}$ edge detection in burst mode (external request), or auto-request mode in burst mode.

Figure 9.2 DMAC Transfer Flowchart

9.3.2 DMA Transfer Requests

DMA transfer requests are usually generated in either the data transfer source or destination, but they can also be generated by devices and on-chip peripheral modules that are neither the source nor the destination. Transfers can be requested in three modes: auto-request, external request, and on-chip peripheral module request. The request mode is selected in the RS3 to RS0 bits of the DMA channel control registers 0, 1 (CHCR0, CHCR1).

Auto-Request Mode: When there is no transfer request signal from an external source, as in a memory-to-memory transfer or a transfer between memory and an on-chip peripheral module unable to request a transfer, the auto-request mode allows the DMAC to automatically generate a transfer request signal internally. When the DE bits of CHCR0, CHCR1 and the DME bit of the DMAOR are set to 1, the transfer begins (so long as the TE bits of CHCR0, CHCR1 and the NMIF and AE bits of DMAOR are all 0).

External Request Mode: In this mode a transfer is performed at the request signal ($\overline{\text{DREQ}}$) of an external device. Choose one of the modes shown in table 9.3 according to the application system. When this mode is selected, if the DMA transfer is enabled (DE = 1, DME = 1, TE = 0, NMIF = 0, AE = 0), a transfer is performed upon a request at the $\overline{\text{DREQ}}$ input. Choose to detect $\overline{\text{DREQ}}$ by either the falling edge or low level of the signal input with the DS bit of CHCR0, CHCR1 (DS = 0 is level detection, DS = 1 is edge detection). The source of the transfer request does not have to be the data transfer source or destination.

Table 9.3 Selecting External Request Modes with the RS Bits

RS3	RS2	RS1	RS0	Address Mode	Source	Destination
0	0	0	0	Dual address mode	Any*	Any*
		1	0	Single address mode	External memory or memory-mapped external device	External device with DACK
			1	Single address mode	External device with DACK	External memory or memory-mapped external device

Note: * External memory, memory-mapped external device, on-chip memory, on-chip peripheral module (excluding DMAC, BSC).

On-Chip Peripheral Module Request Mode: In this mode a transfer is performed at the transfer request signal (interrupt request signal) of an on-chip peripheral module. As indicated in table 9.4, there are eight transfer request signals: three from the multifunction timer pulse unit (MTU), which are compare match or input capture interrupts; the receive data full interrupts (RxI) and transmit data empty interrupts (TxI) of the two serial communication interfaces (SCI); and the A/D conversion end interrupt (ADI) of the A/D converter. When DMA transfers are enabled (DE = 1, DME = 1, TE = 0, NMIF = 0, AE = 0), a transfer is performed upon the input of a transfer request signal.

The transfer request source need not be the data transfer source or transfer destination. However, when the transfer request is set by RxI (transfer request because SCI's receive data is full), the transfer source must be the SCI's receive data register (RDR). When the transfer request is set by TxI (transfer request because SCI's transmit data is empty), the transfer destination must be the SCI's transmit data register (TDR). Also, if the transfer request is set to the A/D converter, the data transfer destination must be the A/D converter register.

Table 9.4 Selecting On-Chip Peripheral Module Request Modes with the RS Bits

RS3	RS2	RS1	RS0	DMAC Transfer Request Source	DMA Transfer Request Signal	Source	Destin-ation	Bus Mode
0	1	1	0	MTU*[2]	TGI0A	Any*[1]	Any*[1]	Burst/cycle steal
			1	MTU*[2]	TGI1A	Any*[1]	Any*[1]	Burst/cycle steal
1	0	0	0	MTU*[2]	TGI2A	Any*[1]	Any*[1]	Burst/cycle steal
			1	Prohibited				
		1	0	Prohibited				
			1	A/D	ADI	ADDR*[4]	Any*[1]	Burst/cycle steal
	1	0	0	SCI0*[3] transmit block	TxI0	Any*[1]	TDR0	Burst/cycle steal
			1	SCI0*[3] receive block	RxI0	RDR0	Any*[1]	Burst/cycle steal
		1	0	SCI1*[3] transmit block	TxI1	Any*[1]	TDR1	Burst/cycle steal
			1	SCI1*[3] receive block	RxI1	RDR1	Any*[1]	Burst/cycle steal

Notes: 1. External memory, memory-mapped external device, on-chip memory, on-chip peripheral module (excluding DMAC, BSC).
2. MTU: Multifunction timer pulse unit.
3. SCI0, SCI1: Serial communications interface.
4. ADDR: A/D converter's A/D register.

In order to output a transfer request from an on-chip peripheral module, set the relevant interrupt enable bit for each module, and output an interrupt signal.

When an on-chip peripheral module's interrupt request signal is used as a DMA transfer request signal, interrupts for the CPU are not generated.

When a DMA transfer is conducted corresponding with one of the transfer request signals in table 9.4, it is automatically discontinued. In cycle steal mode this occurs in the first transfer, and in burst mode with the last transfer.

9.3.3 Channel Priority

When the DMAC receives simultaneous transfer requests on two or more channels, it selects a channel according to a predetermined priority order. The channel priority order is fixed at channel 0 > channel 1.

9.3.4 DMA Transfer Types

The DMAC supports the transfers shown in table 9.5. It can operate in the single address mode, in which either the transfer source or destination is accessed using an acknowledge signal, or dual address mode, in which both the transfer source and destination addresses are output. The DMAC has two bus modes: cycle-steal mode and burst mode.

Table 9.5 Supported DMA Transfers

	Destination				
Source	**External Device with DACK**	**External Memory**	**Memory-Mapped External Device**	**On-Chip Memory**	**On-Chip Peripheral Module**
External device with DACK	Not available	Single	Single	Not available	Not available
External memory	Single	Dual	Dual	Dual	Dual
Memory-mapped external device	Single	Dual	Dual	Dual	Dual
On-chip memory	Not available	Dual	Dual	Dual	Dual
On-chip peripheral module	Not available	Dual	Dual	Dual	Dual

Notes: 1. Single: Single address mode
2. Dual: Dual address mode

Address Modes

Single Address Mode: In the single address mode, both the transfer source and destination are external; one (selectable) is accessed by a DACK signal while the other is accessed by an address. In this mode, the DMAC performs the DMA transfer in 1 bus cycle by simultaneously outputting a transfer request acknowledge DACK signal to one external device to access it while outputting an address to the other end of the transfer. Figure 9.3 shows an example of a transfer between an external memory and an external device with DACK in which the external device outputs data to the data bus while that data is written in external memory in the same bus cycle.

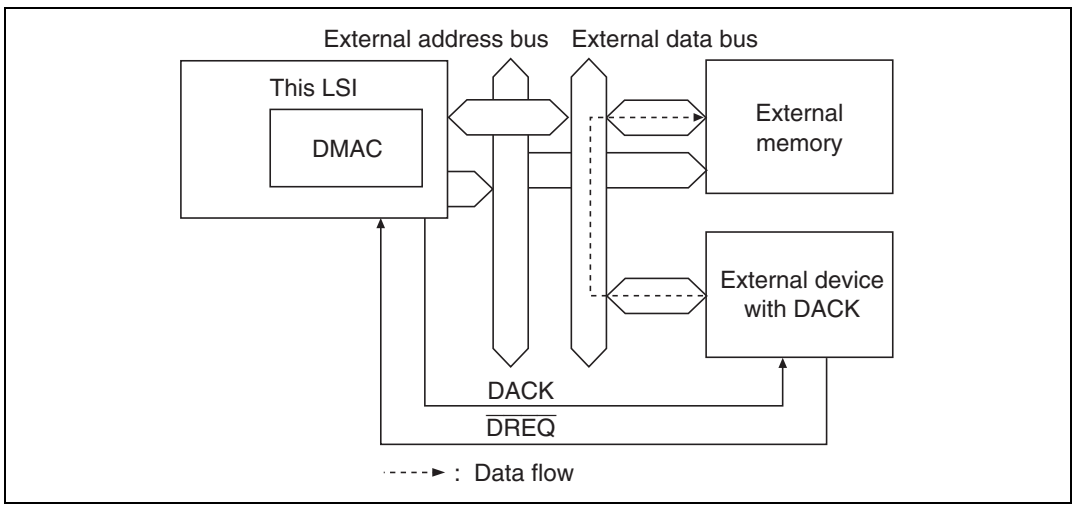

Figure 9.3 Data Flow in Single Address Mode

Two types of transfers are possible in the single address mode: (a) transfers between external devices with DACK and memory-mapped external devices, and (b) transfers between external devices with DACK and external memory. The only transfer requests for either of these is the external request ($\overline{\text{DREQ}}$). Figure 9.4 shows the DMA transfer timing for the single address mode.

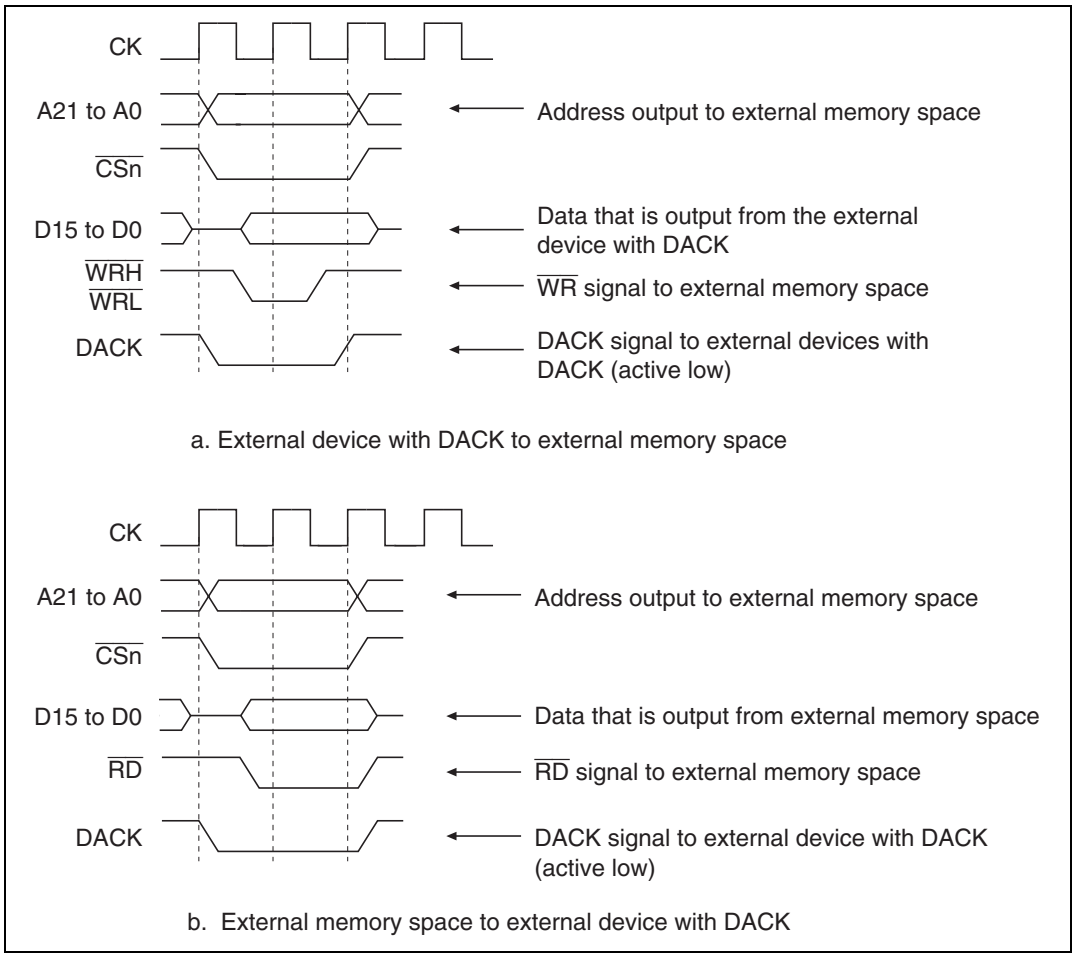

Figure 9.4 Example of DMA Transfer Timing in the Single Address Mode

Dual Address Mode: Dual address mode is used for access of both the transfer source and destination by address. Transfer source and destination can be accessed either internally or externally. In dual address mode, data is read from the transfer source during the data read cycle, and written to the transfer destination during the write cycle, so transfer is conducted in two bus cycles. At this time, the transfer data is temporarily stored in the DMAC. With the kind of external memory transfer shown in figure 9.5, data is read from one of the memories by the DMAC during a read cycle, then written to the other external memory during the subsequent write cycle. Figure 9.6 shows the timing for this operation.

1st bus cycle

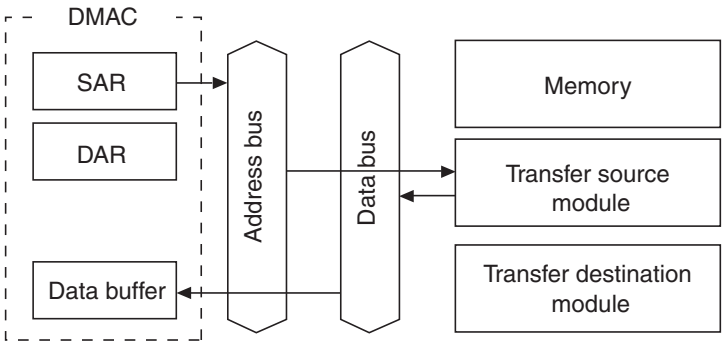

The SAR value is taken as the address, and data is read from the transfer source module and stored temporarily in the DMAC.

2nd bus cycle

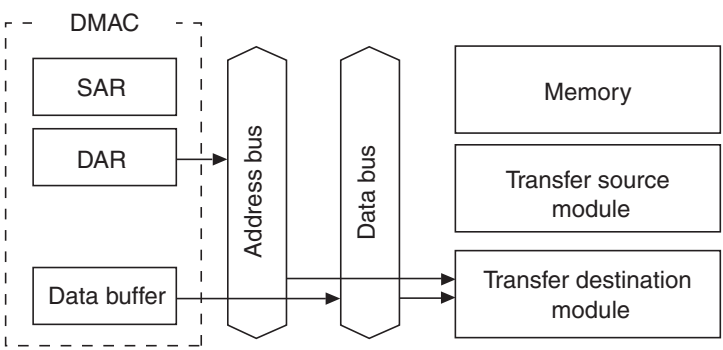

The DAR value is taken as the address, and data stored in the DMAC's data buffer is written to the transfer destination module.

Figure 9.5 Operation during Dual Address Mode

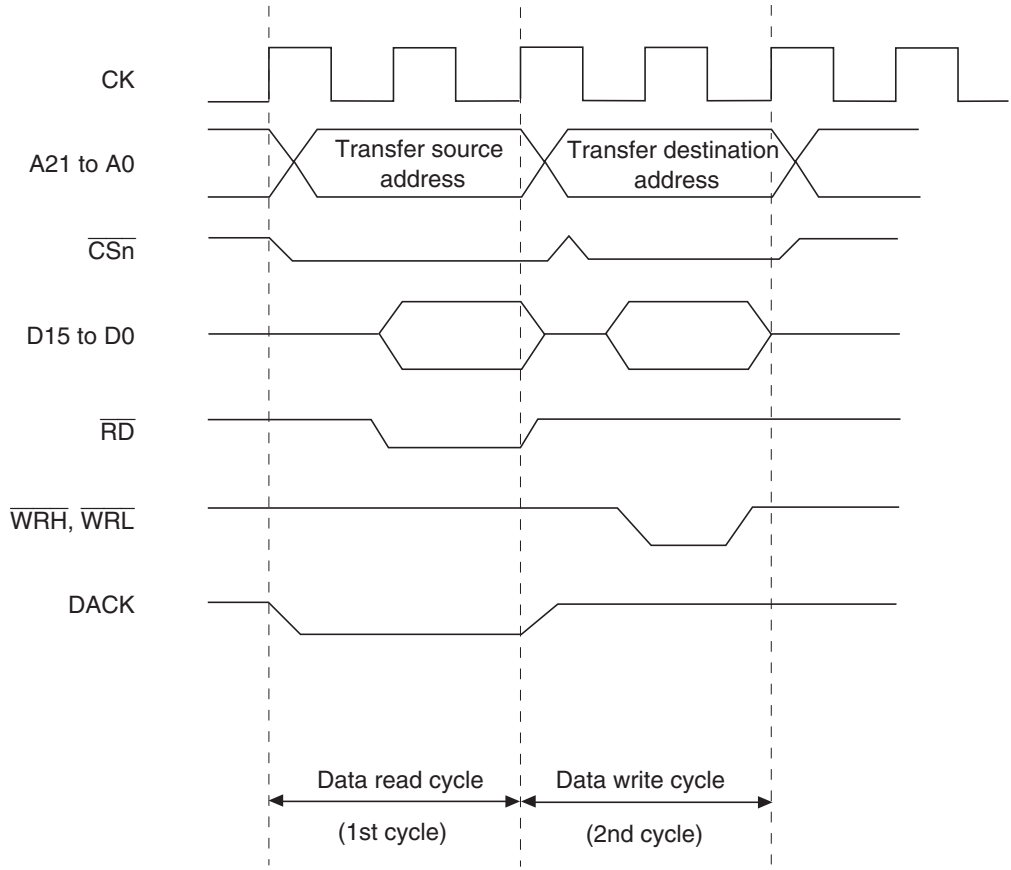

Note: Transfer between external memories with DACK are output during read cycle.

Figure 9.6 Example of Transfer Timing in Dual Address Mode

Bus Modes

Select the appropriate bus mode in the TM bits of CHCR0, CHCR1. There are two bus modes: cycle steal and burst.

Cycle-Steal Mode: In the cycle steal mode, the bus right is given to another bus master after each one-transfer-unit (byte, word, or longword) DMAC transfer. When the next transfer request occurs, the bus rights are obtained from the other bus master and a transfer is performed for one transfer unit. When that transfer ends, the bus right is passed to the other bus master. This is repeated until the transfer end conditions are satisfied.

The cycle steal mode can be used with all categories of transfer destination, transfer source and transfer request. Figure 9.7 shows an example of DMA transfer timing in the cycle steal mode. Transfer conditions are dual address mode and $\overline{\text{DREQ}}$ level detection.

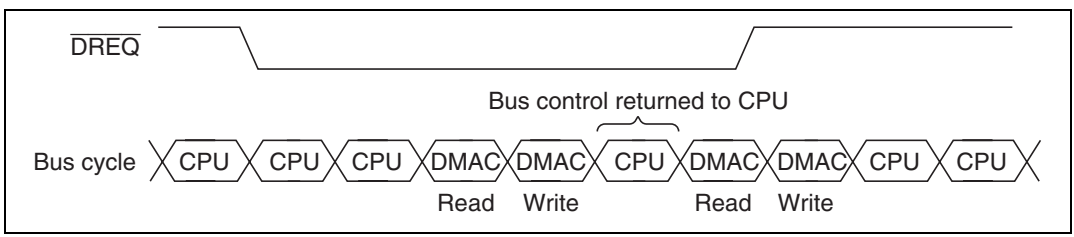

Figure 9.7 DMA Transfer Example in the Cycle-Steal Mode

Burst Mode: Once the bus right is obtained, the transfer is performed continuously until the transfer end condition is satisfied. In the external request mode with low level detection of the $\overline{\text{DREQ}}$ pin, however, when the $\overline{\text{DREQ}}$ pin is driven high, the bus passes to the other bus master after the bus cycle of the DMAC that currently has an acknowledged request ends, even if the transfer end conditions have not been satisfied.

Figure 9.8 shows an example of DMA transfer timing in the burst mode. Transfer conditions are single address mode and $\overline{\text{DREQ}}$ level detection.

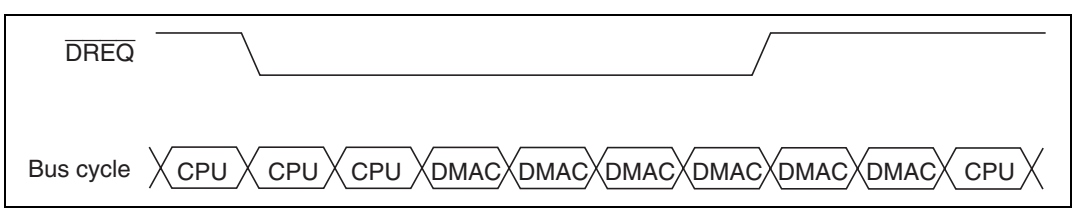

Figure 9.8 DMA Transfer Example in the Burst Mode

Relationship between Request Modes and Bus Modes by DMA Transfer Category

Table 9.6 shows the relationship between request modes and bus modes by DMA transfer category.

Table 9.6 Relationship of Request Modes and Bus Modes by DMA Transfer Category

Address Mode	Transfer Category	Request Mode	Bus Mode*5	Transfer Size (Bits)	Usable Channels
Single	External device with DACK and external memory	External	B/C	8/16/32	0,1
	External device with DACK and memory-mapped external device	External	B/C	8/16/32	0, 1
Dual	External memory and external memory	Any*1	B/C	8/16/32	0, 1
	External memory and memory-mapped external device	Any*1	B/C	8/16/32	0, 1
	Memory-mapped external device and memory-mapped external device	Any*1	B/C	8/16/32	0, 1
	External memory and on-chip memory	Any*1	B/C	8/16/32	0, 1
	External memory and on-chip peripheral module	Any*2	B/C*3	8/16/32*4	0, 1
	Memory-mapped external device and on-chip memory	Any*1	B/C	8/16/32	0, 1
	Memory-mapped external device and on-chip peripheral module	Any*2	B/C*3	8/16/32*4	0, 1
	On-chip memory and on-chip memory	Any*1	B/C	8/16/32	0, 1
	On-chip memory and on-chip peripheral module	Any*2	B/C*3	8/16/32*4	0, 1*1
	On-chip peripheral module and on-chip peripheral module	Any*2	B/C*3	8/16/32*4	0, 1

Notes:
1. External request, auto-request or on-chip peripheral module request enabled. However, in the case of on-chip peripheral module request, it is not possible to specify the SCI or A/D converter for the transfer request source.
2. External request, auto-request or on-chip peripheral module request possible. However, if transfer request source is also the SCI or A/D converter, the transfer source or transfer destination must be the SCI or A/D converter.
3. When the transfer request source is the SCI, only cycle steal mode is possible.
4. Access size permitted by register of on-chip peripheral module that is the transfer source or transfer destination.
5. B: Burst, C: Cycle steal

Bus Mode and Channel Priority Order

When a given channel is transferring in burst mode, and a transfer request is issued to channel 0, which has a higher priority ranking, transfer on channel 0 begins immediately. Channel 1 transfer is continued after transfer on channel 0 are completely ended, whether the channel 0 setting is cycle steal mode or burst mode.

9.3.5 Number of Bus Cycle States and DREQ Pin Sample Timing

Number of States in Bus Cycle: The number of states in the bus cycle when the DMAC is the bus master is controlled by the bus state controller (BSC) just as it is when the CPU is the bus master. For details, see section 8, Bus State Controller.

$\overline{\text{DREQ}}$ Pin Sampling Timing and DRAK Signal: In external request mode, the $\overline{\text{DREQ}}$ pin is sampled by either falling edge or low-level detection. When a $\overline{\text{DREQ}}$ input is detected, a DMAC bus cycle is issued and DMA transfer effected, at the earliest, after three states. However, in burst mode when single address operation is specified, a dummy cycle is inserted for the first bus cycle. In this case, the actual data transfer starts from the second bus cycle. Data is transferred continuously from the second bus cycle. The dummy cycle is not counted in the number of transfer cycles, so there is no need to recognize the dummy cycle when setting the DMATCR.

$\overline{\text{DREQ}}$ sampling from the second time begins from the start of the transfer one bus cycle prior to the DMAC transfer generated by the previous sampling.

DRAK is output once for the first $\overline{\text{DREQ}}$ sampling, irrespective of transfer mode or $\overline{\text{DREQ}}$ detection method. In burst mode, using edge detection, $\overline{\text{DREQ}}$ is sampled for the first cycle only, so DRAK is also output for the first cycle only. Therefore, the $\overline{\text{DREQ}}$ signal negate timing can be ascertained, and this facilitates handshake operations of transfer requests with the DMAC.

Cycle Steal Mode Operations: In cycle steal mode, $\overline{\text{DREQ}}$ sampling timing is the same irrespective of dual or single address mode, or whether edge or low-level $\overline{\text{DREQ}}$ detection is used.

For example, DMAC transfer begins (figure 9.9), at the earliest, three cycles from the first sampling timing. The second sampling begins at the start of the transfer one bus cycle prior to the start of the DMAC transfer initiated by the first sampling (i.e., from the start of the CPU(3) transfer). At this point, if $\overline{\text{DREQ}}$ detection has not occurred, sampling is executed every cycle thereafter.

As in figure 9.10, whatever cycle the CPU transfer cycle is, the next sampling begins from the start of the transfer one bus cycle before the DMAC transfer begins.

Figure 9.9 shows an example of output during DACK read and figure 9.10 an example of output during DACK write.

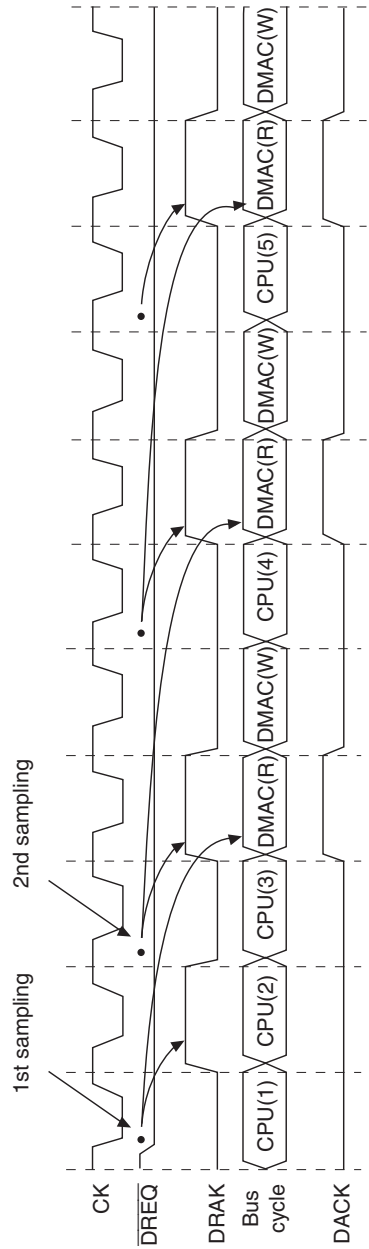

Figure 9.9 Cycle Steal, Dual Address and Level Detection (Fastest Operation)

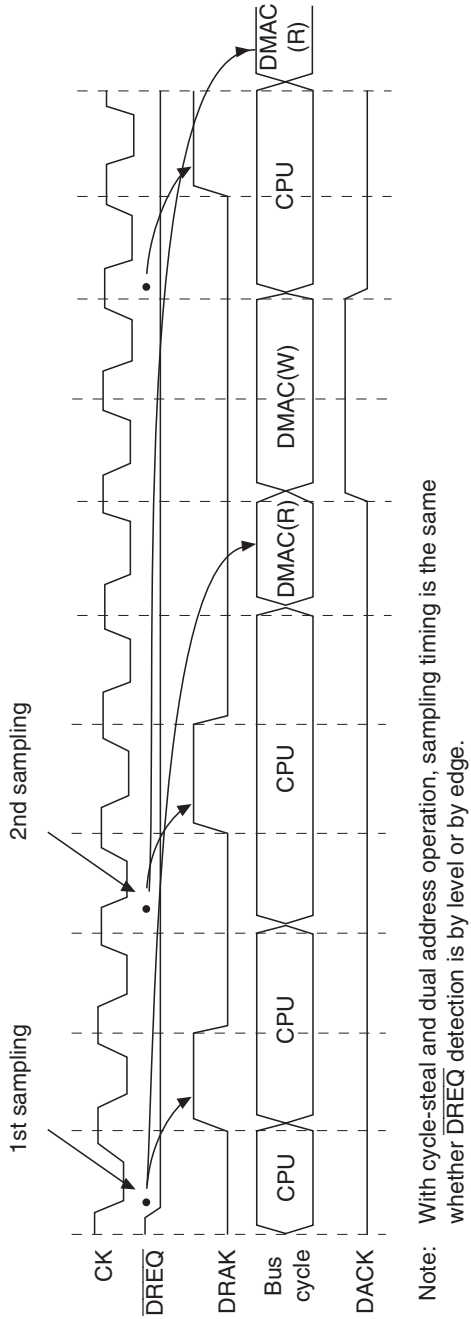

Figure 9.10 Cycle Steal, Dual Address and Level Detection (Normal Operation)

Figures 9.11 and 9.12 show cycle steal mode and single address mode. In this case, transfer begins at earliest three cycles after the first $\overline{\text{DREQ}}$ sampling. The second sampling begins from the start of the transfer one bus cycle before the start of the first DMAC transfer. In single address mode, the DACK signal is output during the DMAC transfer period.

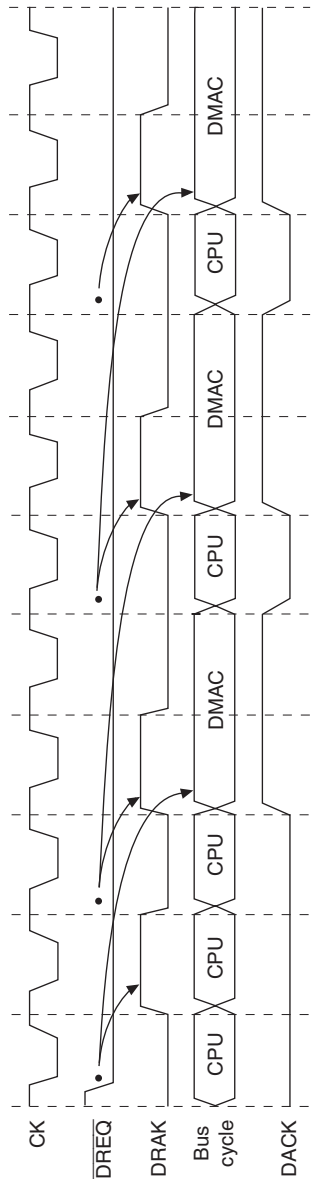

Figure 9.11 Cycle Steal, Single Address and Level Detection (Fastest Operation)

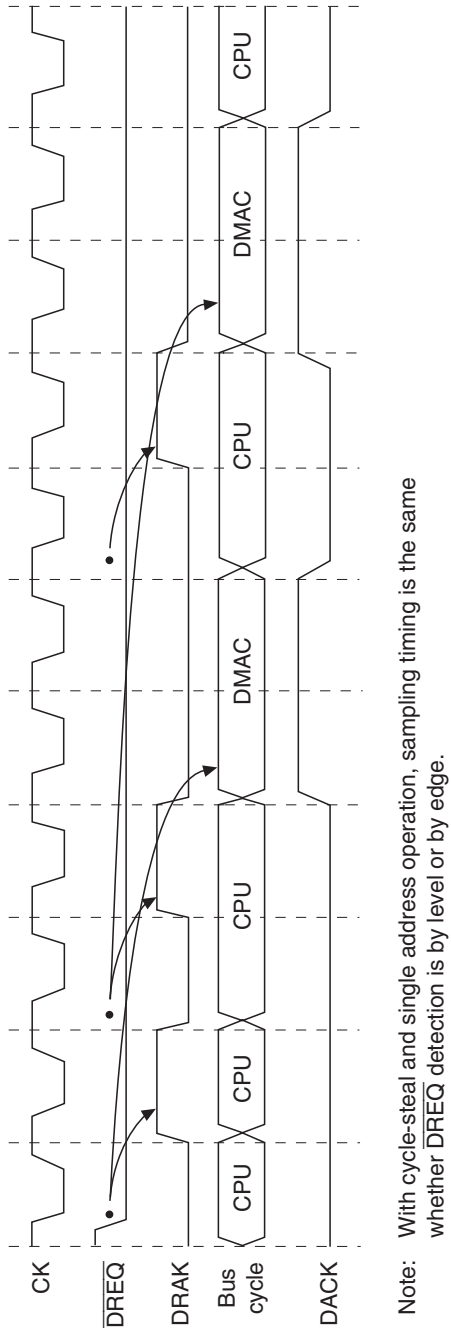

Note: With cycle-steal and single address operation, sampling timing is the same whether $\overline{\text{DREQ}}$ detection is by level or by edge.

Figure 9.12 Cycle Steal, Single Address and Level Detection (Normal Operation)

Burst Mode, Dual Address, and Level Detection: $\overline{\text{DREQ}}$ sampling timing in burst mode with dual address and level detection is shown in figures 9.13 and 9.14. $\overline{\text{DREQ}}$ sampling timing in burst mode with dual address and level detection is virtually the same as that of cycle steal mode.

For example, DMAC transfer begins (figure 9.13), at the earliest, three cycles after the timing of the first sampling. The second sampling also begins from the start of the transfer one bus cycle before the start of the first DMAC transfer. In burst mode, as long as transfer requests are issued, DMAC transfer continues. Therefore, the “transfer one bus cycle before the start of the DMAC transfer” may be a DMAC transfer.

In burst mode, the DACK output period is the same as that of cycle steal mode. Figure 9.14 shows the normal operation of this burst mode.

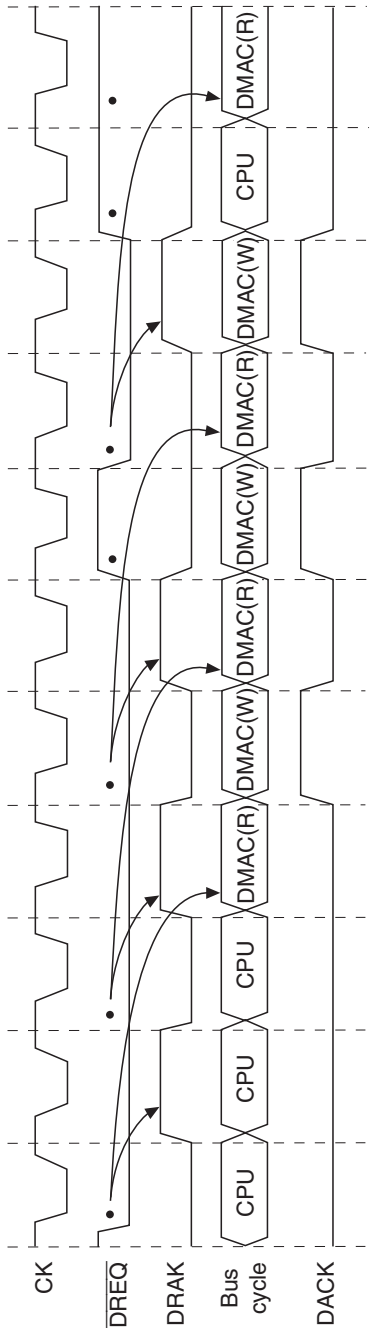

Figure 9.13 Burst Mode, Dual Address and Level Detection (Fastest Operation)

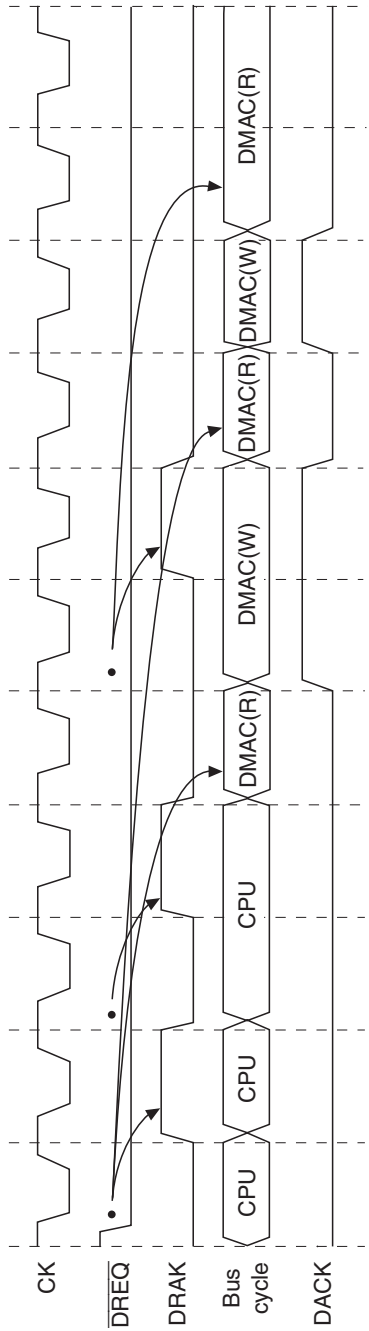

Figure 9.14 Burst Mode, Dual Address and Level Detection (Normal Operation)

Burst Mode, Single Address, and Level Detection: $\overline{\text{DREQ}}$ sampling timing in burst mode with single address and level detection is shown in figures 9.15 and 9.16.

In burst mode with single address and level detection, a dummy cycle is inserted as one bus cycle, at the earliest, three cycles after timing of the first sampling. Data during this period is undefined, and the DACK signal is not output. Nor is the number of DMAC transfers counted. The actual DMAC transfer begins after one dummy bus cycle output.

The dummy cycle is not counted either at the start of the second sampling (transfer one bus cycle before the start of the first DMAC transfer). Therefore, the second sampling is not conducted from the bus cycle starting the dummy cycle, but from the start of the CPU(3) bus cycle.

Thereafter, as long the $\overline{\text{DREQ}}$ is continuously sampled, no dummy cycle is inserted. $\overline{\text{DREQ}}$ sampling timing during this period begins from the start of the transfer one bus cycle before the start of DMAC transfer, in the same way as with cycle steal mode.

As with the fourth sampling in figure 9.15, once DMAC transfer is interrupted, a dummy cycle is again inserted at the start as soon as DMAC transfer is resumed.

The DACK output period in burst mode is the same as in cycle steal mode.

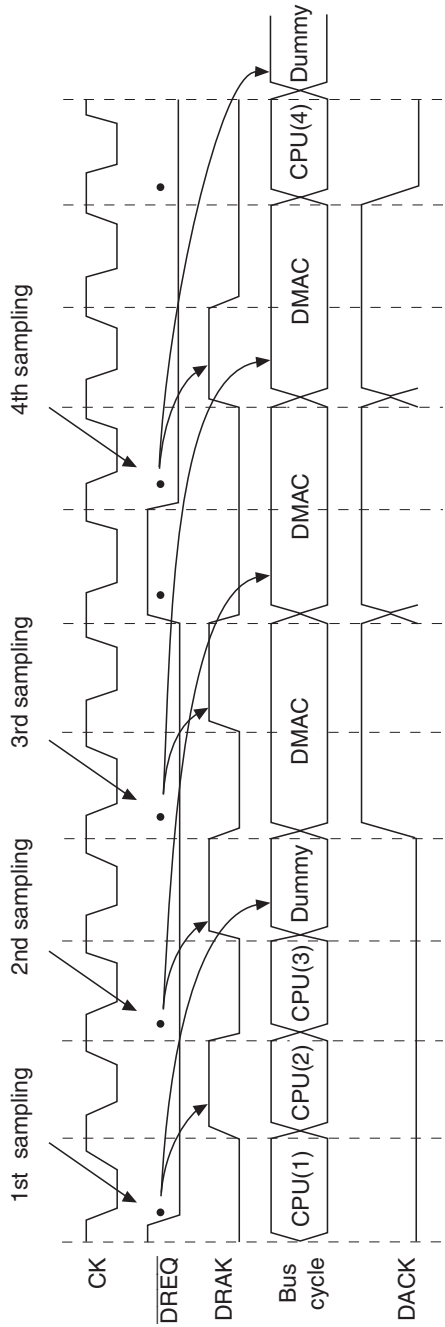

Figure 9.15 Burst Mode, Single Address and Level Detection (Fastest Operation)

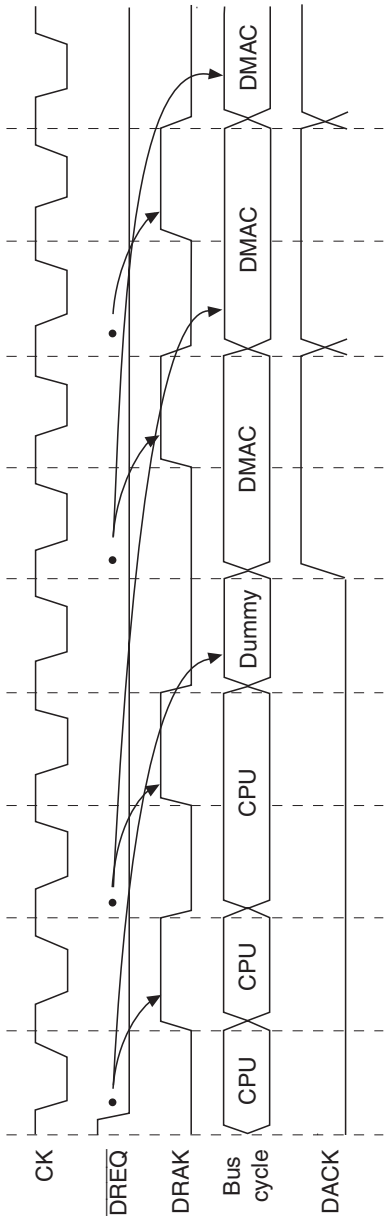

Figure 9.16 Burst Mode, Single Address and Level Detection (Normal Operation)

Burst Mode, Dual Address, and Edge Detection: In burst mode with dual address and edge detection, $\overline{\text{DREQ}}$ sampling is conducted only on the first cycle.

In figure 9.17, DMAC transfer begins, at the earliest, three cycles after the timing of the first sampling. Thereafter, DMAC transfer continues until the end of the data transfer count set in the DMATCR. $\overline{\text{DREQ}}$ sampling is not conducted during this period. Therefore, DRAK is output on the first cycle only.

When DMAC transfer is resumed after being halted by a NMI or address error, be sure to reinput an edge request. The remaining transfer restarts after the first DRAK output.

The DACK output period in burst mode is the same as in cycle steal mode.

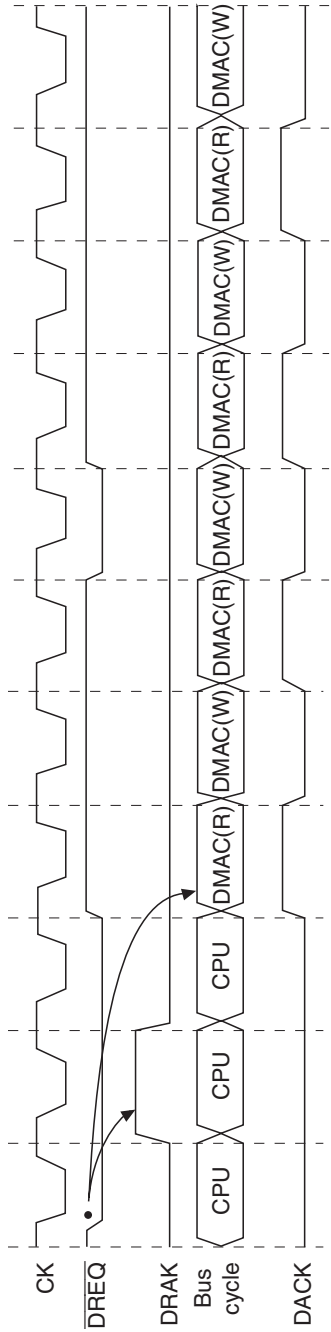

Figure 9.17 Burst Mode, Dual Address and Edge Detection

Burst Mode, Single Address, and Edge Detection: In burst mode with single address and edge detection, $\overline{\text{DREQ}}$ sampling is conducted only on the first cycle. In figure 9.18, a dummy cycle is inserted, at the earliest, three cycles after the timing for the first sampling. During this period, data is undefined, and DACK is not output. Nor is the number of DMAC transfers counted. The actual DMAC transfer begins after one dummy bus cycle output. Thereafter, DMAC transfer continues until the data transfer count set in the DMATCR has ended. $\overline{\text{DREQ}}$ sampling is not conducted during this period. Therefore, DRAK is output on the first cycle only.

When DMAC transfer is resumed after being halted by a NMI or address error, be sure to reinput an edge request. DRAK is output once, and the remaining transfer restarts after output of one dummy cycle.

The DACK output period in burst mode is the same as in cycle steal mode.

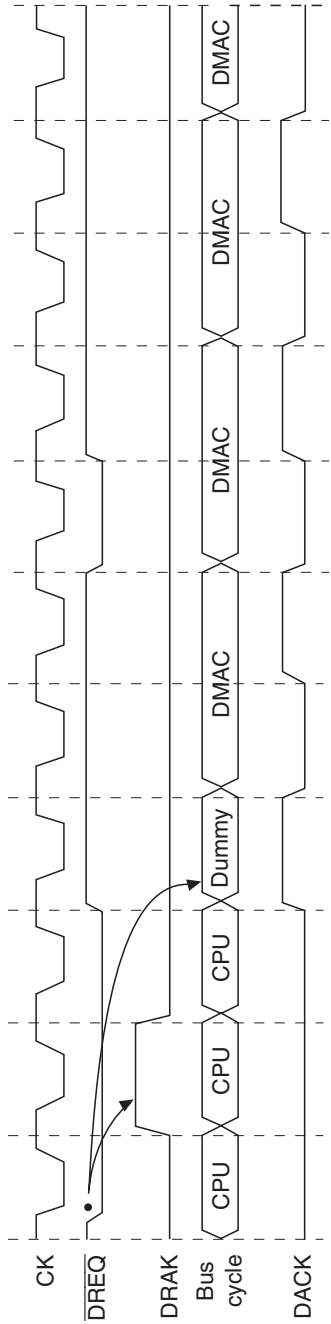

Figure 9.18 Burst Mode, Single Address and Edge Detection

9.3.6 DMA Transfer Ending Conditions

The DMA transfer ending conditions vary for individual channels ending and for all channels ending together.

Individual Channel Ending Conditions: There are two ending conditions. A transfer ends when the value of the channel's DMA transfer count register (DMATCR) is 0, or when the DE bit of the channel's CHCR is cleared to 0.

- When DMATCR is 0: When the DMATCR value becomes 0 and the corresponding channel's DMA transfer ends, the transfer end flag bit (TE) is set in the CHCR. If the IE (interrupt enable) bit has been set, a DMAC interrupt (DEI) is requested of the CPU.
- When DE of CHCR is 0: Software can halt a DMA transfer by clearing the DE bit in the channel's CHCR. The TE bit is not set when this happens.

Conditions for Ending All Channels Simultaneously: Transfers on all channels end when the NMIF (NMI flag) bit or AE (address error flag) bit is set to 1 in the DMAOR, or when the DME bit in the DMAOR is cleared to 0.

- When the NMIF or AE bit is set to 1 in DMAOR: When an NMI interrupt or DMAC address error occurs, the NMIF or AE bit is set to 1 in the DMAOR and all channels stop their transfers. The DMAC obtains the bus rights, and if these flags are set to 1 during execution of a transfer, DMAC halts operation when the transfer processing currently being executed ends, and transfers the bus right to the other bus master. Consequently, even if the NMIF or AE bits are set to 1 during a transfer, the DMA source address register (SAR), designation address register (DAR), and DMA transfer count register (DMATCR) are all updated. The TE bit is not set. To resume the transfers after NMI interrupt or address error processing, clear the appropriate flag bit to 0. To avoid restarting a transfer on a particular channel, clear its DE bit to 0.

  When the processing of a one unit transfer is complete. In a dual address mode direct address transfer, even if an address error occurs or the NMI flag is set during read processing, the transfer will not be halted until after completion of the following write processing. In such a case, SAR, DAR, and DMATCR values are updated.
- When DME is cleared to 0 in DMAOR: Clearing the DME bit to 0 in the DMAOR aborts the transfers on all channels. The TE bit is not set.

9.3.7 DMAC Access from CPU

The space addressed by the DMAC is 3-cycle space. Therefore, when the CPU becomes the bus master and accesses the DMAC, a minimum of three basic clock (CLK) cycles are required for one bus cycle. Also, since the DMAC is located in word space, while a word-size access to the DMAC is completed in one bus cycle, a longword-size access is automatically divided into two word accesses, requiring two bus cycles (six basic clock cycles). These two bus cycles are executed consecutively; a different bus cycle is never inserted between the two word accesses. This applies to both write accesses and read accesses.

9.4 Examples of Use

9.4.1 Example of DMA Transfer between On-Chip SCI and External Memory

In this example, on-chip serial communication interface channel 0 (SCI0) received data is transferred to external memory using the DMAC channel 1.

Table 9.7 indicates the transfer conditions and the setting values of each of the registers.

Table 9.7 Transfer Conditions and Register Set Values for Transfer between On-chip SCI and External Memory

Transfer Conditions	Register	Value
Transfer source: RDR0 of on-chip SCI0	SAR1	H'FFFF81A5
Transfer destination: external memory	DAR1	H'00400000
Transfer count: 64 times	DMATCR1	H'00000040
Transfer source address: fixed	CHCR1	H'00004D05
Transfer destination address: incremented		
Transfer request source: SCI0 (RDR0)		
Bus mode: cycle steal		
Transfer unit: byte		
Interrupt request generation at end of transfer		
Channel priority ranking: 0 > 1	DMAOR	H'0001

9.4.2 Example of DMA Transfer between External RAM and External Device with DACK

In this example, an external request, single address mode transfer with external memory as the transfer source and an external device with DACK as the transfer destination is executed using DMAC channel 1.

Table 9.8 indicates the transfer conditions and the setting values of each of the registers.

Table 9.8 Transfer Conditions and Register Set Values for Transfer between External RAM and External Device with DACK

Transfer Conditions	Register	Value
Transfer source: external RAM	SAR1	H'00400000
Transfer destination: external device with DACK	DAR1	(access by DACK)
Transfer count: 32 times	DMATCR1	H'00000020
Transfer source address: decremented	CHCR1	H'00002269
Transfer destination address: (setting ineffective)		
Transfer request source: external pin ($\overline{\text{DREQ1}}$) edge detection		
Bus mode: burst		
Transfer unit: word		
No interrupt request generation at end of transfer		
Channel priority ranking: 0 > 1	DMAOR	H'0001

9.5 Usage Notes

1. Other than the DMA operation register (DMAOR) accessing in word (16 bit) units, access all registers in word (16 bit) or longword (32 bit) units.
2. When rewriting the RS0 to RS3 bits of CHCR0, CHCR1, first clear the DE bit to 0 (set the DE bit to 0 before doing rewrites with a CHCR byte address).
3. When an NMI interrupt is input, the NMIF bit of the DMAOR is set even when the DMAC is not operating.
4. Set the DME bit of the DMAOR to 0 and make certain that any DMAC received transfer request processing has been completed before entering standby mode.
5. Do not access the DMAC or BSC on-chip peripheral modules from the DMAC.
6. When activating the DMAC, do the CHCR or DMAOR setting as the final step. There are instances where abnormal operation will result if any other registers are established last.
7. After the DMATCR count becomes 0 and the DMA transfer ends normally, always write a 0 to the DMATCR, even when executing the maximum number of transfers on the same channel. There are instances where abnormal operation will result if this is not done.
8. When detecting external requests by falling edge, maintain the external request pin at high level when performing the DMAC establishment.
9. When operating in single address mode, establish an external address as the address. There are instances where abnormal operation will result if an internal address is established.
10. Do not access DMAC register empty addresses (H'FFFF86B2 to H'FFFF86BF, H'FFFF86E4 to H'FFFF86FF). Operation cannot be guaranteed when empty addresses are accessed.

Section 10 Multifunction Timer Pulse Unit (MTU)

10.1 Overview

The SuperH microcomputer has an on-chip 16-bit multifunction timer pulse unit (MTU) with three channels of 16-bit timers.

10.1.1 Features

- Can process a maximum of eight different pulse outputs and inputs.
- Has eight timer general registers (TGR): four for channel 0, and two each for channels 1 and 2 that can be set to function independently as output compare or input capture. The channel 0 TGRC and TGRD registers can be used as buffer registers.
- Can select eight counter input clock sources for all channels
- All channels can be set for the following operating modes:
  - Compare match waveform output: 0 output/1 output/toggle output selectable.
  - Input capture function: Selectable rising edge, falling edge, or both rising and falling edge detection.
  - Counter clearing function: Counters can be cleared by a compare-match or input capture.
  - Synchronizing mode: Two or more timer counters (TCNT) can be written to simultaneously. Two or more timer counters can be simultaneously cleared by a compare-match or input capture. Counter synchronization functions enable synchronized register input/output.
  - PWM mode: PWM output can be provided with any duty cycle. When combined with the counter synchronizing function, up to seven-phase PWM output is enabled (with channels 0 to 2 set to PWM mode 2 and channel 0 synchronized with the TGR0A register (channels 0 to 2 phase output: 3, 2, 2)).
- Channels 0 can be set for buffer operation
  - Input capture register double buffer configuration possible
  - Output compare register automatic re-write possible
- Channels 1, 2 can be independently set to the phase counting mode
  - Two-phase encoder pulse up/down count possible
- Cascade connection operation
  - Can be operated as a 32-bit counter by using the channel 2 input clock for channel 1 overflow/underflow
- High speed access via internal 16-bit bus

- Thirteen interrupt sources
  - Channel 0 has four compare-match/input capture interrupts and one overflow interrupt which can be requested independently.
  - Channels 1 and 2 have two compare-match/input capture interrupts, one overflow interrupt, and one underflow interrupt which can be requested independently.
- Automatic transfer of register data
  - Block transfer, 1-word data transfers and 1-byte data transfers are possible through DMAC activation.
- A/D converter conversion start trigger can be generated
  - Channels 0 to 2 compare-match/input capture signals can be used as A/D converter conversion start triggers.

Table 10.1 summarizes the MTU functions.

Table 10.1 MTU Functions

Item		Channel 0	Channel 1	Channel 2
Counter clocks		Internal: φ/1, φ/4, φ/16, φ/64, φ/256, φ/1024 External: Eight to each channel from TCLKA, TCLKB, TCLKC, and TCLKD		
General registers		TGR0A TGR0B	TGR1A TGR1B	TGR2A TGR2B
General registers/buffer registers		TGR0C TGR0D	No	No
Input/output pins		TIOC0A TIOC0B TIOC0C TIOC0D	TIOC1A TIOC1B	TIOC2A TIOC2B
Counter clear function		TGR compare-match or input capture	TGR compare-match or input capture	TGR compare-match or input capture
Compare match output	0	Yes	Yes	Yes
	1	Yes	Yes	Yes
	Toggle	Yes	Yes	Yes
Input capture function		Yes	Yes	Yes
Synchronization		Yes	Yes	Yes
Buffer operation		Yes	No	No
PWM mode 1		Yes	Yes	Yes
PWM mode 2		Yes	Yes	Yes
Phase counting mode		No	Yes	Yes
DMAC activation		TGR0A compare match or input capture	TGR1A compare match or input capture	TGR2A compare match or input capture
A/D conversion start trigger		TGR0A com-pare match or input capture	TGR1A com-pare match or input capture	TGR2A com-pare match or input capture

Item	Channel 0	Channel 1	Channel 2
Interrupt sources	Compare match/input capture 0A	Compare match/input capture 1A	Compare match/input capture 2A
	Compare match/input capture 0B	Compare match/input capture 1B	Compare match/input capture 2B
	Compare match/input capture 0C	Overflow	Overflow
	Compare match/input capture 0D	Underflow	Underflow
	Overflow	—	—

10.1.2 Block Diagram

Figure 10.1 is the block diagram of the MTU.

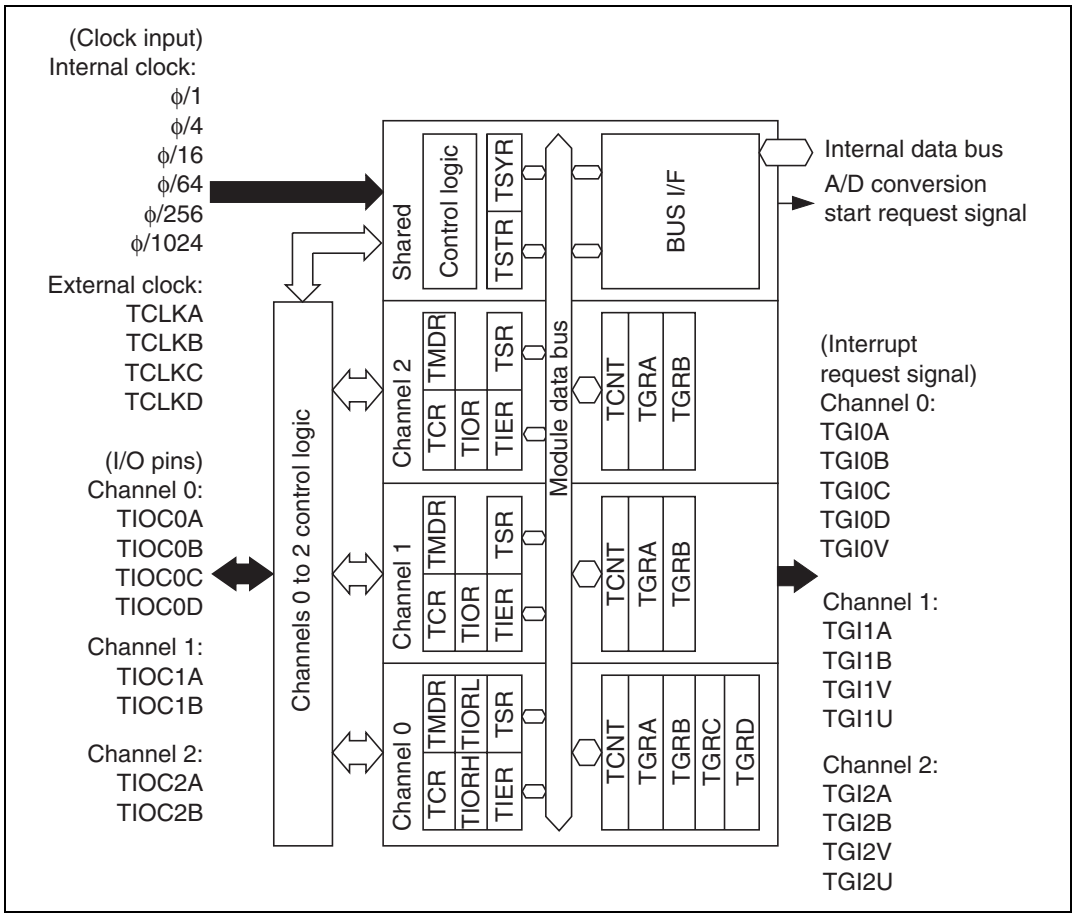

Figure 10.1 MTU Block Diagram

10.1.3 Pin Configuration

Table 10.2 summarizes the MTU pins.

Table 10.2 Pin Configuration

Channel	Name	Pin Name	I/O	Function
Shared	Clock input A	TCLKA	I	Clock A input pin (A-phase input pin in channel 1 phase counting mode)
	Clock input B	TCLKB	I	Clock B input pin (B-phase input pin in channel 1 phase counting mode)
	Clock input C	TCLKC	I	Clock C input pin (A-phase input pin in channel 2 phase counting mode)
	Clock input D	TCLKD	I	Clock D input pin (B-phase input pin in channel 2 phase counting mode)
0	Input capture/output compare-match 0A	TIOC0A	I/O	TGR0A input capture input/output compare output/PWM output pin
	Input capture/output compare-match 0B	TIOC0B	I/O	TGR0B input capture input/output compare output/PWM output pin
	Input capture/output compare-match 0C	TIOC0C	I/O	TGR0C input capture input/output compare output/PWM output pin
	Input capture/output compare-match 0D	TIOC0D	I/O	TGR0D input capture input/output compare output/PWM output pin
1	Input capture/output compare-match 1A	TIOC1A	I/O	TGR1A input capture input/output compare output/PWM output pin
	Input capture/output compare-match 1B	TIOC1B	I/O	TGR1B input capture input/output compare output/PWM output pin
2	Input capture/output compare-match 2A	TIOC2A	I/O	TGR2A input capture input/output compare output/PWM output pin
	Input capture/output compare-match 2B	TIOC2B	I/O	TGR2B input capture input/output compare output/PWM output pin

Note: The TIOC pins output undefined values when they are set to input capture and timer output by the pin function controller (PFC).

10.1.4 Register Configuration

Table 10.3 summarizes the MTU register configuration.

Table 10.3 Register Configuration

Channel	Name	Abbreviation	R/W	Initial Value	Address	Access Size (Bits) *1
Shared	Timer start register	TSTR	R/W	H'00	H'FFFF8240	8, 16, 32
	Timer synchro register	TSYR	R/W	H'00	H'FFFF8241	
0	Timer control register 0	TCR0	R/W	H'00	H'FFFF8260	
	Timer mode register 0	TMDR0	R/W	H'C0	H'FFFF8261	
	Timer I/O control register 0H	TIOR0H	R/W	H'00	H'FFFF8262	
	Timer I/O control register 0L	TIOR0L	R/W	H'00	H'FFFF8263	
	Timer interrupt enable register 0	TIER0	R/W	H'40	H'FFFF8264	
	Timer status register 0	TSR0	R/(W)*2	H'C0	H'FFFF8265	
	Timer counter 0	TCNT0	R/W	H'0000	H'FFFF8266	16, 32
	General register 0A	TGR0A	R/W	H'FFFF	H'FFFF8268	
	General register 0B	TGR0B	R/W	H'FFFF	H'FFFF826A	
	General register 0C	TGR0C	R/W	H'FFFF	H'FFFF826C	
	General register 0D	TGR0D	R/W	H'FFFF	H'FFFF826E	
1	Timer control register 1	TCR1	R/W	H'00	H'FFFF8280	8, 16, 32
	Timer mode register 1	TMDR1	R/W	H'C0	H'FFFF8281	
	Timer I/O control register 1	TIOR1	R/W	H'00	H'FFFF8282	
	Timer interrupt enable register 1	TIER1	R/W	H'40	H'FFFF8284	
	Timer status register 1	TSR1	R/(W)*2	H'C0	H'FFFF8285	
	Timer counter 1	TCNT1	R/W	H'0000	H'FFFF8286	16, 32
	General register 1A	TGR1A	R/W	H'FFFF	H'FFFF8288	
	General register 1B	TGR1B	R/W	H'FFFF	H'FFFF828A	

Channel	Name	Abbreviation	R/W	Initial Value	Address	Access Size (Bits) *1
2	Timer control register 2	TCR2	R/W	H'00	H'FFFF82A0	8, 16, 32
	Timer mode register 2	TMDR2	R/W	H'C0	H'FFFF82A1	
	Timer I/O control register 2	TIOR2	R/W	H'00	H'FFFF82A2	
	Timer interrupt enable register 2	TIER2	R/W	H'40	H'FFFF82A4	
	Timer status register 2	TSR2	R/(W)*2	H'C0	H'FFFF82A5	
	Timer counter 2	TCNT2	R/W	H'0000	H'FFFF82A6	16, 32
	General register 2A	TGR2A	R/W	H'FFFF	H'FFFF82A8	
	General register 2B	TGR2B	R/W	H'FFFF	H'FFFF82AA	

Notes: Do not access empty addresses.

1. 16-bit registers (TCNT, TGR) cannot be read or written in 8-bit units.
2. Write 0 to clear flags.

10.2 MTU Register Descriptions

10.2.1 Timer Control Register (TCR)

The TCR is an 8-bit read/write register for controlling the TCNT counter for each channel. The MTU has three TCR registers, one for each of the channels 0 to 2. TCR is initialized to H'00 by a power-on reset or the standby mode.

Channel 0: TCR0

Bit:	7	6	5	4	3	2	1	0
	CCLR2	CCLR1	CCLR0	CKEG1	CKEG0	TPSC2	TPSC1	TPSC0
Initial value:	0	0	0	0	0	0	0	0
R/W:	R/W	R/W	R/W	R/W	R/W	R/W	R/W	R/W

Channels 1, 2: TCR1, TCR2

Bit:	7	6	5	4	3	2	1	0
	—	CCLR1	CCLR0	CKEG1	CKEG0	TPSC2	TPSC1	TPSC0
Initial value:	0	0	0	0	0	0	0	0
R/W:	R	R/W	R/W	R/W	R/W	R/W	R/W	R/W

Bits 7 to 5—Counter Clear 2 to 0 (CCLR2 to CCLR0): Select the counter clear source for the TCNT counter.

Channels 0

Bit 7 CCLR2	Bit 6 CCLR1	Bit 5 CCLR0	Description
0	0	0	TCNT clear disabled (initial value)
		1	TCNT is cleared by TGRA compare-match or input capture
	1	0	TCNT is cleared by TGRB compare-match or input capture
		1	Synchronizing clear: TCNT is cleared in synchronization with clear of other channel counters operating in sync.*[1]
1	0	0	TCNT clear disabled
		1	TCNT is cleared by TGRC compare-match or input capture*[2]
	1	0	TCNT is cleared by TGRD compare-match or input capture*[2]
		1	Synchronizing clear: TCNT is cleared in synchronization with clear of other channel counters operating in sync*[1]

Notes: 1. Setting the SYNC bit of the TSYR to 1 sets the synchronization.
2. When TGRC or TGRD are functioning as buffer registers, TCNT is not cleared because the buffer registers have priority and compare-match/input captures do not occur.

Channels 1, 2

Bit 7 Reserved*[1]	Bit 6 CCLR1	Bit 5 CCLR0	Description
0	0	0	TCNT clear disabled (initial value)
		1	TCNT is cleared by TGRA compare-match or input capture
	1	0	TCNT is cleared by TGRB compare-match or input capture
		1	Synchronizing clear: TCNT is cleared in synchronization with clear of other channel counters operating in sync*[2]

Notes: 1. The bit 7 of channels 1 and 2 is reserved. It always reads 0, and cannot be modified.
2. Setting the SYNC bit of the TSYR to 1 sets the synchronization.

Bits 4 and 3—Clock Edge 1, 0 (CKEG1 and CKEG0): CKEG1 and CKEG0 select the input clock edges. When counting is done on both edges of the internal clock the input clock frequency becomes 1/2 (Example: both edges of ϕ/4 = rising edge of ϕ/2). When phase count mode is used with channels 1, 2, these settings are ignored, as the phase count mode settings have priority.

Bit 4 CKEG1	Bit 3 CKEG0	Description	
0	0	Count on rising edges	(initial value)
	1	Count on falling edges	
1	X	Count on both rising and falling edges	

Notes: 1. X: 0 or 1, don't care.
2. Internal clock edge selection is effective when the input clock is ϕ/4 or slower. These settings are ignored when ϕ/1, or the overflow/underflow of another channel is selected for the input clock.

Bits 2 to 0—Timer Prescaler 2 to 0 (TPSC2 to TPSC0): TPSC2 to TPSC0 select the counter clock source for the TCNT. An independent clock source can be selected for each channel. Table 10.4 shows the possible settings for each channel.

Table 10.4 MTU Clock Sources

	Internal Clock						Other Channel	External Clock			
Channel	ϕ/1	ϕ/4	ϕ/16	ϕ/64	ϕ/256	ϕ/1024	Overflow/Underflow	TCLKA	TCLKB	TCLKC	TCLKD
0	O	O	O	O	X	X	X	O	O	O	O
1	O	O	O	O	O	X	O	O	O	X	X
2	O	O	O	O	X	O	X	O	O	O	X

Note: Symbols:
O: Setting possible
X: Setting impossible

Channel 0

Bit 2 TPSC2	Bit 1 TPSC1	Bit 0 TPSC0	Description	
0	0	0	Internal clock: count with $\phi/1$	(initial value)
		1	Internal clock: count with $\phi/4$	
	1	0	Internal clock: count with $\phi/16$	
		1	Internal clock: count with $\phi/64$	
1	0	0	External clock: count with the TCLKA pin input	
		1	External clock: count with the TCLKB pin input	
	1	0	External clock: count with the TCLKC pin input	
		1	External clock: count with the TCLKD pin input	

Channel 1

Bit 2 TPSC2	Bit 1 TPSC1	Bit 0 TPSC0	Description	
0	0	0	Internal clock: count with $\phi/1$	(initial value)
		1	Internal clock: count with $\phi/4$	
	1	0	Internal clock: count with $\phi/16$	
		1	Internal clock: count with $\phi/64$	
1	0	0	External clock: count with the TCLKA pin input	
		1	External clock: count with the TCLKB pin input	
	1	0	Internal clock: count with $\phi/256$	
		1	Count with the TCNT2 overflow/underflow	

Note: These settings are ineffective when channel 1 is in phase counting mode.

Channel 2

Bit 2 TPSC2	Bit 1 TPSC1	Bit 0 TPSC0	Description	
0	0	0	Internal clock: count with $\phi/1$	(initial value)
		1	Internal clock: count with $\phi/4$	
	1	0	Internal clock: count with $\phi/16$	
		1	Internal clock: count with $\phi/64$	
1	0	0	External clock: count with the TCLKA pin input	
		1	External clock: count with the TCLKB pin input	
	1	0	External clock: count with the TCLKC pin input	
		1	Internal clock: count with $\phi/1024$	

Note: These settings are ineffective when channel 2 is in phase counting mode.

10.2.2 Timer Mode Register (TMDR)

The TMDR is an 8-bit read/write register that sets the operating mode for each channel. The MTU has three TMDR registers, one for each channel. TMDR is initialized to H'C0 by a power-on reset or the standby mode.

Channel 0: TMDR0

Bit:	7	6	5	4	3	2	1	0
	—	—	BFB	BFA	MD3	MD2	MD1	MD0
Initial value:	1	1	0	0	0	0	0	0
R/W:	R	R	R/W	R/W	R/W	R/W	R/W	R/W

Channels 1, 2: TMDR1, TMDR2

Bit:	7	6	5	4	3	2	1	0
	—	—	—	—	MD3	MD2	MD1	MD0
Initial value:	1	1	0	0	0	0	0	0
R/W:	R	R	R	R	R/W	R/W	R/W	R/W

Bits 7 and 6—Reserved: These bits always read as 1. The write value should always be 1.

Bit 5—Buffer Operation B (BFB): Designates whether to use the TGRB register for normal operation, or buffer operation in combination with the TGRD register. When using TGRD as a buffer register, no TGRD register input capture/output compares are generated.

This bit is reserved in channels 1 and 2, which have no TGRD registers. This bit always read as 0. The write value should always be 0.

Bit 5 BFB	Description	
0	TGRB operates normally	(initial value)
1	TGRB and TGRD buffer operation	

Bit 4—Buffer Operation A (BFA): Designates whether to use the TGRA register for normal operation, or buffer operation in combination with the TGRC register. When using TGRC as a buffer register, no TGRC register input capture/output compares are generated.

This bit is reserved in channels 1 and 2, which have no TGRC registers. This bit always read as 0. The write value should always be 0.

Bit 4 BFA	Description	
0	TGRA operates normally	(initial value)
1	TGRA and TGRC buffer operation	

Bits 3 to 0—Modes 3 to 0 (MD3 to MD0): These bits set the timer operation mode.

Bit 3 MD3	Bit 2 MD2	Bit 1 MD1	Bit 0 MD0	Description
0	0	0	0	Normal operation (initial value)
			1	Reserved (do not set)
		1	0	PWM mode 1
			1	PWM mode 2
	1	0	0	Phase counting mode 1*
			1	Phase counting mode 2*
		1	0	Phase counting mode 3*
			1	Phase counting mode 4*
1	0	0	0	Reserved (do not set)
			1	Reserved (do not set)
		1	0	Reserved (do not set)
			1	Reserved (do not set)
	1	0	0	Reserved (do not set)
			1	Reserved (do not set)
		1	0	Reserved (do not set)
			1	Reserved (do not set)

Note: * Phase measurement mode can not be set for channel 0.

10.2.3 Timer I/O Control Register (TIOR)

The TIOR is a register that controls the TGR. The MTU has four TIOR registers, two for channels 0 and one each for channels 1 and 2. TIOR is initialized to H'00 by a power-on reset or the standby mode.

Channel 0: TIOR0H

Channels 1, 2: TIOR1, TIOR2

Bit:	7	6	5	4	3	2	1	0
	IOB3	IOB2	IOB1	IOB0	IOA3	IOA2	IOA1	IOA0
Initial value:	0	0	0	0	0	0	0	0
R/W:	R/W	R/W	R/W	R/W	R/W	R/W	R/W	R/W

Bits 7 to 4—I/O Control B3 to B0 (IOB3 to IOB0): These bits set the TGRB register function.

Bits 3 to 0—I/O Control A3 to B0 (IOA3 to IOA0): These bits set the TGRA register function.

Channel 0: TIOR0L

Bit:	7	6	5	4	3	2	1	0
	IOD3	IOD2	IOD1	IOD0	IOC3	IOC2	IOC1	IOC0
Initial value:	0	0	0	0	0	0	0	0
R/W:	R/W	R/W	R/W	R/W	R/W	R/W	R/W	R/W

Note: When the TGRC or TGRD registers are set for buffer operation, these settings become ineffective and the operation is as a buffer register.

Bits 7 to 4—I/O Control D3 to D0 (IOD3 to IOD0): These bits set the TGRD register function.

Bits 3 to 0—I/O Control C3 to C0 (IOC3 to IOC0): These bits set the TGRC register function.

Channel 0 (TIOR0H Register)

Bits 7 to 4—I/O Control B3 to B0 (IOB3 to IOB0): These bits set the TGR0B register function.

Bit 7 IOB3	Bit 6 IOB2	Bit 5 IOB1	Bit 4 IOB0	Description		
0	0	0	0	TGR0B is an output compare register	Output disabled	(initial value)
			1		Initial output is 0	Output 0 on compare-match
		1	0			Output 1 on compare-match
			1			Toggle output on compare-match
	1	0	0		Output disabled	
			1		Initial output is 1	Output 0 on compare-match
		1	0			Output 1 on compare-match
			1			Toggle output on compare-match
1	0	0	0	TGR0B is an input capture register	Capture input source is the TIOC0B pin	Input capture on rising edge
			1			Input capture on falling edge
		1	0			Input capture on both edges
			1			
	1	0	0		Capture input source is channel 1/ count clock	Input capture on TCNT1 count up/count down
			1			
		1	0			
			1			

Bits 3 to 0—I/O Control A3 to A0 (IOA3 to IOA0): These bits set the TGR0A register function.

Bit 3 IOA3	Bit 2 IOA2	Bit 1 IOA1	Bit 0 IOA0	Description		
0	0	0	0	TGR0A is an output compare register	Output disabled	(initial value)
			1		Initial output is 0	Output 0 on compare-match
		1	0			Output 1 on compare-match
			1			Toggle output on compare-match
	1	0	0		Output disabled	
			1		Initial output is 1	Output 0 on compare-match
		1	0			Output 1 on compare-match
			1			Toggle output on compare-match
1	0	0	0	TGR0A is an input capture register	Capture input source is the TIOC0A pin	Input capture on rising edge
			1			Input capture on falling edge
		1	0			Input capture on both edges
			1			
	1	0	0		Capture input source is channel 1/ count clock	Input capture on TCNT1 count up/count down
			1			
		1	0			
			1			

Channel 0 (TIOR0L Register)

Bits 7 to 4—I/O Control D3 to D0 (IOD3 to IOD0): These bits set the TGR0D register function.

Bit 7 IOD3	Bit 6 IOD2	Bit 5 IOD1	Bit 4 IOD0	Description		
0	0	0	0	TGR0D is an output compare register	Output disabled	(initial value)
			1		Initial output is 0	Output 0 on compare-match
		1	0			Output 1 on compare-match
			1			Toggle output on compare-match
	1	0	0		Output disabled	
			1		Initial output is 1	Output 0 on compare-match
		1	0			Output 1 on compare-match
			1			Toggle output on compare-match
1	0	0	0	TGR0D is an input capture register	Capture input source is the TIOC0D pin	Input capture on rising edge
			1			Input capture on falling edge
		1	0			Input capture on both edges
			1			
	1	0	0		Capture input source is channel 1/ count clock	Input capture on TCNT1 count up/count down
			1			
		1	0			
			1			

Note: When the BFB bit of TMDR0 is set to 1 and TGR0D is being used as a buffer register, these settings become ineffective and input capture/output compares do not occur.

Bits 3 to 0—I/O Control C3 to C0 (IOC3 to IOC0): These bits set the TGR0C register function.

Bit 3 IOC3	Bit 2 IOC2	Bit 1 IOC1	Bit 0 IOC0	Description		
0	0	0	0	TGR0C is an output compare register	Output disabled	(initial value)
			1		Initial output is 0	Output 0 on compare-match
		1	0			Output 1 on compare-match
			1			Toggle output on compare-match
	1	0	0		Output disabled	
			1		Initial output is 1	Output 0 on compare-match
		1	0			Output 1 on compare-match
			1			Toggle output on compare-match
1	0	0	0	TGR0C is an input capture register	Capture input source is the TIOC0C pin	Input capture on rising edge
			1			Input capture on falling edge
		1	0			Input capture on both edges
			1			
	1	0	0		Capture input source is channel 1/ count clock	Input capture on TCNT1 count up/count down
			1			
		1	0			
			1			

Note: When the BFA bit of TMDR0 is set to 1 and TGR0C is being used as a buffer register, these settings become ineffective and input capture/output compares do not occur.

Channel 1 (TIOR1 Register)

Bits 7 to 4—I/O Control B3 to B0 (IOB3 to IOB0): These bits set the TGR1B register function.

Bit 7 IOB3	Bit 6 IOB2	Bit 5 IOB1	Bit 4 IOB0	Description		
0	0	0	0	TGR1B is an output compare register	Output disabled	(initial value)
			1		Initial output is 0	Output 0 on compare-match
		1	0			Output 1 on compare-match
			1			Toggle output on compare-match
	1	0	0		Output disabled	
			1		Initial output is 1	Output 0 on compare-match
		1	0			Output 1 on compare-match
			1			Toggle output on compare-match
1	0	0	0	TGR1B is an input capture register	Capture input source is the TIOC1B pin	Input capture on rising edge
			1			Input capture on falling edge
		1	0			Input capture on both edges
			1			
	1	0	0		Capture input source TGR0C compare/match input capture	Input capture on channel 0/TGR0C compare-match/input capture generation
			1			
		1	0			
			1			

Bits 3 to 0—I/O Control A3 to A0 (IOA3 to IOA0): These bits set the TGR1A register function.

Bit 3 IOA3	Bit 2 IOA2	Bit 1 IOA1	Bit 0 IOA0	Description		
0	0	0	0	TGR1A is an output compare register	Output disabled	(initial value)
			1		Initial output is 0	Output 0 on compare-match
		1	0			Output 1 on compare-match
			1			Toggle output on compare-match
	1	0	0		Output disabled	
			1		Initial output is 1	Output 0 on compare-match
		1	0			Output 1 on compare-match
			1			Toggle output on compare-match
1	0	0	0	TGR1A is an input capture register	Capture input source is the TIOC1A pin	Input capture on rising edge
			1			Input capture on falling edge
		1	0			Input capture on both edges
			1			
	1	0	0		Capture input source is TGR0A compare-match/input capture	Input capture on channel 0/TGR0A compare-match/input capture generation
			1			
		1	0			
			1			

Channel 2 (TIOR2 Register)

Bits 7 to 4—I/O Control B3 to B0 (IOB3 to IOB0): These bits set the TGR2B register function.

Bit 7 IOB3	Bit 6 IOB2	Bit 5 IOB1	Bit 4 IOB0	Description		
0	0	0	0	TGR2B is an output compare register	Output disabled	(initial value)
			1		Initial output is 0	Output 0 on compare-match
		1	0			Output 1 on compare-match
			1			Toggle output on compare-match
	1	0	0		Output disabled	
			1		Initial output is 1	Output 0 on compare-match
		1	0			Output 1 on compare-match
			1			Toggle output on compare-match
1	0	0	0	TGR2B is an input capture register	Capture input source is the TIOC2B pin	Input capture on rising edge
			1			Input capture on falling edge
		1	0			Input capture on both edges
			1			
	1	0	0			Input capture on rising edge
			1			Input capture on falling edge
		1	0			Input capture on both edges
			1			

Bits 3 to 0—I/O Control A3 to A0 (IOA3 to IOA0): These bits set the TGR2A register function.

Bit 3 IOA3	Bit 2 IOA2	Bit 1 IOA1	Bit 0 IOA0	Description		
0	0	0	0	TGR2A is an output compare register	Output disabled	(initial value)
			1		Initial output is 0	Output 0 on compare-match
		1	0			Output 1 on compare-match
			1			Toggle output on compare-match
	1	0	0		Output disabled	
			1		Initial output is 1	Output 0 on compare-match
		1	0			Output 1 on compare-match
			1			Toggle output on compare-match
1	0	0	0	TGR2A is an input capture register	Capture input source is the TIOC2A pin	Input capture on rising edge
			1			Input capture on falling edge
		1	0			Input capture on both edges
			1			
	1	0	0			Input capture on rising edge
			1			Input capture on falling edge
		1	0			Input capture on both edges
			1			

10.2.4 Timer Interrupt Enable Register (TIER)

The TIER is an 8-bit register that controls the enable/disable of interrupt requests for each channel. The MTU has three TIER registers, one each for channel. TIER is initialized to H'40 by a reset or by standby mode.

Channel 0: TIER0

Bit:	7	6	5	4	3	2	1	0
	TTGE	—	—	TCIEV	TGIED	TGIEC	TGIEB	TGIEA
Initial value:	0	1	0	0	0	0	0	0
R/W:	R/W	R	R	R/W	R/W	R/W	R/W	R/W

Channels 1, 2: TIER1, TIER2

Bit:	7	6	5	4	3	2	1	0
	TTGE	—	TCIEU	TCIEV	—	—	TGIEB	TGIEA
Initial value:	0	1	0	0	0	0	0	0
R/W:	R/W	R	R/W	R/W	R	R	R/W	R/W

Bit 7—A/D Conversion Start Request Enable (TTGE): Enables or disables generation of an A/D conversion start request by a TGRA register input capture/compare-match.

Bit 7 TTGE	Description	
0	Disable A/D conversion start requests	(initial value)
1	Enable A/D conversion start request generation	

Bit 6—Reserved: This bit always read as 1. The write value should always be 1.

Bit 5—Underflow Interrupt Enable (TCIEU): Enables or disables interrupt requests when the underflow flag (TCFU) of the channel 1, 2 timer status register (TSR) is set to 1.

This bit is reserved for channel 0. It always reads as 0. The write value should always be 0.

Bit 5 TCIEU	Description	
0	Disable UDF interrupt requests (TCIU)	(initial value)
1	Enable UDF interrupt requests (TCIU)	

Bit 4—Overflow Interrupt Enable (TCIEV): Enables or disables interrupt requests when the overflow flag TCFV of the timer status register (TSR) is set to 1.

Bit 4 TCIEV	Description	
0	Disable TCFV interrupt requests (TCIV)	(initial value)
1	Enable TCFV interrupt requests (TCIV)	

Bit 3—TGR Interrupt Enable D (TGIED): Enables or disables interrupt TGFD requests when the TGFD bit of the channel 0 TSR register is set to 1.

This bit is reserved for channels 1 and 2. It always reads as 0. The write value should always be 0.

Bit 3 TGIED	Description	
0	Disable interrupt requests (TGID) due to the TGFD bit	(initial value)
1	Enable interrupt requests (TGID) due to the TGFD bit	

Bit 2—TGR Interrupt Enable C (TGIEC): Enables or disables TGFC interrupt requests when the TGFC bit of the Channel 0 TSR register is set to 1.

This bit is reserved for channels 1 and 2. It always reads as 0. The write value should always be 0.

Bit 2 TGIEC	Description	
0	Disable interrupt requests (TGIC) due to the TGFC bit	(initial value)
1	Enable interrupt requests (TGIC) due to the TGFC bit	

Bit 1—TGR Interrupt Enable B (TGIEB): Enables or disables TGFB interrupt requests when the TGFB bit of the TSR register is set to 1.

Bit 1 TGIEB	Description	
0	Disable interrupt requests (TGIB) due to the TGFB bit	(initial value)
1	Enable interrupt requests (TGIB) due to the TGFB bit	

Bit 0—TGR Interrupt Enable A (TGIEA): Enables or disables TGFA interrupt requests when the TGFA bit of the TSR register is set to 1.

Bit 0 TGIEA	Description	
0	Disable interrupt requests (TGIA) due to the TGFA bit	(initial value)
1	Enable interrupt requests (TGIA) due to the TGFA bit	

10.2.5 Timer Status Register (TSR)

The timer status register (TSR) is an 8-bit register that indicates the status of each channel. The MTU has three TSR registers, one each for channel. TSR is initialized to H'C0 by a power-on reset or by standby mode.

Channel 0: TSR0

Bit:	7	6	5	4	3	2	1	0
	—	—	—	TCFV	TGFD	TGFC	TGFB	TGFA
Initial value:	1	1	0	0	0	0	0	0
R/W:	R	R	R	R/(W)*	R/(W)*	R/(W)*	R/(W)*	R/(W)*

Note: * Only 0 writes to clear the flags are possible.

Channels 1, 2: TSR1, TSR2

Bit:	7	6	5	4	3	2	1	0
	TCFD	—	TCFU	TCFV	—	—	TGFB	TGFA
Initial value:	1	1	0	0	0	0	0	0
R/W:	R	R	R/(W)*	R/(W)*	R	R	R/(W)*	R/(W)*

Note: * Only 0 writes to clear the flags are possible.

Bit 7—Count Direction Flag (TCFD): This status flag indicates the count direction of the channel 1, 2 TCNT counters.

This bit is reserved in channel 0. This bit always reads as 1. The write value should always be 1.

Bit 7 TCFD	Description	
0	TCNT counts down	
1	TCNT counts up	(initial value)

Bit 6—Reserved: This bit always reads as 1. The write value should always be 1.

Bit 5—Underflow Flag (TCFU): This status flag indicates the occurrence of a channel 1, 2 TCNT counter underflow.

This bit is reserved in channel 0. This bit always reads as 0. The write value should always be 0.

Bit 5 TCFU	Description
0	Clear condition: With TCFU = 1, a 0 write to TCFU after reading it (initial value)
1	Set condition: When the TCNT value underflows (H'0000 → H'FFFF)

Bit 4—Overflow Flag (TCFV): This status flag indicates the occurrence of a TCNT counter overflow.

Bit 4 TCFV	Description
0	Clear condition: With TCFV = 1, a 0 write to TCFV after reading it (initial value)
1	Set condition: When the TCNT value overflows (H'FFFF → H'0000)

Bit 3—Input Capture/Output Compare Flag D (TGFD): This status flag indicates the occurrence of a channel 0 TGRD register input capture or compare-match.

This bit is reserved in channels 1 and 2. It always reads as 0. The write value should always be 0.

Bit 3 TGFD	Description
0	Clear condition: With TGFD = 1, a 0 write to TGFD following a read (initial value)
1	Set conditions: • When TGRD is functioning as an output compare register (TCNT = TGRD) • When TGRD is functioning as input capture (the TCNT value is sent to TGRD by the input capture signal)

Bit 2—Input Capture/Output Compare Flag C (TGFC): This status flag indicates the occurrence of a Channel 0 TGRC register input capture or compare-match.

This bit is reserved for channels 1 and 2. It always reads as 0. The write value should always be 0.

Bit 2 TGFC	Description
0	Clear condition: With TGFC = 1, a 0 write to TGFC following a read (initial value)
1	Set conditions: • When TGRC is functioning as an output compare register (TCNT = TGRC) • When TGRC is functioning as input capture (the TCNT value is sent to TGRC by the input capture signal)

Bit 1—Input Capture/Output Compare Flag B (TGFB): This status flag indicates the occurrence of a TGRB register input capture or compare-match.

Bit 1 TGFB	Description
0	Clear condition: With TGFB = 1, a 0 write to TGFB following a read (initial value)
1	Set conditions: • When TGRB is functioning as an output compare register (TCNT = TGRB) • When TGRB is functioning as input capture (the TCNT value is sent to TGRB by the input capture signal)

Bit 0—Input Capture/Output Compare Flag A (TGFA): This status flag indicates the occurrence of a TGRA register input capture or compare-match.

Bit 0 TGFA	Description
0	Clear condition: With TGFA = 1, a 0 write to TGFA following a read (Cleared by DMAC transfer due to TGFA) (initial value)
1	Set conditions: • When TGRA is functioning as an output compare register (TCNT = TGRA) • When TGRA is functioning as input capture (the TCNT value is sent to TGRA by the input capture signal)

10.2.6 Timer Counters (TCNT)

The timer counters (TCNT) are 16-bit counters, with one for each channel, for a total of three.

The TCNT are initialized to H'0000 by a power-on reset and when in standby mode. Accessing the TCNT counters in 8-bit units is prohibited. Always access in 16-bit units.

Channel	Abbreviation	Function
0	TCNT0	Increment counter
1	TCNT1	Increment/decrement counter*
2	TCNT2	Increment/decrement counter*

Note: * Can only be used as an increment/decrement counter in phase counting mode, with other channel overflow/underflow counting. It becomes an increment counter in all other cases.

Bit:	15	14	13	12	11	10	9	8
Initial value:	0	0	0	0	0	0	0	0
R/W:	R/W	R/W	R/W	R/W	R/W	R/W	R/W	R/W

Bit:	7	6	5	4	3	2	1	0
Initial value:	0	0	0	0	0	0	0	0
R/W:	R/W	R/W	R/W	R/W	R/W	R/W	R/W	R/W

10.2.7 Timer General Register (TGR)

Each timer general register (TGR) is a 16-bit register that can function as either an output compare register or an input capture register. There are a total of eight TGR, four for channel 0, and two each for channels 1 and 2. The TGRC and TGRD of channel 0 can be set to operate as buffer registers. The TGR register and buffer register combinations are TGRA with TGRC, and TGRB with TGRD.

The TGRs are initialized to H'FFFF by a power-on reset or in standby mode. Accessing of the TGRs in 8-bit units is disabled; they may only be accessed in 16-bit units.

Bit:	15	14	13	12	11	10	9	8
Initial value:	1	1	1	1	1	1	1	1
R/W:	R/W	R/W	R/W	R/W	R/W	R/W	R/W	R/W

Bit:	7	6	5	4	3	2	1	0
Initial value:	1	1	1	1	1	1	1	1
R/W:	R/W	R/W	R/W	R/W	R/W	R/W	R/W	R/W

10.2.8 Timer Start Register (TSTR)

The timer start register (TSTR) is an 8-bit read/write register that starts and stops the timer counters (TCNT) of channels 0 to 2. TSTR is initialized to H'00 upon power-on reset or standby mode.

Bit:	7	6	5	4	3	2	1	0
	—	—	—	—	—	CST2	CST1	CST0
Initial value:	0	0	0	0	0	0	0	0
R/W:	R	R	R	R	R	R/W	R/W	R/W

Bits 2 to 0—Counter Start 4 to 0 (CST4 to CST0): Select the start and stop of the timer counters (TCNT). The counter start to channel and bit to channel correspondence are indicated in the tables below.

Counter Start	Channel
CST2	Channel 2 (TCNT2)
CST1	Channel 1 (TCNT1)
CST0	Channel 0 (TCNT0)

Bit n CSTn	Description	
0	TCNTn count is halted	(initial value)
1	TCNTn counts	

Note: n = 2 to 0.
If 0 is written to the CST bit during operation with the TIOC pin in output status, the counter stops, but the TIOC pin output compare output level is maintained. If a write is done to the TIOR register while the CST bit is a 0, the pin output level is updated to the established initial output value.

Bits 7 to 3—Reserved: These bits always read as 0. The write value should always be 0.

10.2.9 Timer Synchro Register (TSYR)

The timer synchro register (TSYR) is an 8-bit read/write register that selects independent or synchronous TCNT counter operation for channels 0 to 2. Channels for which 1 is set in the corresponding bit will be synchronized. TSYR is initialized to H'00 upon power-on reset or standby mode.

Bit:	7	6	5	4	3	2	1	0
	—	—	—	—	—	SYNC2	SYNC1	SYNC0
Initial value:	0	0	0	0	0	0	0	0
R/W:	R	R	R	R	R	R/W	R/W	R/W

Bits 2 to 0—Timer Synchronization 2 to 0 (SYNC2 to SYNC0): Selects operation independent of, or synchronized to, other channels. Synchronous operation allows synchronous clears due to multiple TCNT synchronous presets and other channel counter clears. A minimum of two channels must have SYNC bits set to 1 for synchronous operation. For synchronization clearing, it is necessary to set the TCNT counter clear sources (the CCLR2 to CCLR0 bits of the TCR register), in addition to the SYNC bit. The counter start to channel and bit-to-channel correspondence are indicated in the tables below.

Counter Start	Channel
SYNC2	Channel 2 (TCNT2)
SYNC1	Channel 1 (TCNT1)
SYNC0	Channel 0 (TCNT0)

Bit n SYNCn	Description
0	Timer counter (TCNTn) independent operation (initial value) (TCNTn preset/clear unrelated to other channels)
1	Timer counter synchronous operation*[1] TCNTn synchronous preset/ synchronous clear*[2] possible

Notes: n = 2 to 0.

1. Minimum of two channel SYNC bits must be set to 1 for synchronous operation.
2. TCNT counter clear sources (CCLR2 to CCLR0 bits of the TCR register) must be set in addition to the SYNC bit in order to have clear synchronization.

Bits 7 to 3—Reserved: These bits always read as 0. The write value should always be 0.

10.3 Bus Master Interface

10.3.1 16-Bit Registers

The timer counters (TCNT) and general registers (TGR) are 16-bit registers. A 16-bit data bus to the bus master enables 16-bit read/writes. 8-bit read/write is not possible. Always access in 16-bit units. Figure 10.2 shows an example of 16-bit register access operation.

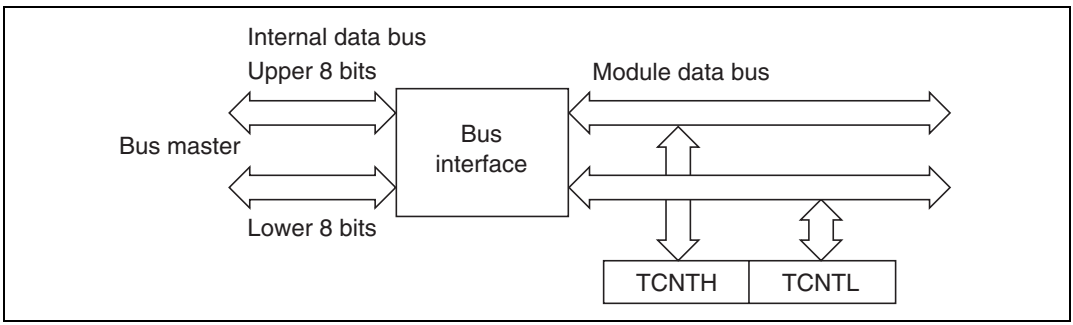

Figure 10.2 16-Bit Register Access Operation (Bus Master ↔ TCNT (16 Bit))

10.3.2 8-Bit Registers

All registers other than the TCNT and general registers (TGR) are 8-bit registers. These are connected to the CPU by a 16-bit data bus, so 16-bit read/writes and as 8-bit read/writes are both possible (figures 10.3 to 10.5).

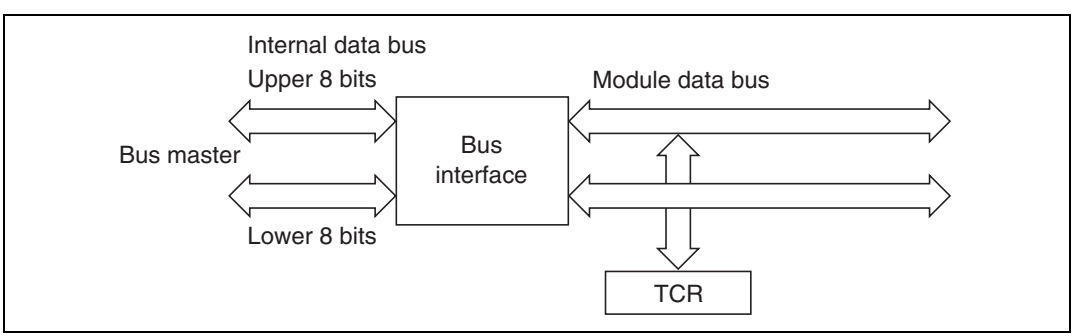

Figure 10.3 8-Bit Register Access Operation (Bus Master ↔ TCR (Upper 8 Bits))

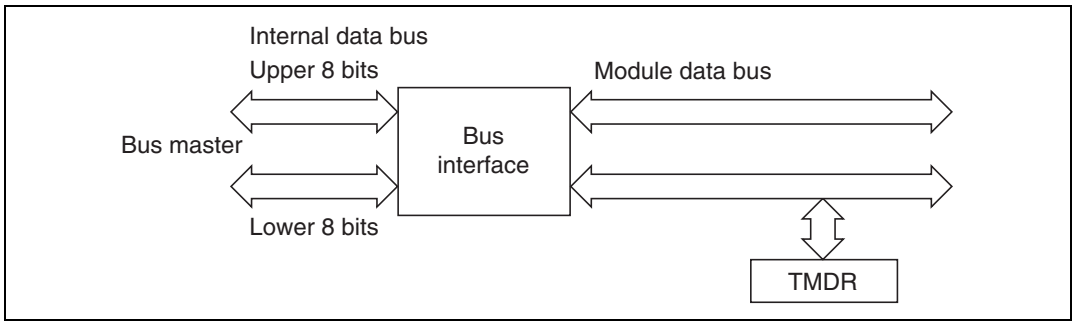

Figure 10.4 8-Bit Register Access Operation (Bus Master ↔ TMDR (Lower 8 Bits))

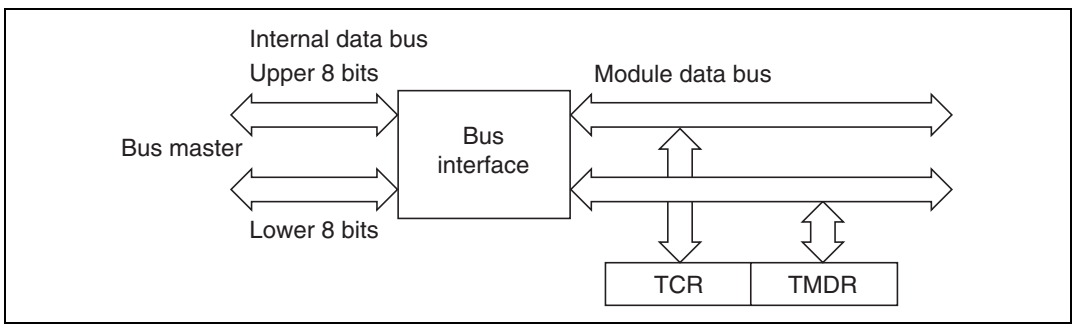

Figure 10.5 8-Bit Register Access Operation (Bus Master ↔ TCR, TMDR (16 Bit))

10.4 Operation

10.4.1 Overview

The operation modes are described below.

Ordinary Operation: Each channel has a timer counter (TCNT) and general register (TGR). The TCNT is an upcounter and can also operate as a free-running counter, periodic counter or external event counter. General registers (TGR) can be used as output compare registers or input capture registers.

Synchronized Operation: The TCNT of a channel set for synchronized operation does a synchronized preset. When any TCNT of a channel operating in the synchronized mode is rewritten, the TCNTs of other channels are simultaneously rewritten as well. The timer synchronization bits of the TSYR registers of multiple channels set for synchronous operation can be set to clear the TCNTs simultaneously.

Buffer Operation: When TGR is an output compare register, the buffer register value of the corresponding channel is transferred to the TGR when a compare-match occurs. When TGR is an input capture register, the TCNT counter value is transferred to the TGR when an input capture occur simultaneously the value previously stored in the TGR is transferred to the buffer register.

Cascade Connection Operation: The channel 1 and channel 2 counters (TCNT1 and TCNT2) can be connected together to operate as a 32-bit counter.

PWM Mode: In PWM mode, a PWM waveform is output. The output level can be set by the TIOR register. Each TGR can be set for PWM waveform output with a duty cycle between 0% and 100%.

Phase Counting Mode: In phase counting mode, the phase differential between two clocks input from the channel 1 and channel 2 external clock input pins is detected and the TCNT counter operates as an up/down counter. In phase counting mode, the corresponding TCLK pins become clock inputs and TCNT functions as an up/down counter. It can be used as a two-phase encoder pulse input.

10.4.2 Basic Functions

Always select MTU external pin set function using the pin function controller (PFC).

Counter Operation: When a start bit (CST0 to CST2) in the timer start register (TSTR) is set to 1, the corresponding timer counter (TCNT) starts counting. There are two counting modes: a free-running mode and a periodic mode.

To select the counting operation (figure 10.6):

1. Set bits TPSC2 to TPSC0 in the TCR to select the counter clock. At the same time, set bits CKEG1 and CKEG0 in the TCR to select the desired edge of the input clock.
2. To operate as a periodic counter, set the CCLR2 to CCLR0 bits in the TCR to select TGR as a clearing source for the TCNT.
3. Set the TGR selected in step 2 as an output compare register using the timer I/O control register (TIOR).
4. Write the desired cycle value in the TGR selected in step 2.
5. Set the CST bit in the TSTR to 1 to start counting.

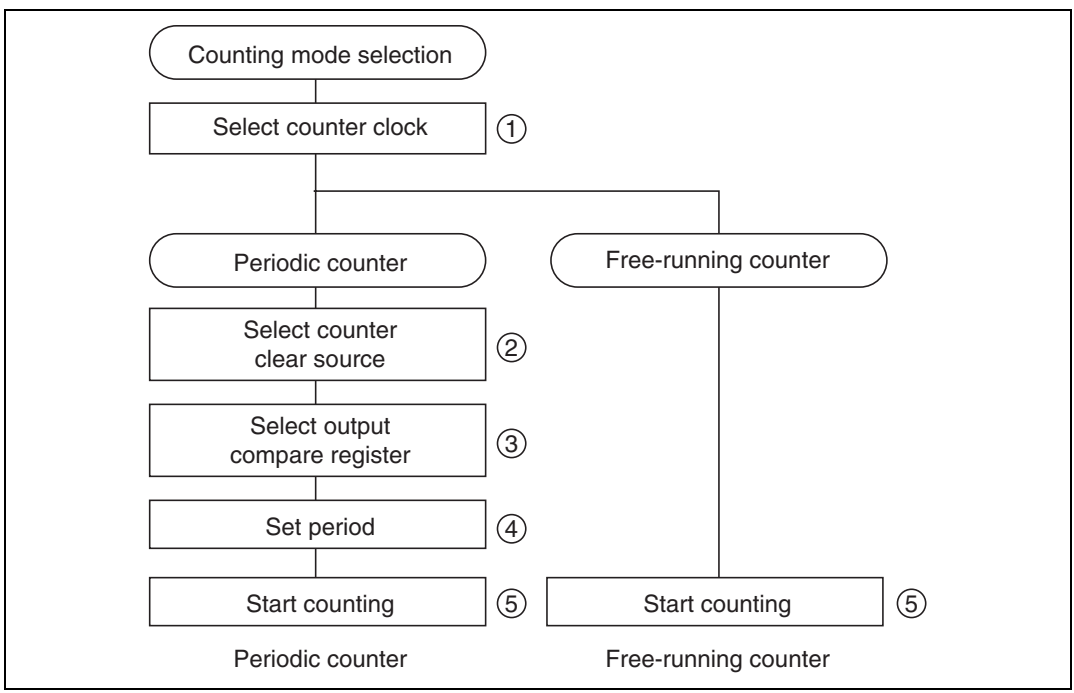

Figure 10.6 Procedure for Selecting the Counting Operation

Free-Running Counter Operation Example: A reset of the MTU timer counters (TCNT) leaves them all in the free-running mode. When a bit in the TSTR is set to 1, the corresponding timer counter operates as a free-running counter and begins to increment. When the count overflows from H'FFFF to H'0000, the TCFV bit in the timer status register (TSR) is set to 1. If the TCIEV bit in the timer's corresponding timer interrupt enable register (TIER) is set to 1, the MTU will make an interrupt request to the interrupt controller. After the TCNT overflows, counting continues from H'0000. Figure 10.7 shows an example of free-running counter operation.

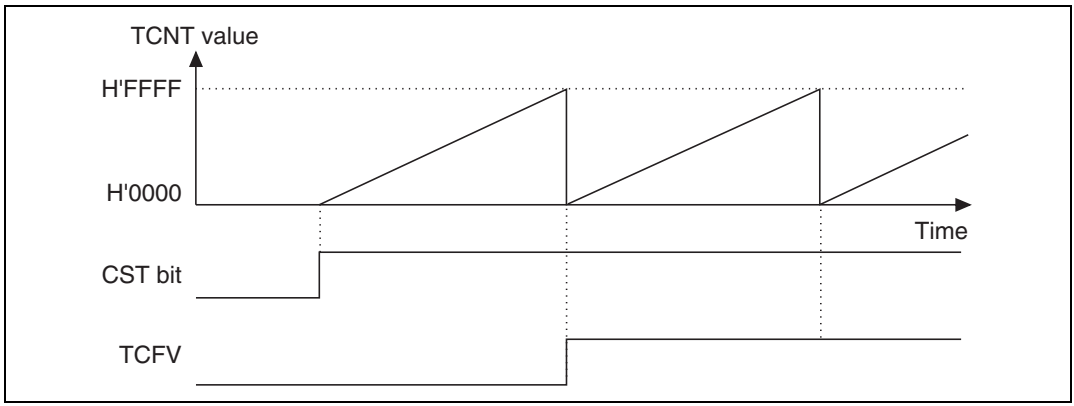

Figure 10.7 Free-Running Counter Operation

Periodic Counter Operation Example: Periodic counter operation is obtained for a given channel's TCNT by selecting compare-match as a TCNT clear source. Set the TGR register for period setting to output compare register and select counter clear upon compare-match using the CCLR2 to CCLR0 bits of the timer control register (TCR). After these settings, the TCNT begins incrementing as a periodic counter when the corresponding bit of TSTR is set to 1. When the count matches the TGR register value, the TGF bit in the TSR is set to 1 and the counter is cleared to H'0000. If the TGIE bit of the corresponding TIER is set to 1 at this point, the MTU will make an interrupt request to the interrupt controller. After the compare-match, TCNT continues counting from H'0000. Figure 10.8 shows an example of periodic counting.

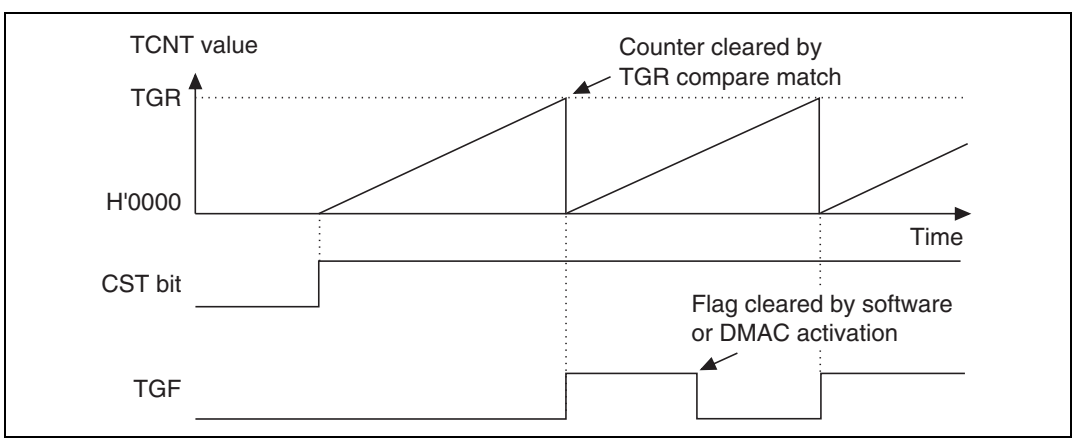

Figure 10.8 Periodic Counter Operation

Compare-Match Waveform Output Function: The MTU can output 0 level, 1 level, or toggle output from the corresponding output pins upon compare-matches.

Procedure for selecting the compare-match waveform output operation (figure 10.9):

1. Set the TIOR to select 0 output or 1 output for the initial value, and 0 output, 1 output, or toggle output for compare-match output. The TIOC pin will output the set initial value until the first compare-match occurs.
2. Set a value in the TGR to select the compare-match timing.
3. Set the CST bit in the TSTR to 1 to start counting.

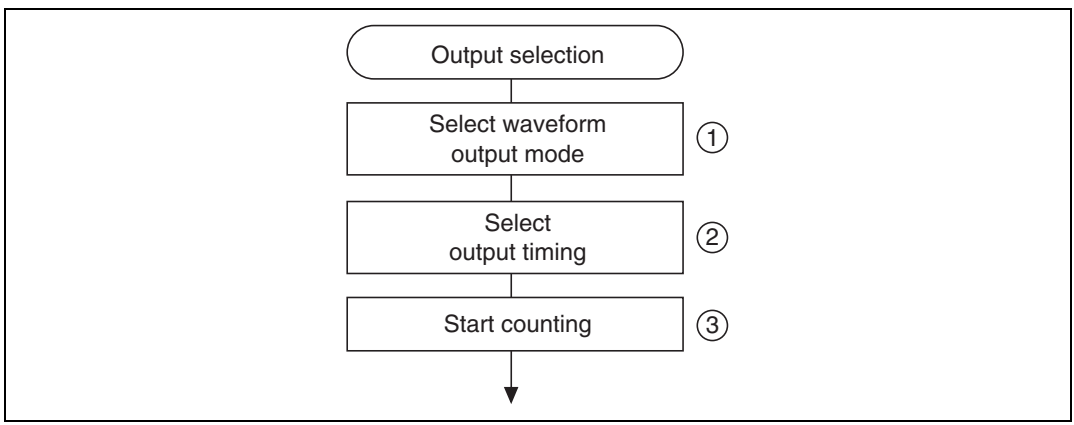

Figure 10.9 Procedure for Selecting Compare Match Waveform Output Operation

Waveform Output Operation (0 Output/1 Output): Figure 10.10 shows 0 output/1 output. In the example, TCNT is a free-running counter, 1 is output upon compare-match A and 0 is output upon compare-match B. When the pin level matches the set level, the pin level does not change.

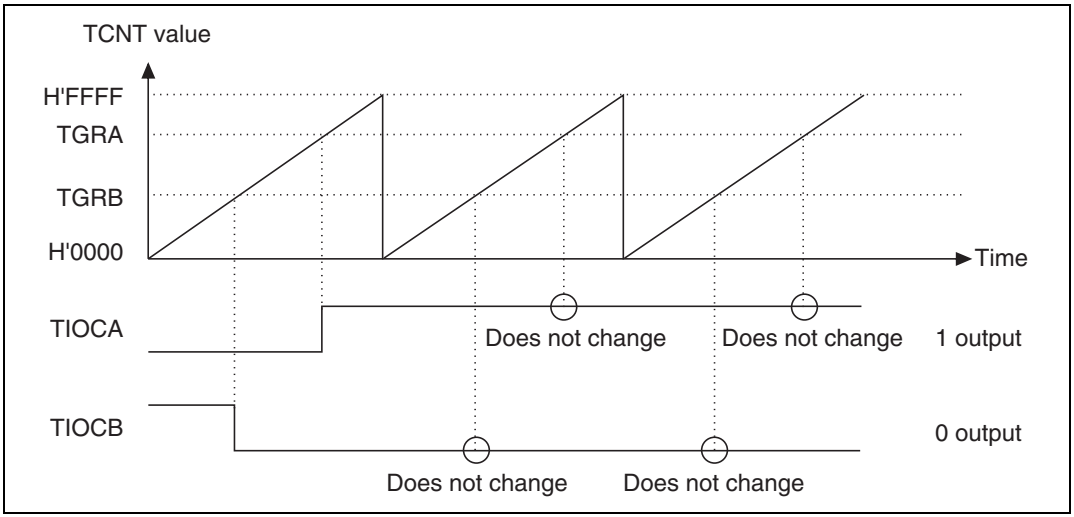

Figure 10.10 Example of 0 Output/1 Output

Waveform Output Operation (Toggle Output): Figure 10.11 shows the toggle output. In the example, the TCNT operates as a periodic counter cleared by compare-match B, with toggle output at both compare-match A and compare-match B.

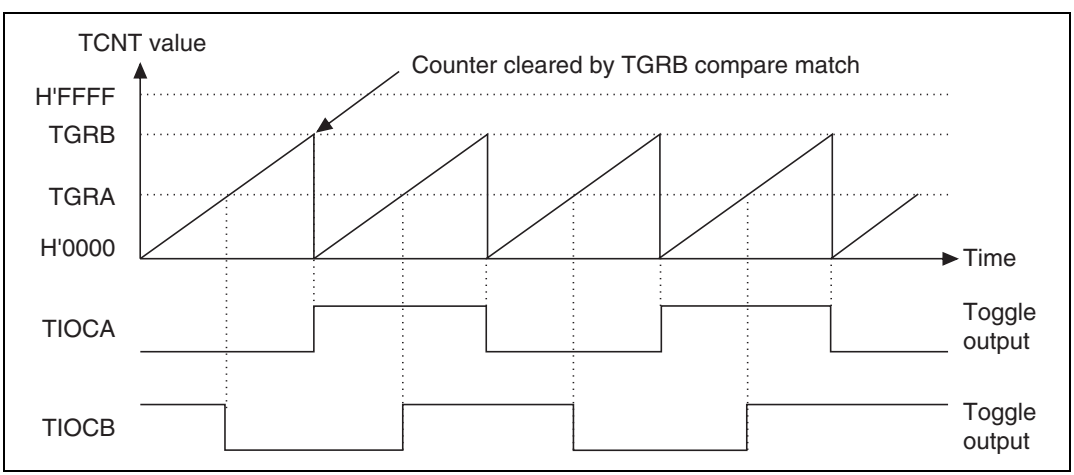

Figure 10.11 Example of Toggle Output

Input Capture Function: In the input capture mode, the TCNT value is transferred into the TGR register when the input edge is detected at the input capture/output compare pin (TIOC).

Detection can take place on the rising edge, falling edge, or both edges. Channels 0 and 1 can use other channel counter input clocks or compare-match signals as input capture sources.

The procedure for selecting the input capture operation (figure 10.12) is:

1. Set the TIOR to select the input capture function of the TGR, then select the input capture source, and rising edge, falling edge, or both edges as the input edge.
2. Set the CST bit in the TSTR to 1 to start the TCNT counting.

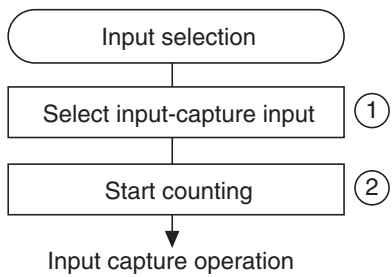

Figure 10.12 Procedure for Selecting Input Capture Operation

Input Capture Operation: Figure 10.13 shows input capture. The falling edge of TIOCB and both edges of TIOCA are selected as input capture input edges. In the example, TCNT is set to clear at the input capture of the TGRB register.

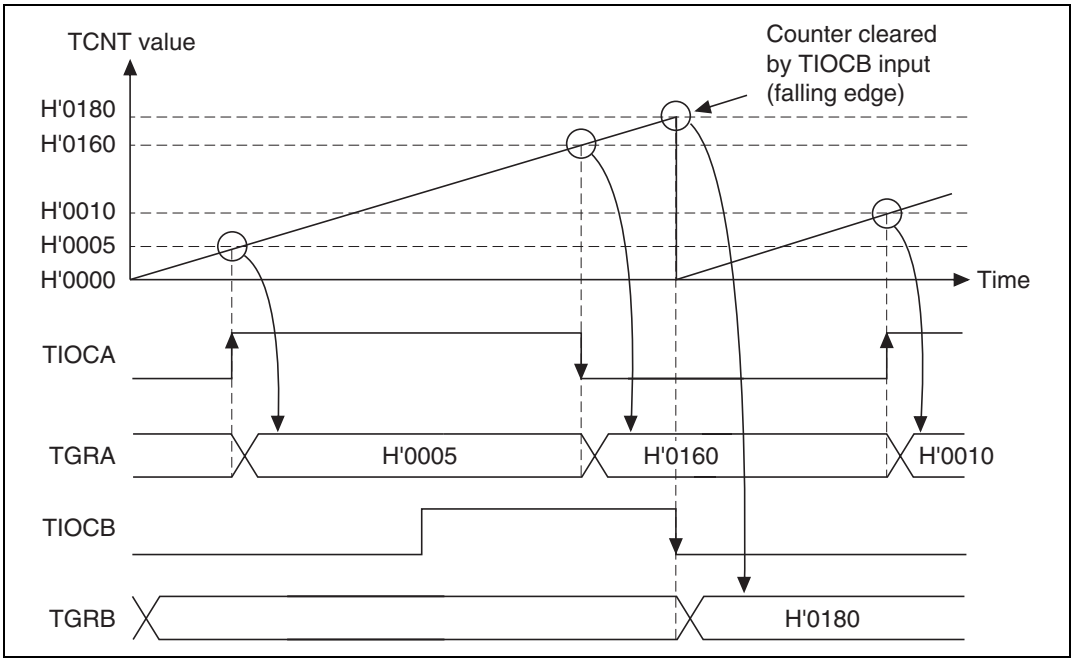

Figure 10.13 Input Capture Operation

10.4.3 Synchronous Operation

In the synchronizing mode, two or more timer counters can be rewritten simultaneously (synchronized preset). Multiple timer counters can also be cleared simultaneously using TCR settings (synchronized clear).

The synchronizing mode can increase the number of TGR registers for a single time base. All three channels can be set for synchronous operation.

Procedure for Selecting the Synchronizing Mode (Figure 10.14):

1. Set 1 in the SYNC bit of the timer synchro register (TSYR) to use the corresponding channel in the synchronizing mode.
2. When a value is written in the TCNT in any of the synchronized channels, the same value is simultaneously written in the TCNT in the other channels.
3. Set the counter to clear with output compare/input capture using bits CCLR2 to CCLR0 in the TCR.
4. Set the counter clear source to synchronized clear using the CCLR2 to CCLR0 bits of the TCR.
5. Set the CST bits for the corresponding channels in the TSTR to 1 to start counting in the TCNT.

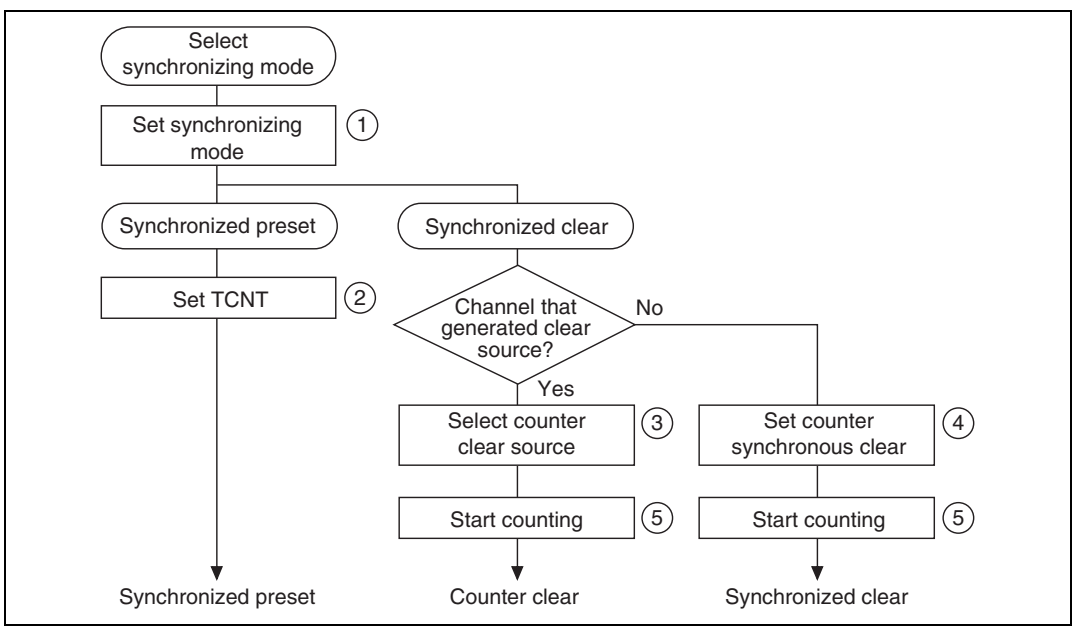

Figure 10.14 Procedure for Selecting Synchronizing Operation

Synchronized Operation: Figure 10.15 shows an example of synchronized operation. Channels 0, 1, and 2 are set to synchronized operation and PWM mode 1. Channel 0 is set for a counter clear upon compare-match with TGR0B. Channels 1 and 2 are set for synchronous counter clears by synchronous presets and TGR0B register compare-matches. Accordingly, a three-phase PWM waveform with the data set in the TGR0B register as its PWM period is output from the TIOC0A, TIOC1A, and TIOC2A pins.

See section 10.4.6, PWM Mode, for details on the PWM mode.

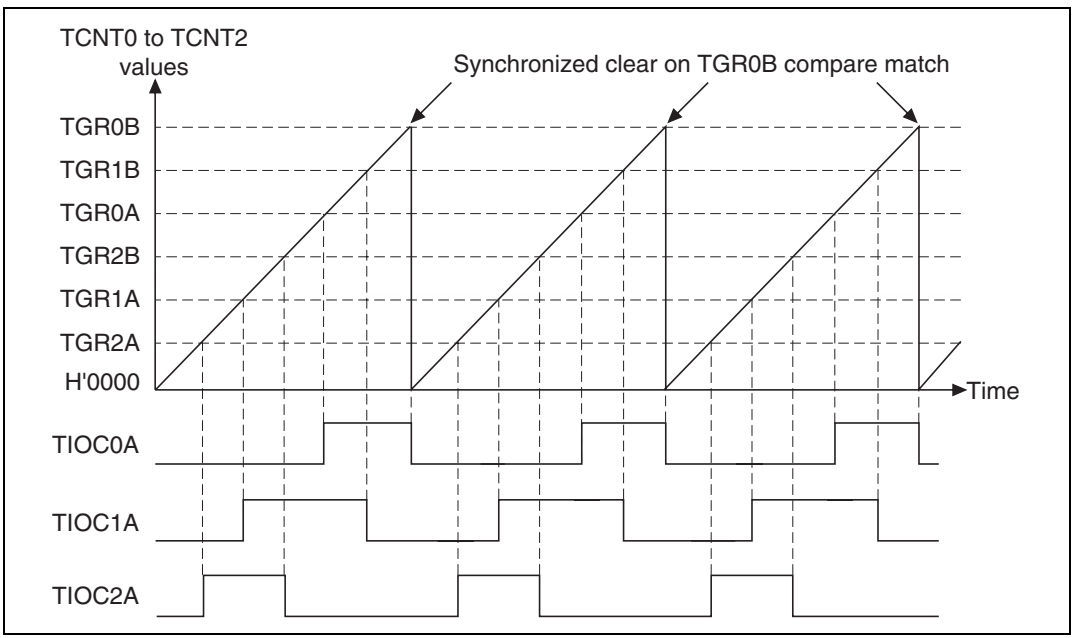

Figure 10.15 Synchronized Operation Example

10.4.4 Buffer Operation

Buffer operation is a function of channels 0, 3, and 4. TGRC and TGRD can be used as buffer registers. Table 10.5 shows the register combinations for buffer operation.

Table 10.5 Register Combinations

Channel	General Register	Buffer Register
0	TGR0A	TGR0C
	TGR0B	TGR0D

The buffer operation differs, depending on whether the TGR has been set as an input capture register or an output compare register.

When TGR Is an Output Compare Register: When a compare-match occurs, the corresponding channel buffer register value is transferred to the general register. Figure 10.16 shows an example.

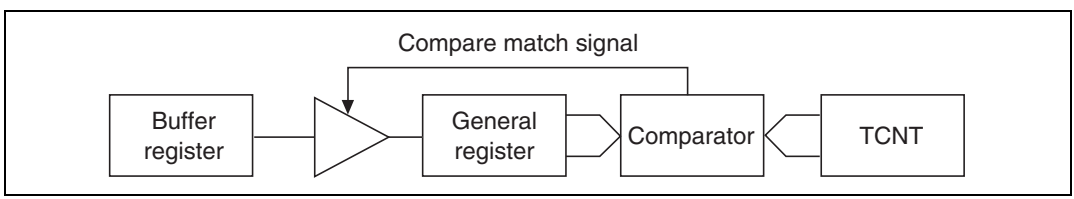

Figure 10.16 Compare Match Buffer Operation

When TGR Is an Input Capture Register: When an input capture occurs, the timer counter (TCNT) value is transferred to the general register (TGR), and the value that had been held up to that time in the TGR is transferred to the buffer register (figure 10.17).

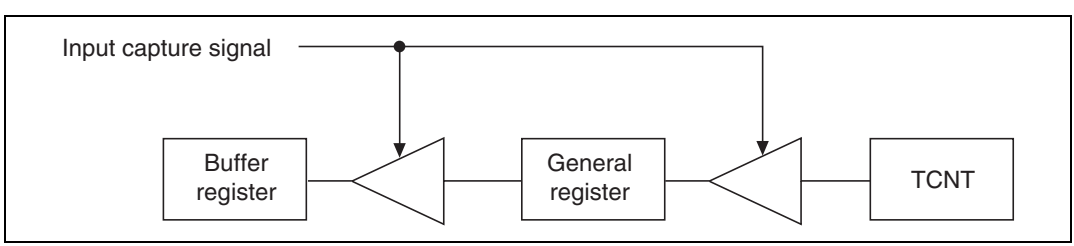

Figure 10.17 Input Capture Buffer Operation

Procedure for Setting Buffer Mode (Figure 10.18):

1. Use the timer I/O control register (TIOR) to set the TGR as either an input capture or output compare register.
2. Use the timer mode register (TMDR) BFA, and BFB bits to set the TGR for buffer mode.
3. Set the CST bit in the TSTR to 1 to start the count operation.

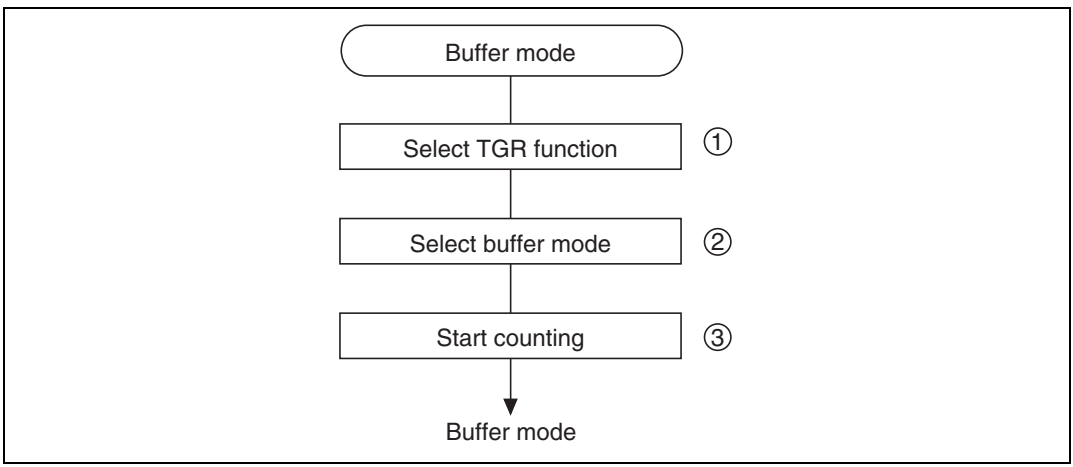

Figure 10.18 Buffer Operation Setting Procedure

Buffer Operation Examples—when TGR Is an Output Compare Register: Figure 10.19 shows an example of channel 0 set to PWM mode 1, and the TGRA and TGRC registers set for buffer operation.

The TCNT counter is cleared by a compare-match B, and the output is a 1 upon compare-match A and 0 output upon compare-match B. Because buffer mode is selected, a compare-match A changes the output, and the buffer register TGRC value is simultaneously transferred to the general register TGRA. This operation is repeated with each occurrence of a compare-match A.

See section 10.4.6, PWM Mode, for details on the PWM mode.

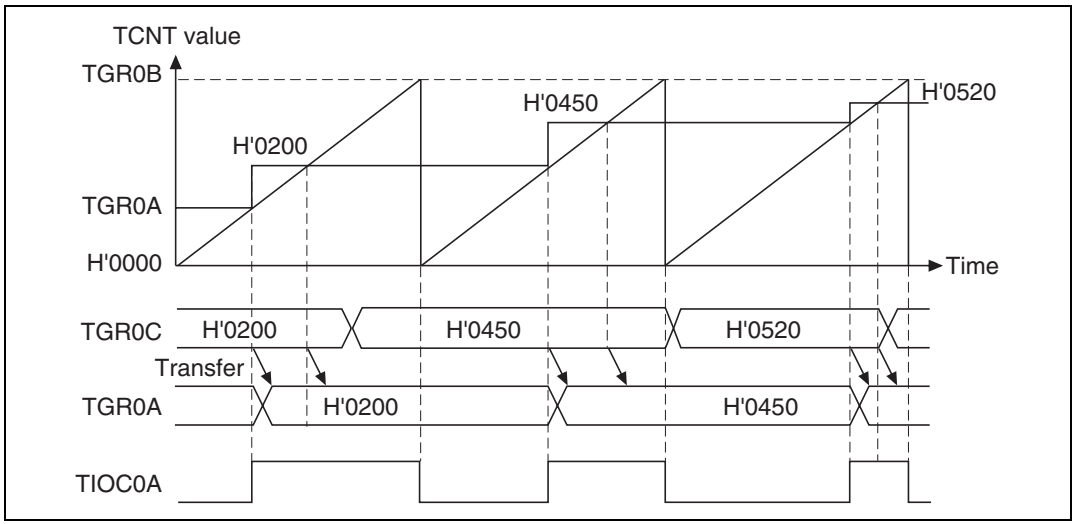

Figure 10.19 Buffer Operation Example (Output Compare Register)

Buffer Operation Examples—when TGR Is an Input Capture Register: Figure 10.20 shows an example of TGRA set as an input capture register with the TGRA and TGRC registers set for buffer operation.

The TCNT counter is cleared by a TGRA register input capture, and the TIOCA pin input capture input edge is selected as both rising and falling edge. Because buffer mode is selected, an input capture A causes the TCNT counter value to be stored in the TGRA register, and the value that was stored in the TGRA up until that time is simultaneously transferred to the TGRC register.

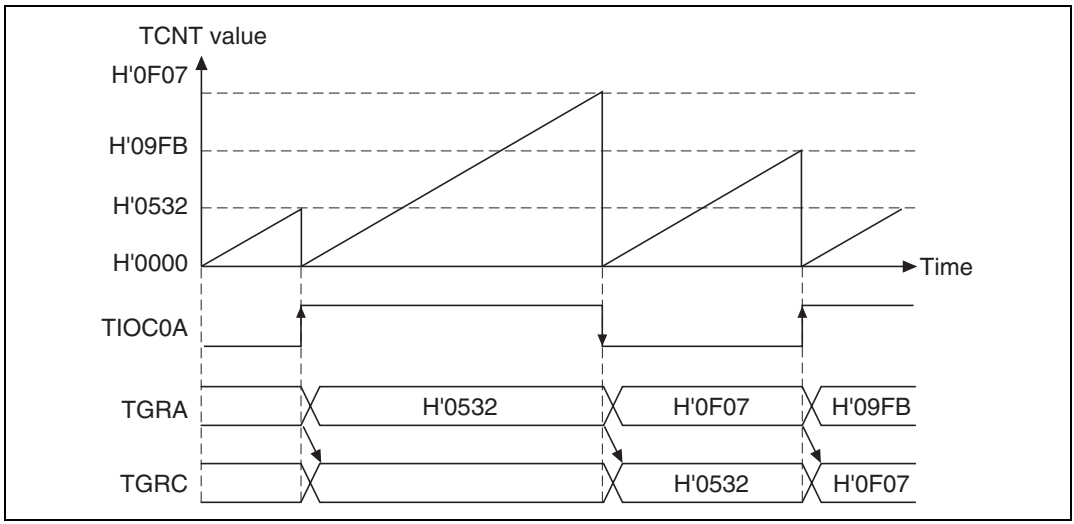

Figure 10.20 Buffer Operation Example (Input Capture Register)

10.4.5 Cascade Connection Mode

Cascade connection mode is a function that connects the 16-bit counters of two channels together to act as a 32-bit counter.

This function operates by using the TPSC2 to TPSC0 bits of the TCR register to set the channel 1 counter clock to count by TCNT2 counter overflow/underflow.

Note: When channel 1 is set to phase counting mode, the counter clock settings become ineffective.

Table 10.6 shows the cascade connection combinations.

Table 10.6 Cascade Connection Combinations

Combination	Upper 16 Bits	Lower 16 Bits
Channel 1, channel 2	TCNT1	TCNT2

Procedure for Setting Cascade Connection Mode (Figure 10.21):

1. Set the TPSC2 to TPSC 0 bits of the channel 1 timer control register (TCR) to B'111 to select "count by TCNT2 overflow/underflow."
2. Set the CST bits corresponding to the upper and lower 16 bits in the TSTR to 1 to start the count operation.

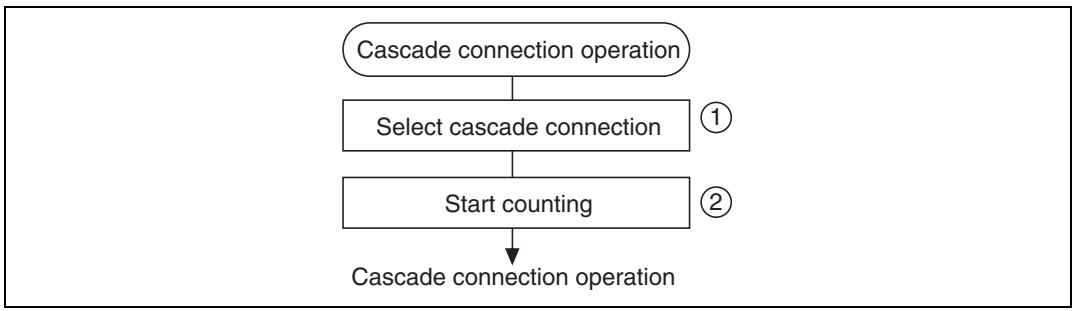

Figure 10.21 Procedure for Selecting Cascade Connection Mode

Cascade Connection Operation Examples—Phase Counting Mode: Figure 10.22 shows an example of operation when the TCNT1 counter is set to count on TCNT2 overflow/underflow and channel 2 is set to phase counting mode.

The TCNT1 counter increments with a TCNT2 counter overflow and decrements with a TCNT2 underflow.

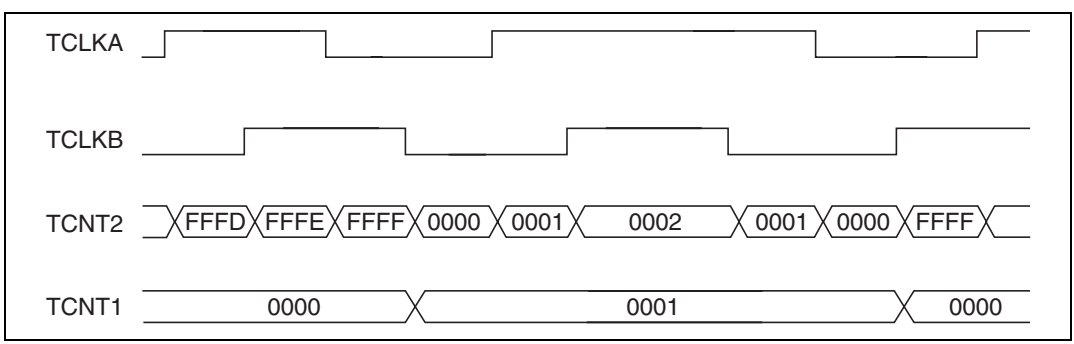

Figure 10.22 Cascade Connection Operation Example (Phase Counting Mode)

10.4.6 PWM Mode

PWM mode outputs the various PWM waveforms from output pins. Output levels of 0 output, 1 output, or toggle output can be selected as the output level for the compare-match of each TGR.

A period can be set for a register by using the TGR compare-match as a counter clear source. All channels can be independently set to PWM mode. Synchronous operation is also possible.

There are two PWM modes:

- PWM mode 1

  Generates PWM output using the TGRA and TGRB registers, and TGRC and TGRD registers as pairs. The initial output values are those established in the TGRA and TGRC registers. When the values set in TGR registers being used as a pair are equal, output values will not change even if a compare-match occurs.

  A maximum of four-phase PWM output is possible for PWM mode 1.
- PWM mode 2

  Generates PWM output using one TGR register as a period register and another as a duty cycle register. The output value of each pin upon a counter clear is the initial value established by the TIOR register. When the values set in the period register and duty register are equal, output values will not change even if a compare-match occurs.

Table 10.7 lists the combinations of PWM output pins and registers.

Table 10.7 Combinations of PWM Output Pins and Registers

		Output Pin	
Channel	**Register**	**PWM Mode 1**	**PWM Mode 2**
0 (AB pair)	TGR0A TGR0B	TIOC0A	TIOC 0A TIOC 0B
0 (CD pair)	TGR0C TGR0D	TIOC0C	TIOC 0C TIOC 0D
1	TGR1A TGR1B	TIOC1A	TIOC 1A TIOC 1B
2	TGR2A TGR2B	TIOC2A	TIOC 2A TIOC 2B

Note: PWM output of the period setting TGR is not possible in PWM mode 2.

Procedure for Selecting the PWM Mode (Figure 10.23):

1. Set bits TPSC2 to TPSC0 in the TCR to select the counter clock source. At the same time, set bits CKEG1 and CKEG0 in the TCR to select the desired edge of the input clock.
2. Set bits CCLR2 to CCLR0 in the TCR to select the TGR to be used as a counter clear source.
3. Set the period in the TGR selected in step 2, and the duty cycle in another TGR.
4. Using the timer I/O control register (TIOR), set the TGR selected in step 3 to act as an output compare register, and select the initial value and output value.
5. Set the MD3 to MD 0 bits in TMDR to select the PWM mode.
6. Set the CST bit in the TSTR to 1 to let the TCNT start counting.

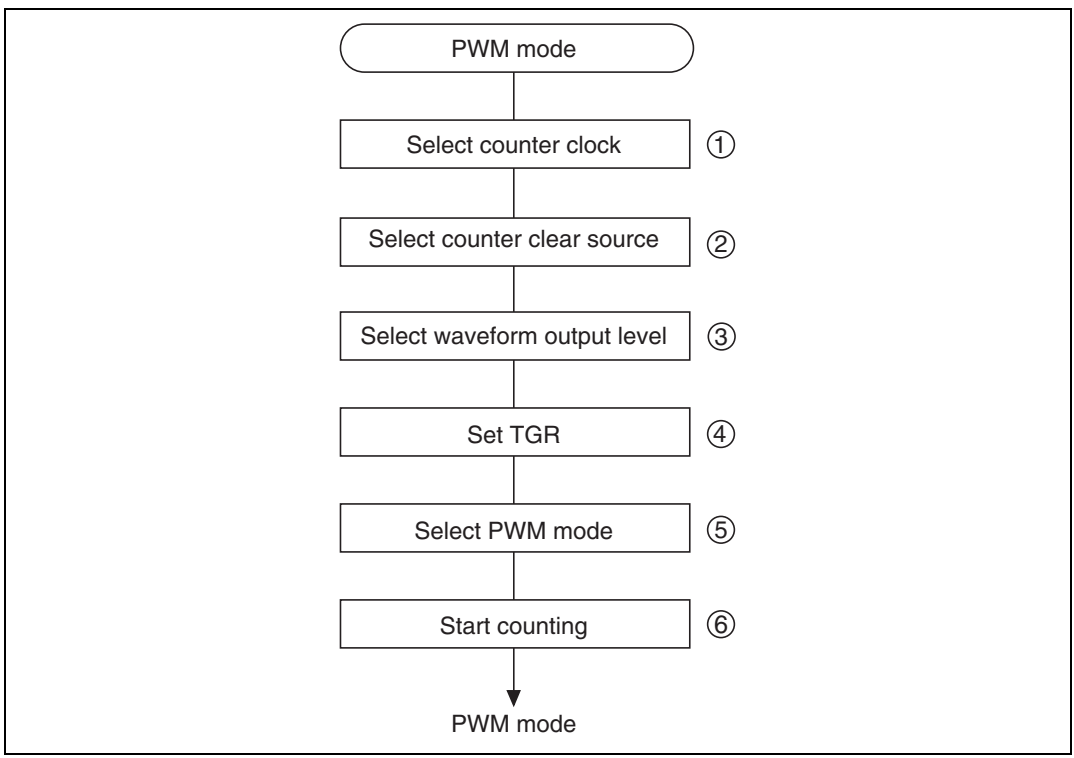

Figure 10.23 Procedure for Selecting the PWM Mode

PWM Mode Operation Examples—PWM Mode 1 (Figure 10.24): A TGRA register compare-match is used as a TCNT counter clear source, the TGRA register initial output value and output compare output value are both 0, and the TGRB register output compare output value is a 1. In this example, the value established in the TGRA register becomes the period and the value established in the TGRB register becomes the duty cycle.

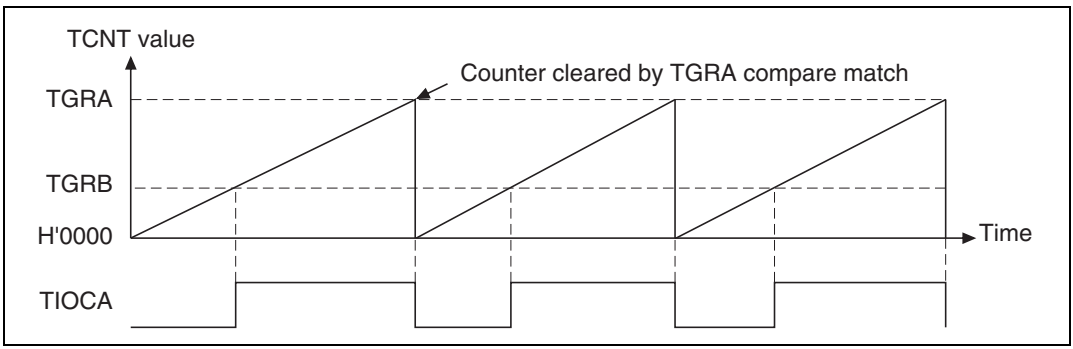

Figure 10.24 PWM Mode Operation Example (Mode 1)

PWM Mode Operation Examples—PWM Mode 2 (Figure 10.25): Channels 0 and 1 are set for synchronous operation, TGR1B register compare-match is used as a TCNT counter clear source, the other TGR register initial output value is 0 and output compare output value is 1, and a 5-phase PWM waveform is output. In this example, the value established in the TGR1B register becomes the period and the value established in the other TGR register becomes the duty cycle.

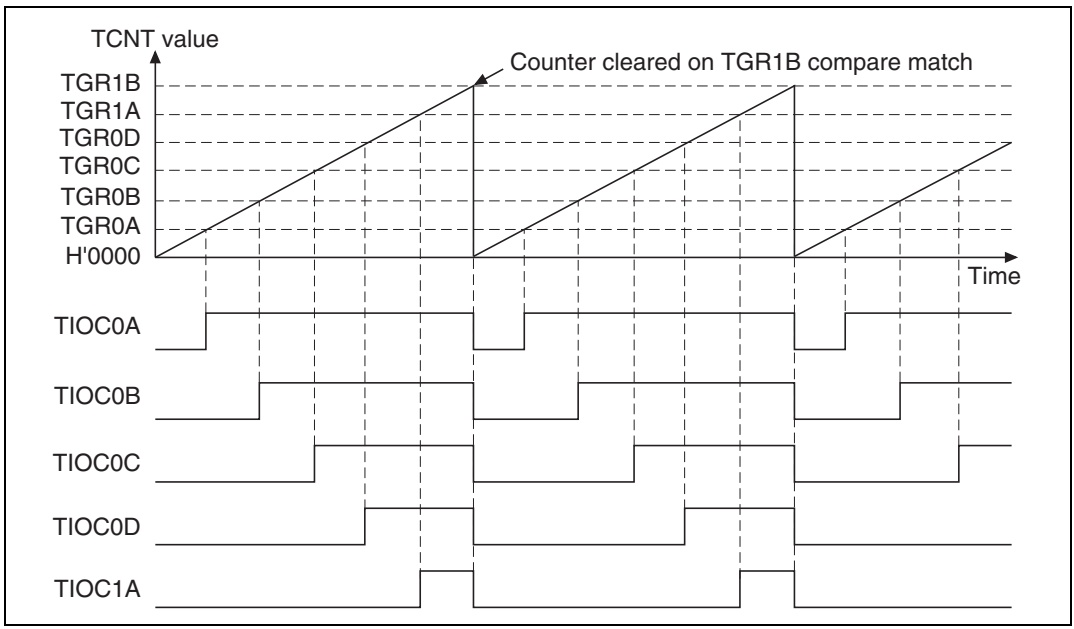

Figure 10.25 PWM Mode Operation Example (Mode 2)

0% Duty Cycle: Figure 10.26 shows an example of a 0% duty cycle PWM waveform output in PWM mode.

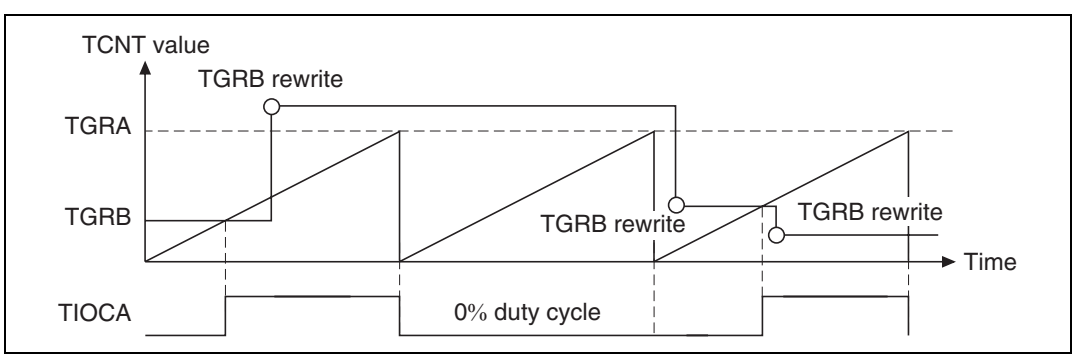

Figure 10.26 PWM Mode Operation Example (0% Duty Cycle)

100% Duty Cycle: Figure 10.27 shows an example of a 100% duty cycle PWM waveform output in PWM mode.

In PWM mode, when setting cycle = duty cycle the output waveform does not change, nor is there a change of waveform for the first pulse immediately after clearing the counter.

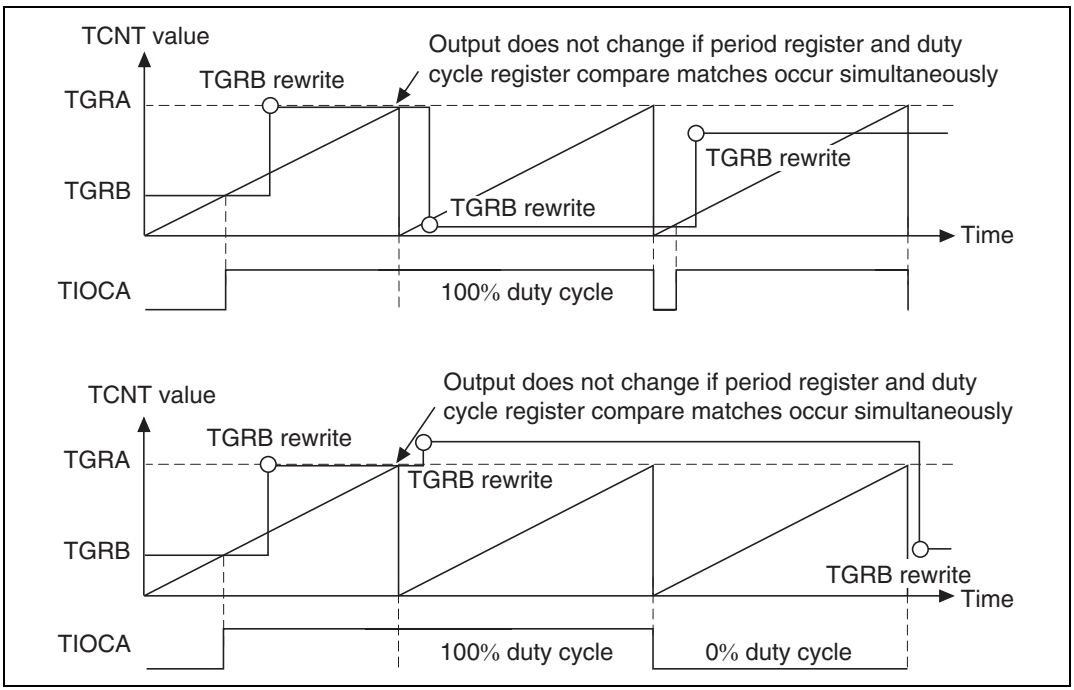

Figure 10.27 PWM Mode Operation Example (100% Duty Cycle)

10.4.7 Phase Counting Mode

The phase counting mode detects the phase differential of two external clock inputs and counts the TCNT counter up or down. This mode can be set for channels 1 and 2.

When set in the phase counting mode, an external clock is selected for the counter input clock, regardless of the settings of the TPSC2 to TPSC0 bits of TCR or the CKEG1 and CKEG0 bits. TCNT also becomes an up/down counter. Since the TCR CCLR1/CCLR0 bits, TIOR, TIER, and TGR functions are all enabled, input capture and compare-match functions and interrupt sources can be used.

When the TCNT counter is incrementing, an overflow sets the TSR register TCFV (overflow flag). When it is decrementing, an underflow sets the TCFU (underflow flag).

The TSR register TCFD bit is a count direction flag. Read the TCFD flag to confirm whether the TCNT is incrementing or decrementing.

Table 10.8 shows the correspondence between channels and external clock pins.

Table 10.8 Phase Counting Mode Clock Input Pins

Channel	A Phase Input Pin	B Phase Input Pin
1	TCLKA	TCLKB
2	TCLKC	TCLKD

Procedure for Selecting the Phase Counting Mode (Figure 10.28):

1. Set the MD3 to MD0 bits of the timer mode register (TMDR) to select the phase counting mode.
2. Set the CST bit of the timer start register (TSTR) to 1 to start the count.

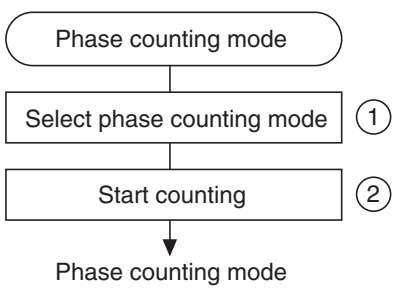

Figure 10.28 Procedure for Selecting the Phase Counting Mode

Phase Counting Operation Examples: The phase counting mode uses the phase difference between two external clocks to increment/decrement the TCNT counter. There are 4 modes, depending on the count conditions.

Phase Counting Mode 1: Figure 10.29 shows an example of phase counting mode 1 operation. Table 10.9 lists the up counting and down counting conditions for the TCNT.

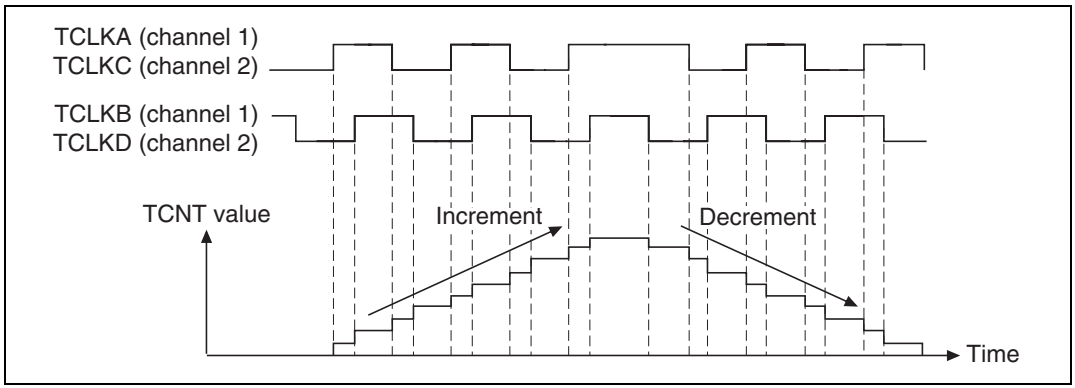

Figure 10.29 Phase Counting Mode 1 Operation

Table 10.9 Phase Count Mode 1 Up/Down Counting Conditions

TCLKA (Channel 1) TCLKC (Channel 2)	TCLKB (Channel 1) TCLKD (Channel 2)	Operation
1 (high level)	Rising edge	Increment
0 (low level)	Falling edge	
Rising edge	0 (low level)	
Falling edge	1 (high level)	
1 (high level)	Falling edge	Decrement
0 (low level)	Rising edge	
Rising edge	1 (high level)	
Falling edge	0 (low level)	

Phase Count Mode 2: Figure 10.30 shows an example of phase counting mode 2 operation. Table 10.10 lists the up counting and down counting conditions for the TCNT.

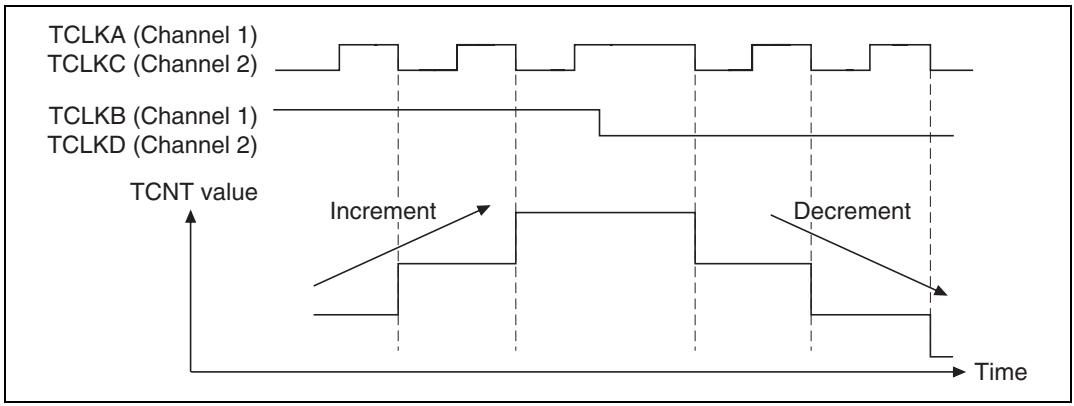

Figure 10.30 Phase Counting Mode 2 Operation

Table 10.10 Phase Count Mode 2 Up/Down Counting Conditions

TCLKA (Channel 1) TCLKC (Channel 2)	TCLKB (Channel 1) TCLKD (Channel 2)	Operation
1 (high level)	Rising edge	Does not count (don't care)
0 (low level)	Falling edge	
Rising edge	0 (low level)	
Falling edge	1 (high level)	Increment
1 (high level)	Falling edge	Does not count (don't care)
0 (low level)	Rising edge	
Rising edge	1 (high level)	
Falling edge	0 (low level)	Decrement

Phase Count Mode 3: Figure 10.31 shows an example of phase counting mode 3 operation. Table 10.11 lists the up counting and down counting conditions for the TCNT.

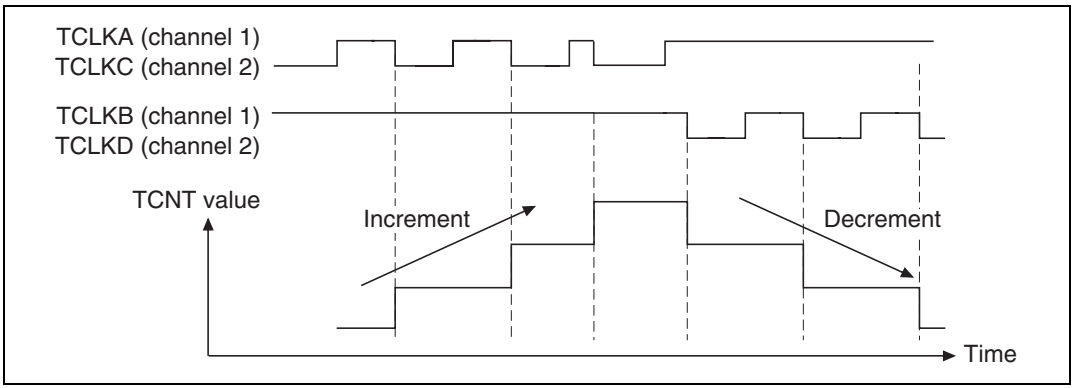

Figure 10.31 Phase Counting Mode 3 Operation

Table 10.11 Phase Count Mode 3 Up/Down Counting Conditions

TCLKA (Channel 1) TCLKC (Channel 2)	TCLKB (Channel 1) TCLKD (Channel 2)	Operation
1 (high level)	Rising edge	Does not count (don't care)
0 (low level)	Falling edge	
Rising edge	0 (low level)	
Falling edge	1 (high level)	Increment
1 (high level)	Falling edge	Decrement
0 (low level)	Rising edge	Does not count (don't care)
Rising edge	1 (high level)	
Falling edge	0 (low level)	

Phase Count Mode 4: Figure 10.32 shows an example of phase counting mode 4 operation. Table 10.12 lists the up counting and down counting conditions for the TCNT.

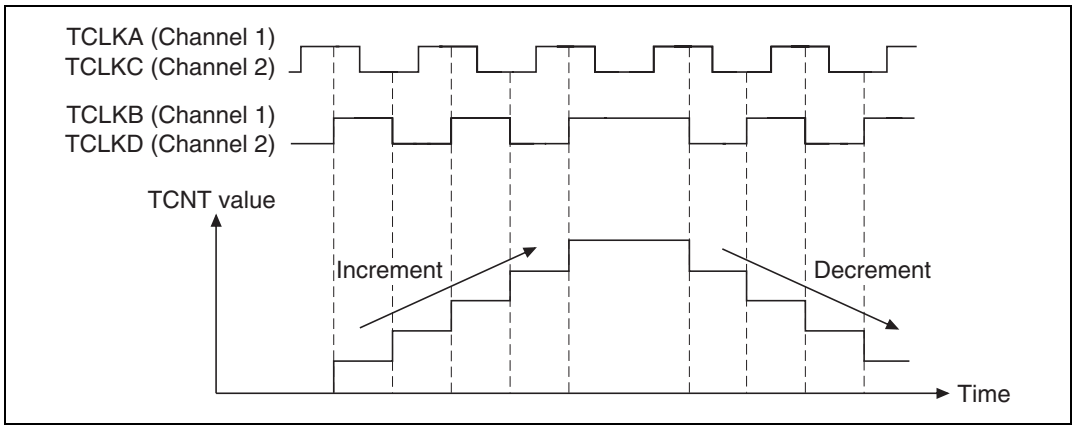

Figure 10.32 Phase Counting Mode 4 Operation

Table 10.12 Phase Count Mode 4 Up/Down Counting Conditions

TCLKA (Channel 1) TCLKC (Channel 2)	TCLKB (Channel 1) TCLKD (Channel 2)	Operation
1 (high level)	Rising edge	Increment
0 (low level)	Falling edge	
Rising edge	0 (low level)	Does not count (don't care)
Falling edge	1 (high level)	
1 (high level)	Falling edge	Decrement
0 (low level)	Rising edge	
Rising edge	1 (high level)	Does not count (don't care)
Falling edge	0 (low level)	

Phase Counting Mode Application Example: Figure 10.33 shows an example where channel 1 is set to phase counting mode and is teamed with channel 0 to input a two-phase encoder pulse for a servo motor to accurately detect position and speed.

Channel 1 is set to phase counting mode 1, and the encoder pulse A phase and B phase are input to the TCLKA and TCLKB pins.

Channel 0 is set so that the TCNT counter is cleared on a TGR0C register compare-match, and the TGR0A and TGR0C registers are used with the compare-match function to establish the speed control and position control periods. The TGR0B register is used with the input capture function,

and the TGR0B and TGR0D registers are employed for buffer operation. The channel 1 counter input clock is used as the TGR0B register input capture source, and a pulse width of four times the 2-phase encoder pulse is detected.

The channel 1 TGR1A and TGR1B registers are set for the input capture function, the channel 0 TGR0A and TGR0C register compare-match is used as an input capture source, and all of the control period increment and decrement values are stored. This procedure enables the accurate detection of position and speed.

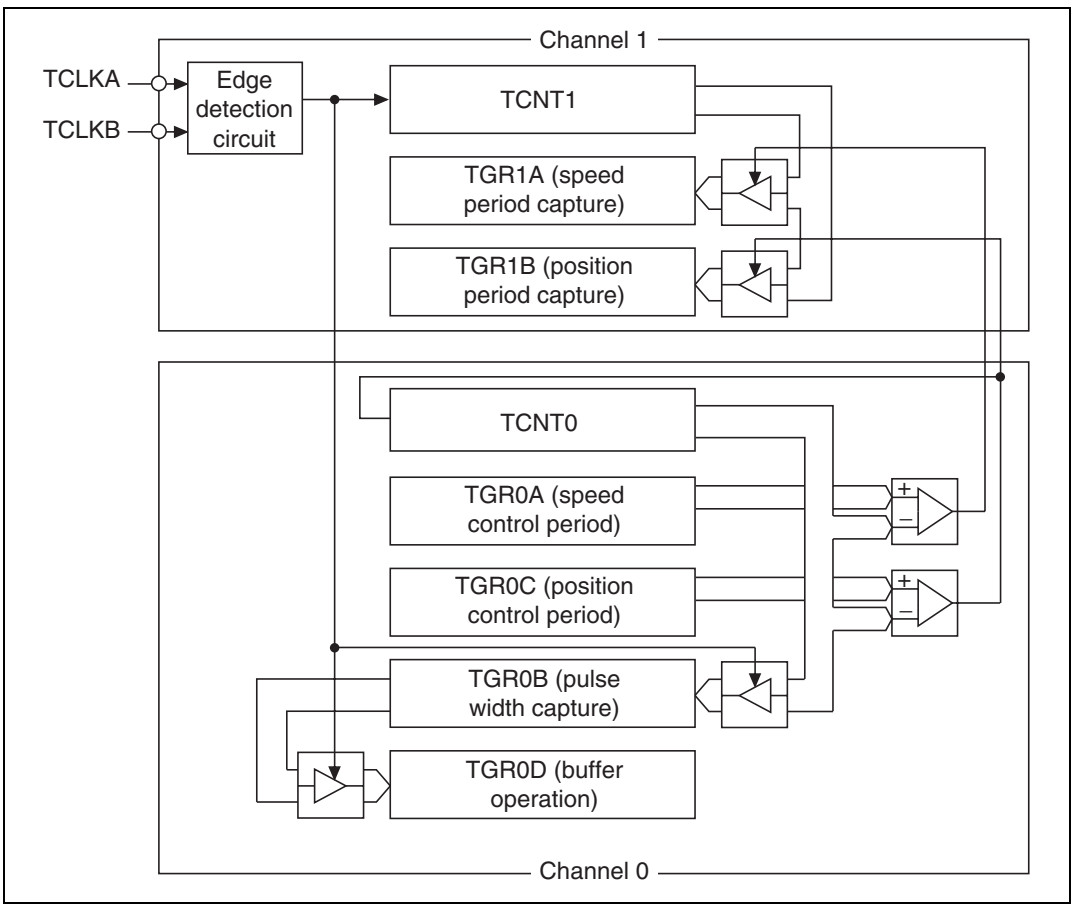

Figure 10.33 Phase Count Mode Application Example

10.5 Interrupts

10.5.1 Interrupt Sources and Priority Ranking

The MTU has three interrupt sources: TGR register compare-match/input captures, TCNT counter overflows and TCNT counter underflows. Because each of these three types of interrupts are allocated its own dedicated status flag and enable/disable bit, the issuing of interrupt request signals to the interrupt controller can be independently enabled or disabled.

When an interrupt source is generated, the corresponding status flag in the timer status register (TSR) is set to 1. If the corresponding enable/disable bit in the timer input enable register (TIER) is set to 1 at this time, the MTU makes an interrupt request of the interrupt controller. The interrupt request is canceled by clearing the status flag to 0.

The channel priority order can be changed with the interrupt controller. The priority ranking within a channel is fixed. For more information, see section 6, Interrupt Controller.

Table 10.13 lists the MTU interrupt sources.

Input Capture/Compare Match Interrupts: If the TGIE bit of the timer input enable register (TIER) is already set to 1 when the TGF flag in the timer status register (TSR) is set to 1 by a TGR register input capture/compare-match of any channel, an interrupt request is sent to the interrupt controller. The interrupt request is canceled by clearing the TGF flag to 0. The MTU has 8 input capture/compare-match interrupts; four for channel 0, and two each for channels 1 and 2.

Overflow Interrupts: If the TCIEV bit of the TIER is already set to 1 when the TCFV flag in the TSR is set to 1 by a TCNT counter overflow of any channel, an interrupt request is sent to the interrupt controller. The interrupt request is canceled by clearing the TCFV flag to 0. The MTU has three overflow interrupts, one for each channel.

Underflow Interrupts: If the TCIEU bit of the TIER is already set to 1 when the TCFU flag in the TSR is set to 1 by a TCNT counter underflow of any channel, an interrupt request is sent to the interrupt controller. The interrupt request is canceled by clearing the TCFU flag to 0. The MTU has two underflow interrupts, one each for channels 1 and 2.

Table 10.13 MTU Interrupt Sources

Channel	Interrupt Source	Description	DMAC Activation	Priority*
0	TGI0A	TGR0A input capture/compare-match	Yes	High
	TGI0B	TGR0B input capture/compare-match	No	
	TGI0C	TGR0C input capture/compare-match	No	
	TGI0D	TGR0D input capture/compare-match	No	
	TCI0V	TCNT0 overflow	No	
1	TGI1A	TGR1A input capture/compare-match	Yes	
	TGI1B	TGR1B input capture/compare-match	No	
	TCI1V	TCNT1 overflow	No	
	TCI1U	TCNT1 underflow	No	
2	TGI2A	TGR2A input capture/compare-match	Yes	
	TGI2B	TGR2B input capture/compare-match	No	
	TCI2V	TCNT2 overflow	No	
	TCI2U	TCNT2 underflow	No	Low

Note: * Indicates the initial status following reset. The ranking of channels can be altered using the interrupt controller.

10.5.2 DMAC Activation

The TGRA register input capture/compare-match interrupt of any channel can be used as a source to activate the on-chip DMAC. For details, refer to section 9, Direct Memory Access Controller (DMAC).

The MTU has three TGRA register input capture/compare-match interrupts, one for any channel, that can be used as DMAC activation sources.

10.5.3 A/D Converter Activation

The TGRA register input capture/compare-match of any channel can be used to activate the on-chip A/D converter.

If the TTGE bit of the TIER is already set to 1 when the TGFA flag in the TSR is set to 1 by a TGRA register input capture/compare-match of any of the channels, an A/D conversion start request is sent to the A/D converter. If the MTU conversion start trigger is selected at such a time on the A/D converter side when this happens, the A/D conversion starts.

The MTU has three TGRA register input capture/compare-match interrupts, one for each channel, that can be used as A/D converter activation sources.

10.6 Operation Timing

10.6.1 Input/Output Timing

TCNT Count Timing: Count timing for the TCNT counter with internal clock operation is shown in figure 10.34. Count timing with external clock operation (normal mode) is shown in figure 10.35, and figure 10.36 shows count timing with external clock operation (phase counting mode).

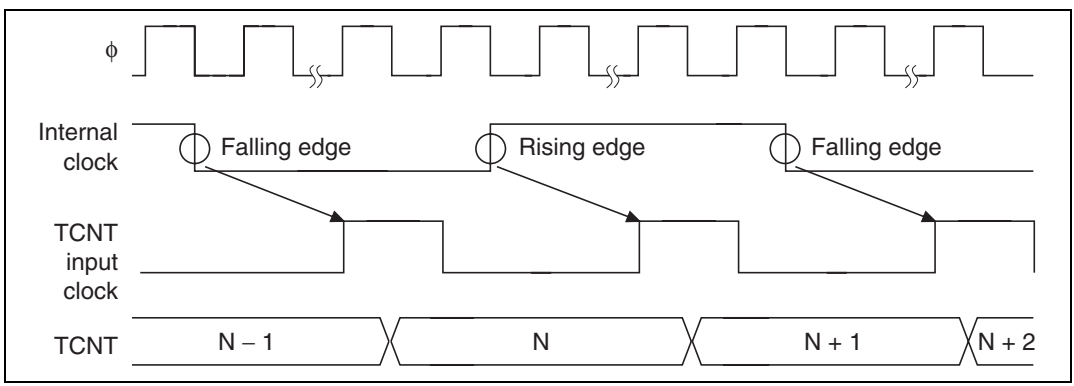

Figure 10.34 TCNT Count Timing during Internal Clock Operation

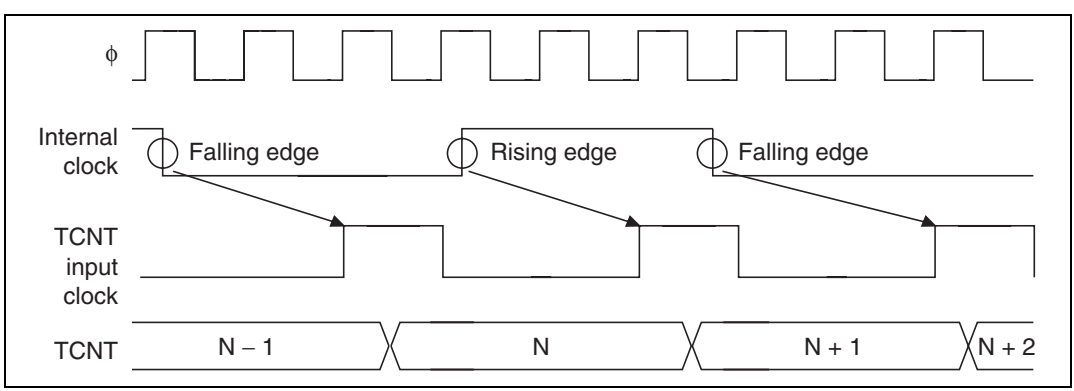

Figure 10.35 TCNT Count Timing during External Clock Operation (Normal Mode)

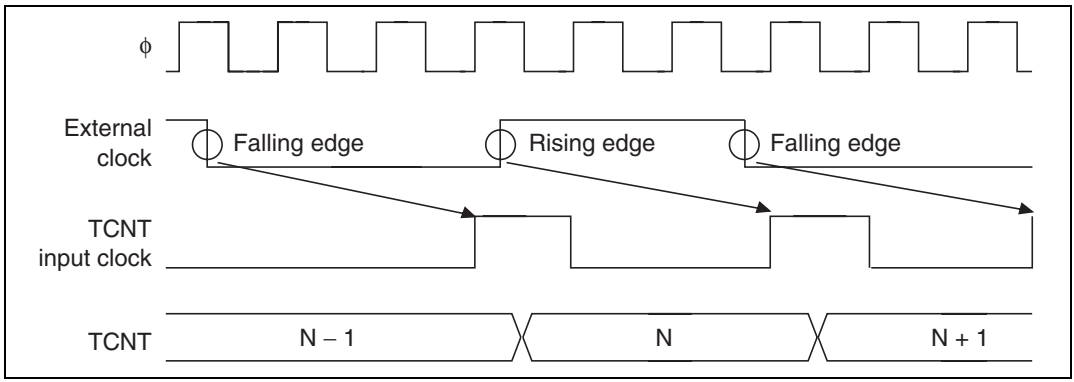

Figure 10.36 TCNT Count Timing during External Clock Operation (Phase Counting Mode)

Output Compare Output Timing: The compare-match signal is generated at the final state of TCNT and TGR matching. When a compare-match signal is issued, the output value set in TIOR is output to the output compare output pin (the TIOC pin). After TCNT and TGR matching, a compare-match signal is not issued until immediately before the TCNT input clock.

Output compare output timing (normal mode and PWM mode) is shown in figure 10.37.

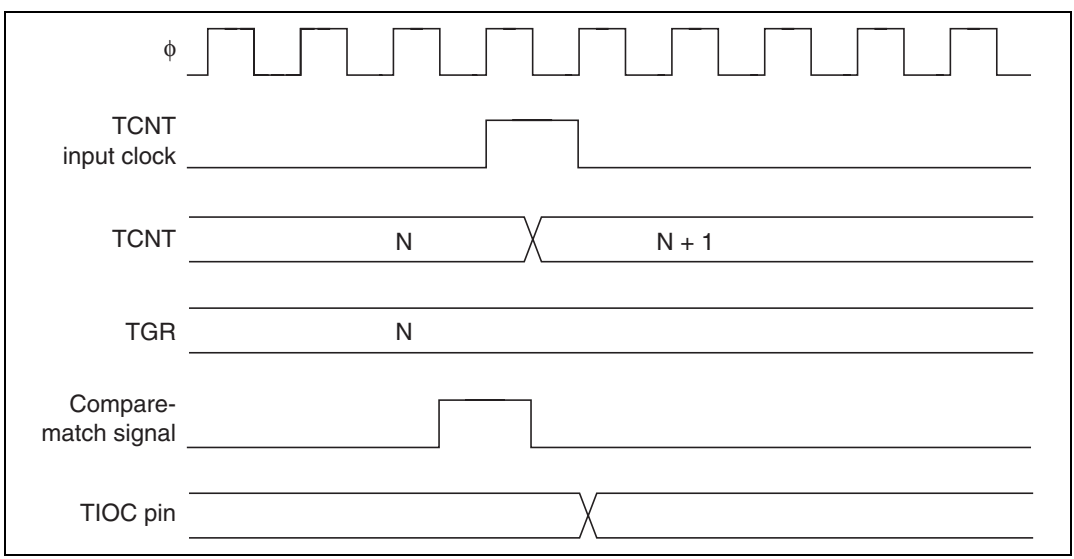

Figure 10.37 Output Compare Output Timing (Normal Mode/PWM Mode)

Input Capture Signal Timing: Figure 10.38 illustrates input capture timing.

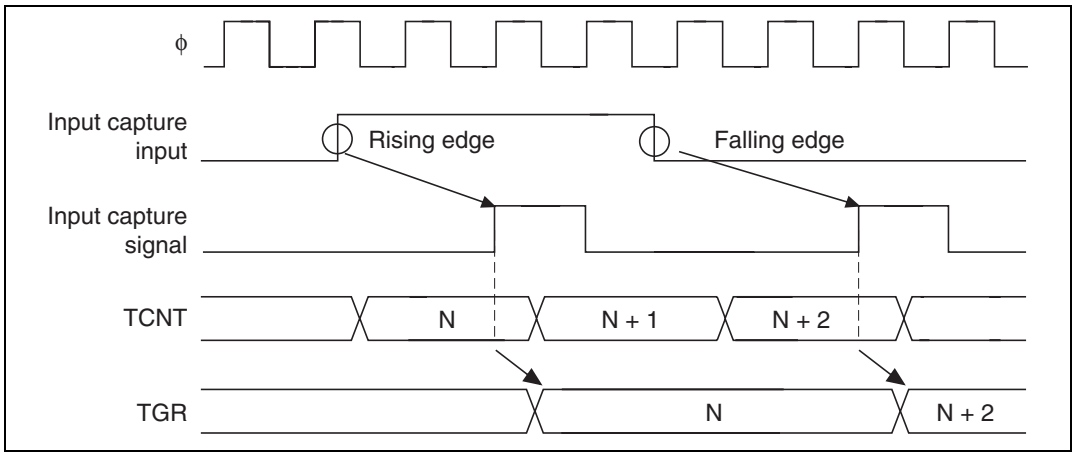

Figure 10.38 Input Capture Input Signal Timing

Counter Clearing Timing Due to Compare-Match/Input Capture: Timing for counter clearing due to compare-match is shown in figure 10.39. Figure 10.40 shows the timing for counter clearing due to input capture.

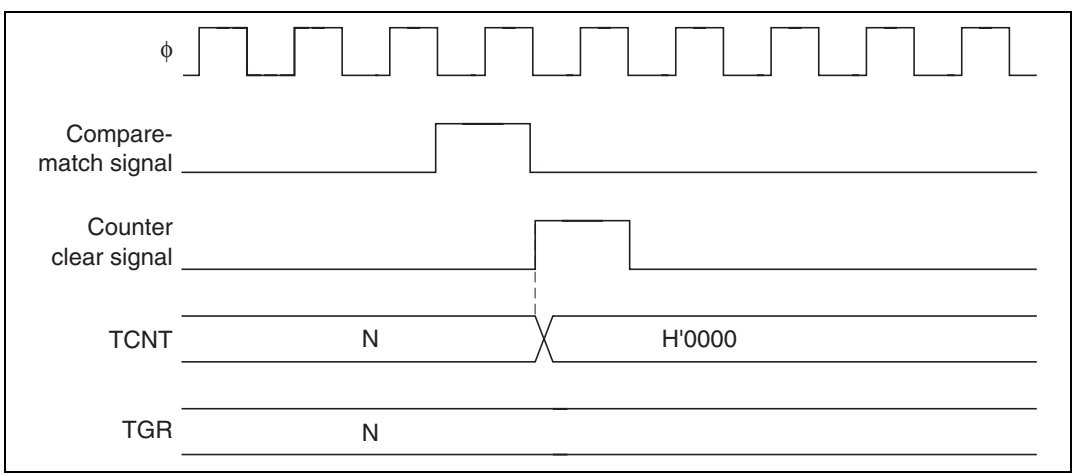

Figure 10.39 Counter Clearing Timing (Compare-Match)

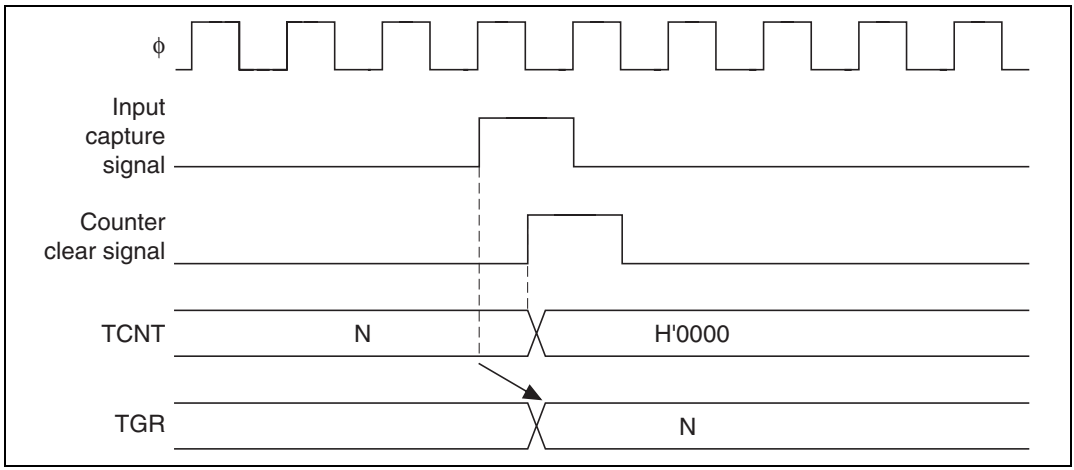

Figure 10.40 Counter Clearing Timing (Input Capture)

Buffer Operation Timing: Compare-match buffer operation timing is shown in figure 10.41. Figure 10.42 shows input capture buffer operation timing.

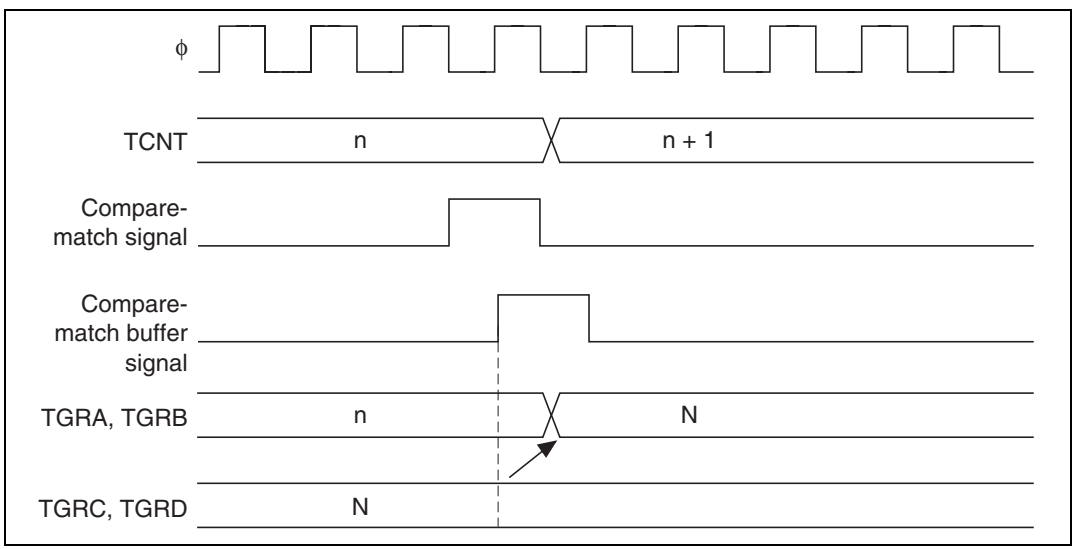

Figure 10.41 Buffer Operation Timing (Compare-Match)

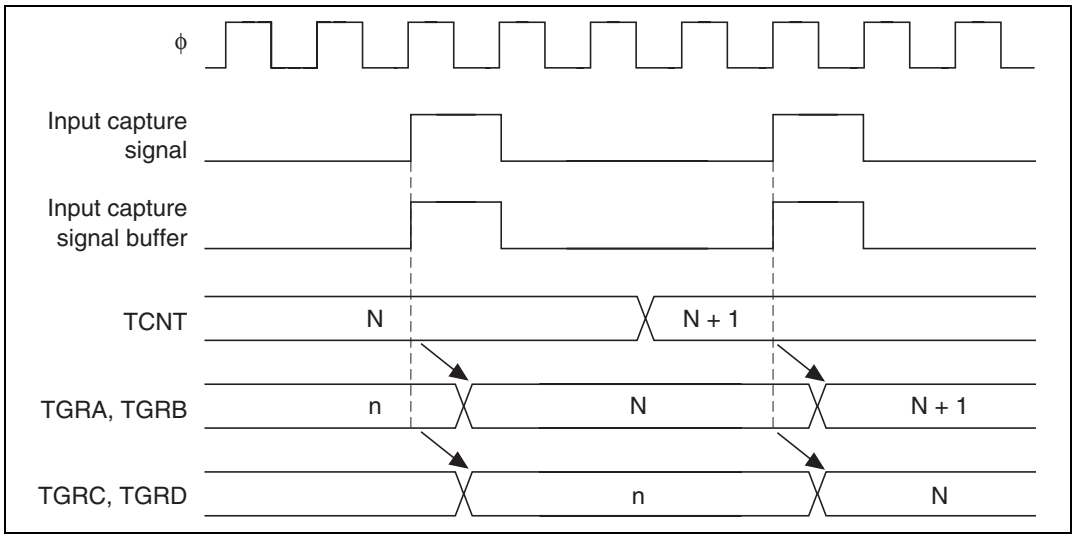

Figure 10.42 Buffer Operation Timing (Input Capture)

10.6.2 Interrupt Signal Timing

Setting TGF Flag Timing during Compare-Match: Figure 10.43 shows timing for the TGF flag of the timer status register (TSR) due to compare-match, as well as TGI interrupt request signal timing.

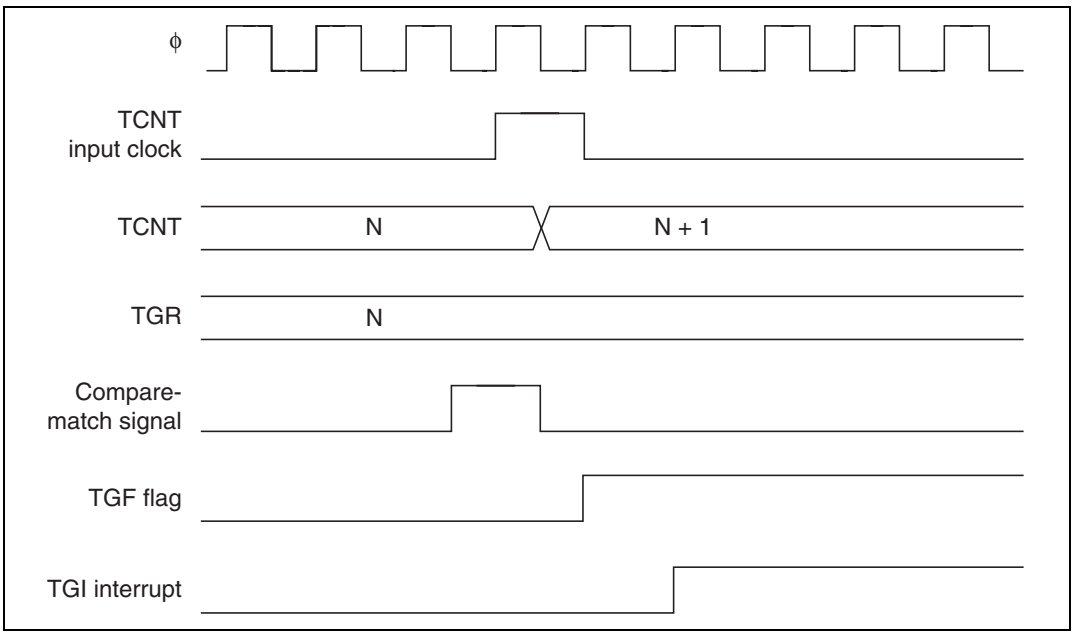

Figure 10.43 TGI Interrupt Timing (Compare Match)

Setting TGF Flag Timing during Input Capture: Figure 10.44 shows timing for the TGF flag of the timer status register (TSR) due to input capture, as well as TGI interrupt request signal timing.

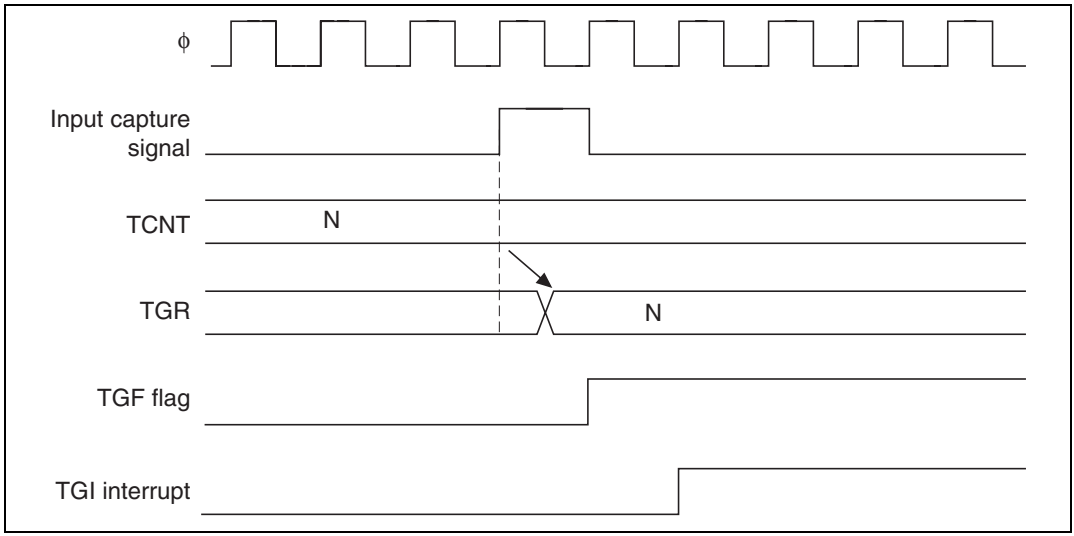

Figure 10.44 TGI Interrupt Timing (Input Capture)

Setting Timing for Overflow Flag (TCFV)/Underflow Flag (TCFU): Figure 10.45 shows timing for the TCFV flag of the timer status register (TSR) due to overflow, as well as TCIV interrupt request signal timing. Figure 10.46 shows timing for the TCFU flag of the timer status register (TSR) due to underflow, as well as TCIU interrupt request signal timing.

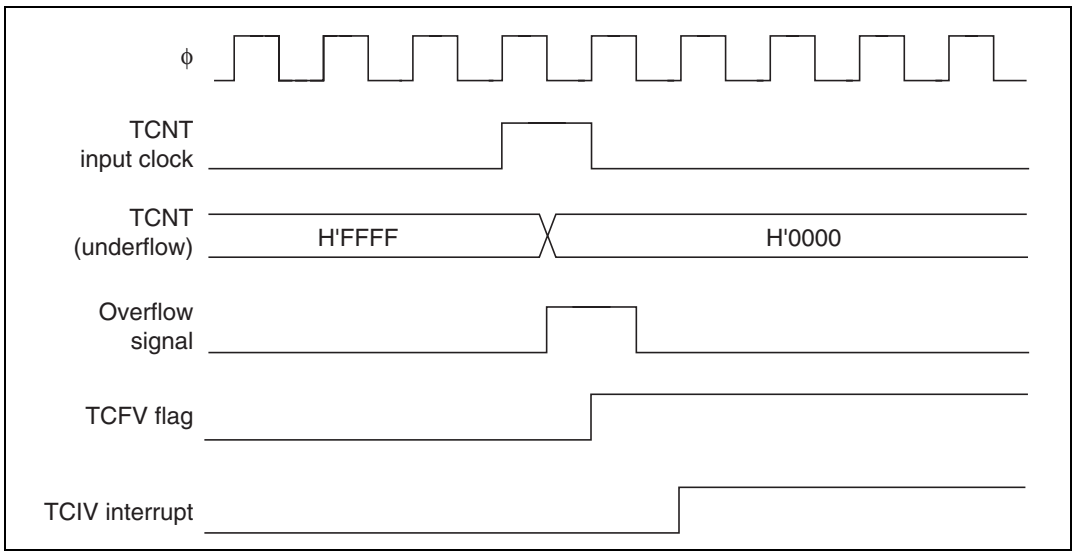

Figure 10.45 TCIV Interrupt Setting Timing

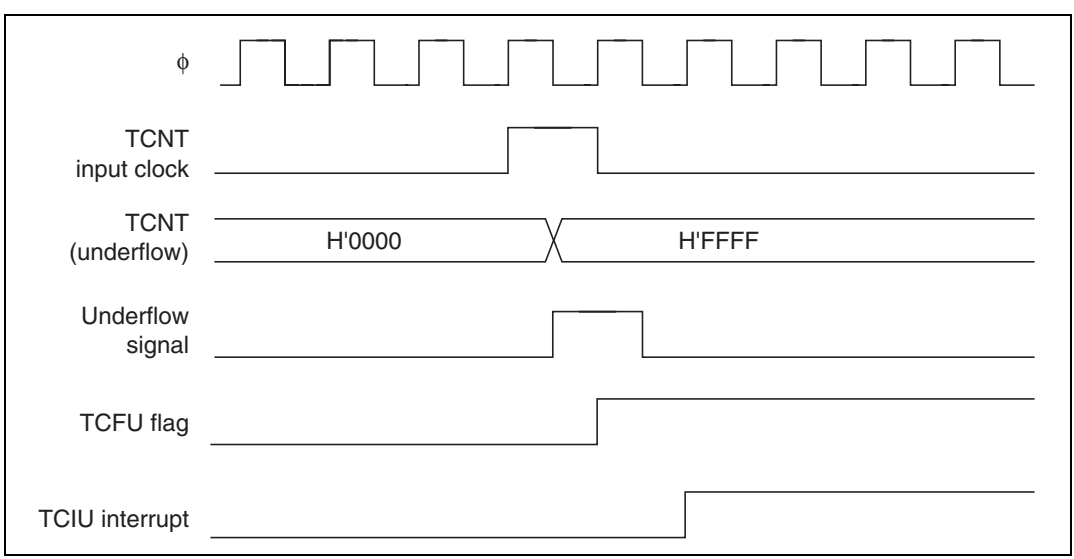

Figure 10.46 TCIU Interrupt Setting Timing

Status Flag Clearing Timing: The status flag is cleared when the CPU reads a 1 status followed by a 0 write. For DMA controller activation, clearing can also be done automatically. Figure 10.47 shows the timing for status flag clearing by the CPU. Figure 10.48 shows timing for clearing due to the DMA controller.

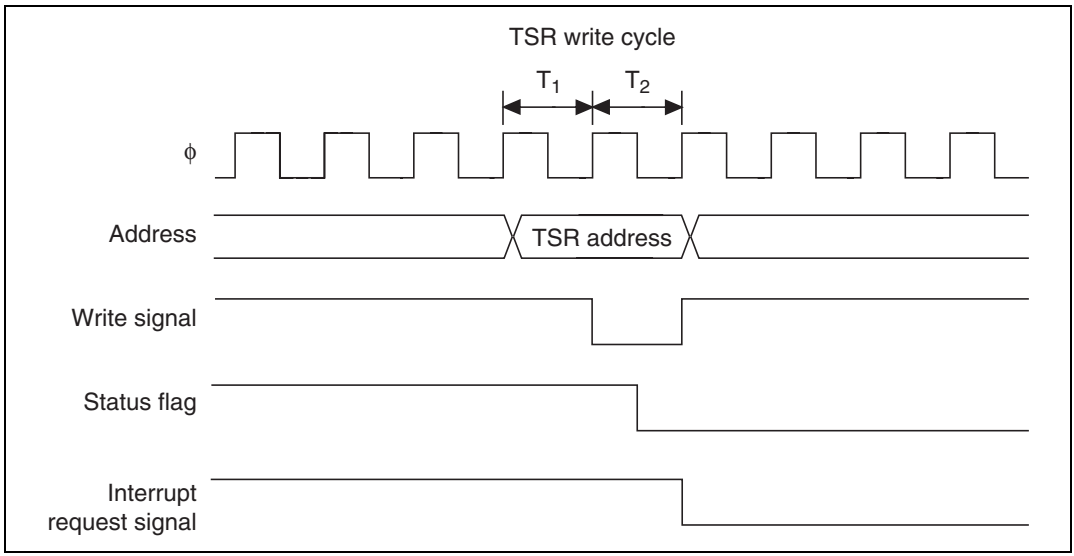

Figure 10.47 Timing of Status Flag Clearing by the CPU

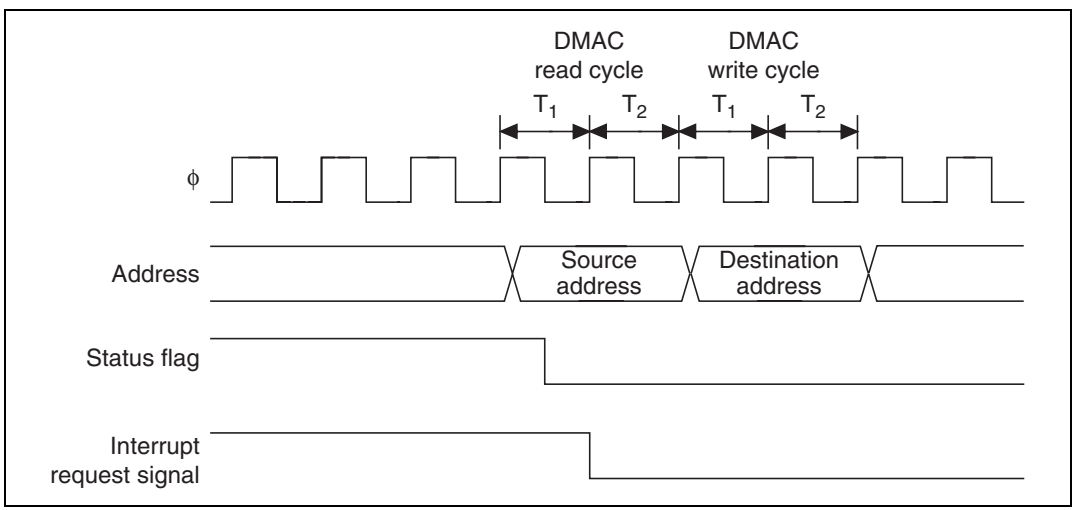

Figure 10.48 Timing of Status Flag Clearing by DMAC Activation

10.7 Usage Notes

This section describes contention and other matters requiring special attention during MTU operations.

10.7.1 Input Clock Limitations

The input clock pulse width, in the case of single edge, must be 1.5 states or greater, and 2.5 states or greater for both edges. Normal operation cannot be guaranteed with lesser pulse widths.

In phase counting mode, the phase difference between the two input clocks and the overlap must be 1.5 states or greater for each, and the pulse width must be 2.5 states or greater. Input clock conditions for phase counting mode are shown in figure 10.49.

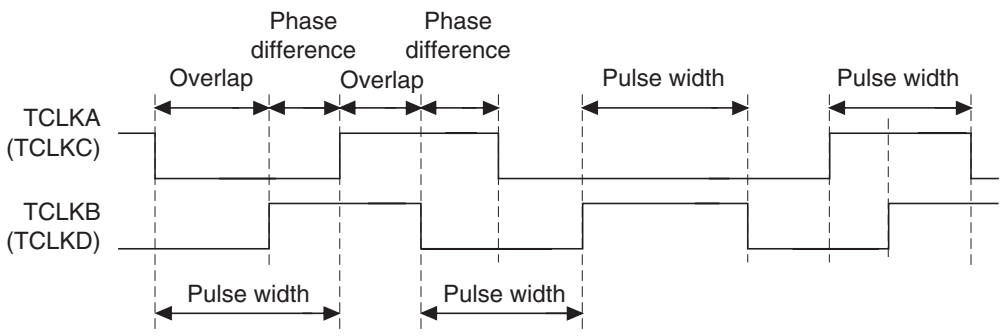

Notes: Phase difference and overlap: 1.5 states or greater
Pulse width: 2.5 states or greater

Figure 10.49 Phase Difference, Overlap, and Pulse Width in Phase Count Mode

10.7.2 Note on Cycle Setting

When setting a counter clearing by compare-match, clearing is done in the final state when TCNT matches the TGR value (update timing for count value on TCNT match). The actual number of states set in the counter is given by the following equation:

$$f = \frac{\phi}{(N + 1)}$$

(f: counter frequency, ϕ: operating frequency, N: value set in the TGR)

10.7.3 Contention between TCNT Write and Clear

If a counter clear signal is issued in the T_2 state during the TCNT write cycle, TCNT clearing has priority, and TCNT write is not conducted (figure 10.50).

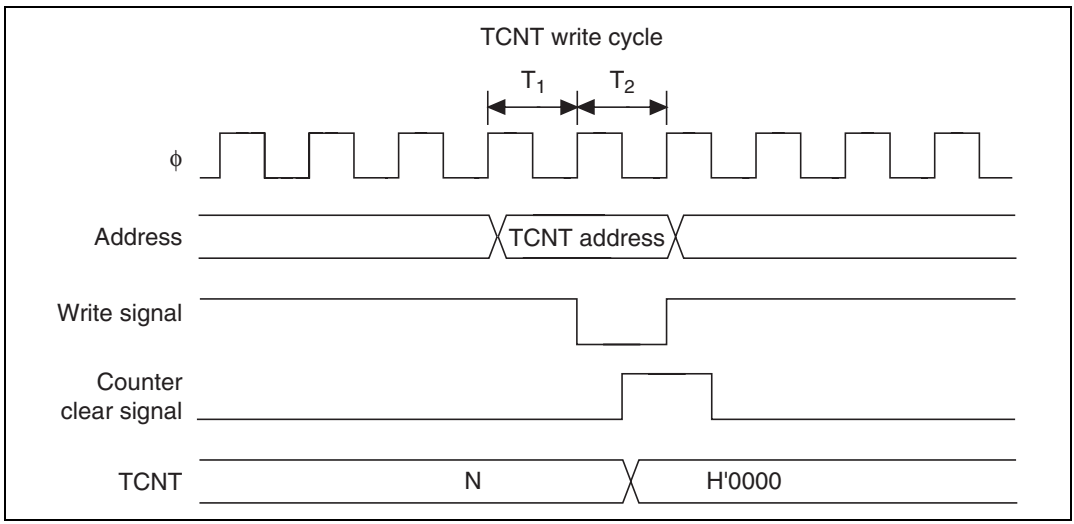

Figure 10.50 TCNT Write and Clear Contention

10.7.4 Contention between TCNT Write and Increment

If a count-up signal is issued in the T_2 state during the TCNT write cycle, TCNT write has priority, and the counter is not incremented (figure 10.51).

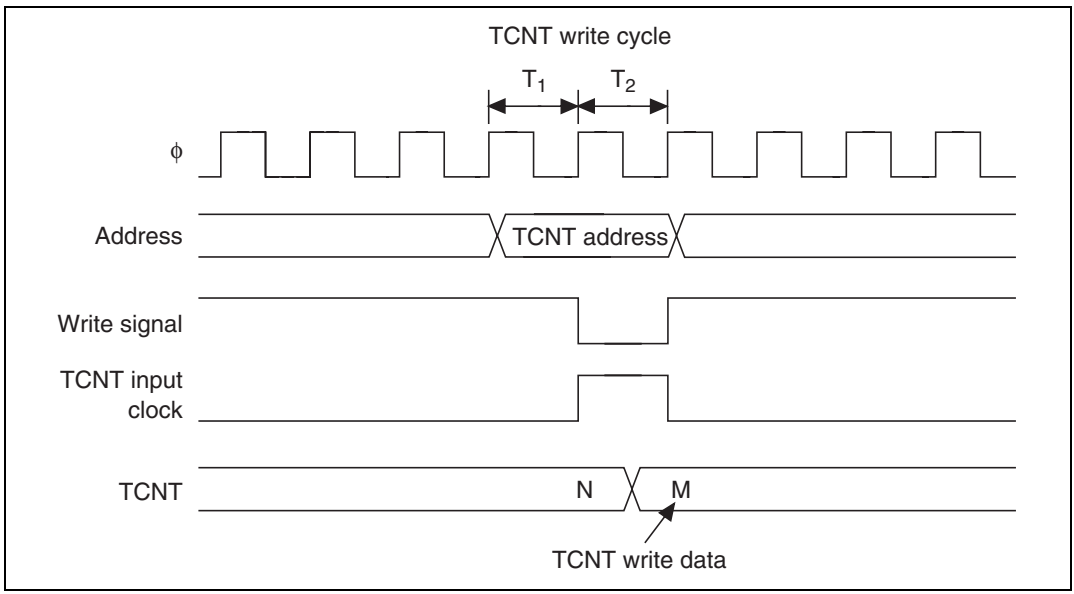

Figure 10.51 TCNT Write and Increment Contention

10.7.5 Contention between Buffer Register Write and Compare Match

If a compare-match occurs in the T_2 state of the TGR write cycle, data is transferred by the buffer operation from the buffer register to the TGR. Data to be transferred on channel 0 is that after write (figure 10.52).

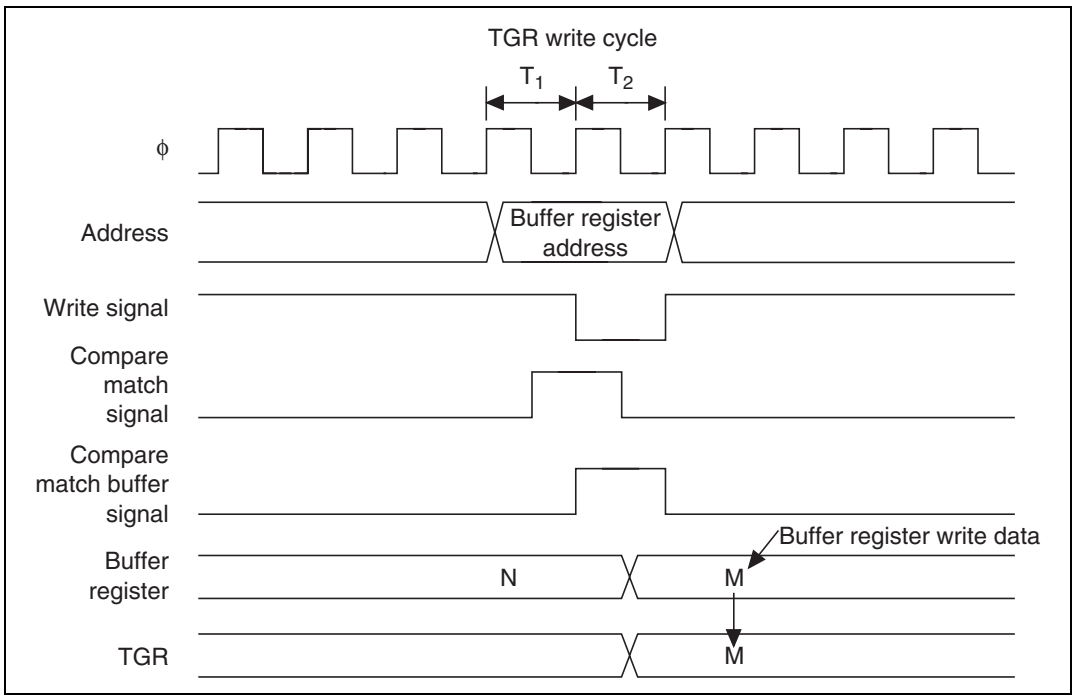

Figure 10.52 TGR Write and Compare-Match Contention (Channel 0)

10.7.6 Contention between TGR Read and Input Capture

If an input capture signal is issued in the T_1 state of the TGR read cycle, the read data is that after input capture transfer (figure 10.53).

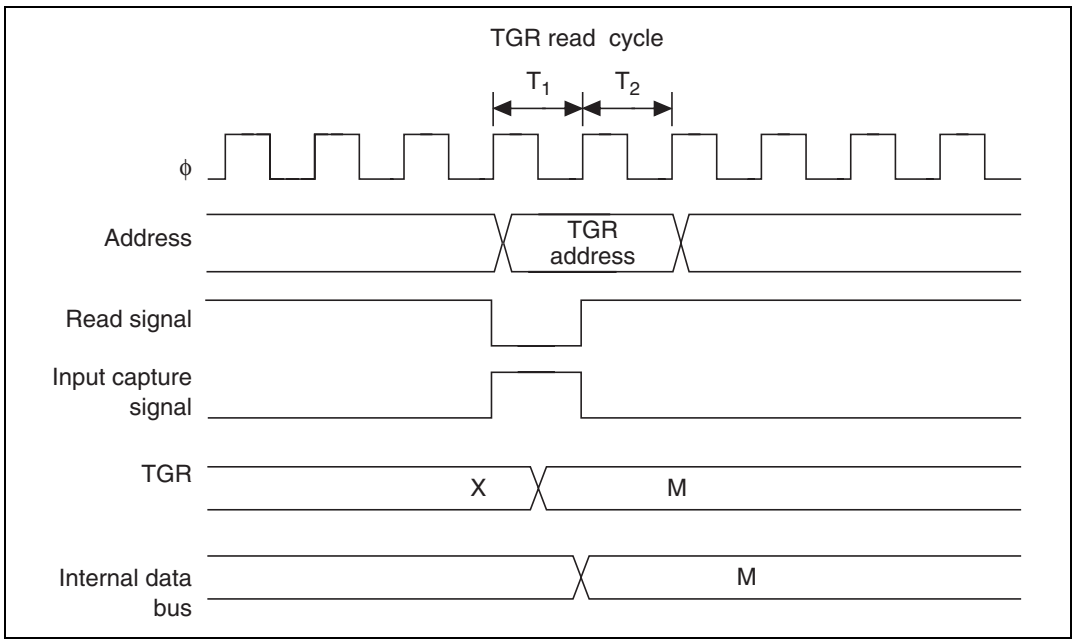

Figure 10.53 TGR Read and Input Capture Contention

10.7.7 Contention between TGR Write and Input Capture

If an input capture signal is issued in the T_2 state of the TGR read cycle, input capture has priority, and TGR write does not occur (figure 10.54).

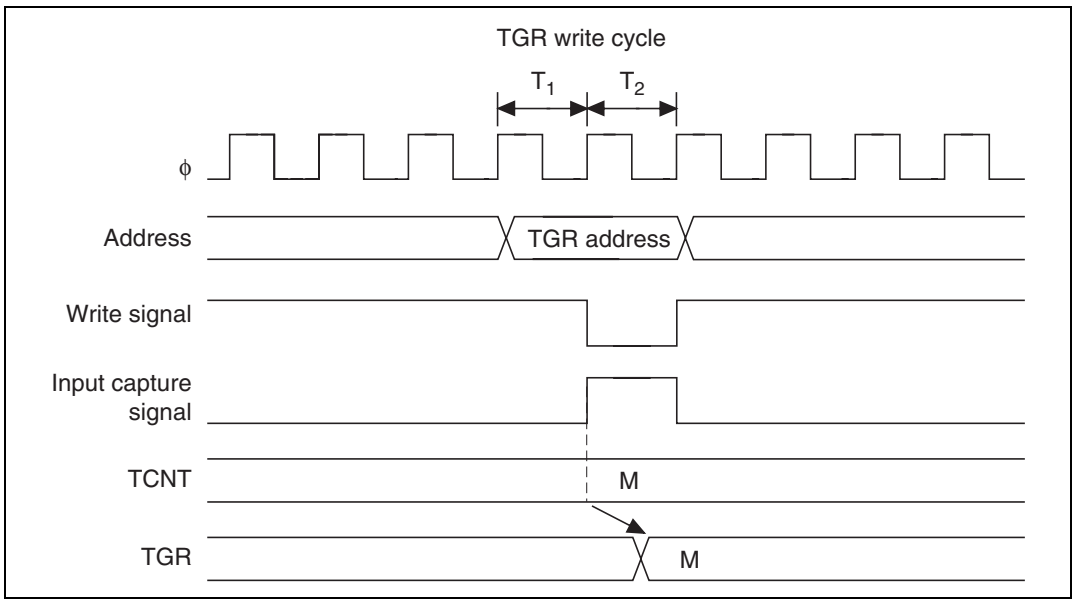

Figure 10.54 TGR Write and Input Capture Contention

10.7.8 Contention between Buffer Register Write and Input Capture

If an input capture signal is issued in the T_2 state of the buffer write cycle, write to the buffer register does not occur, and buffer operation takes priority (figure 10.55).

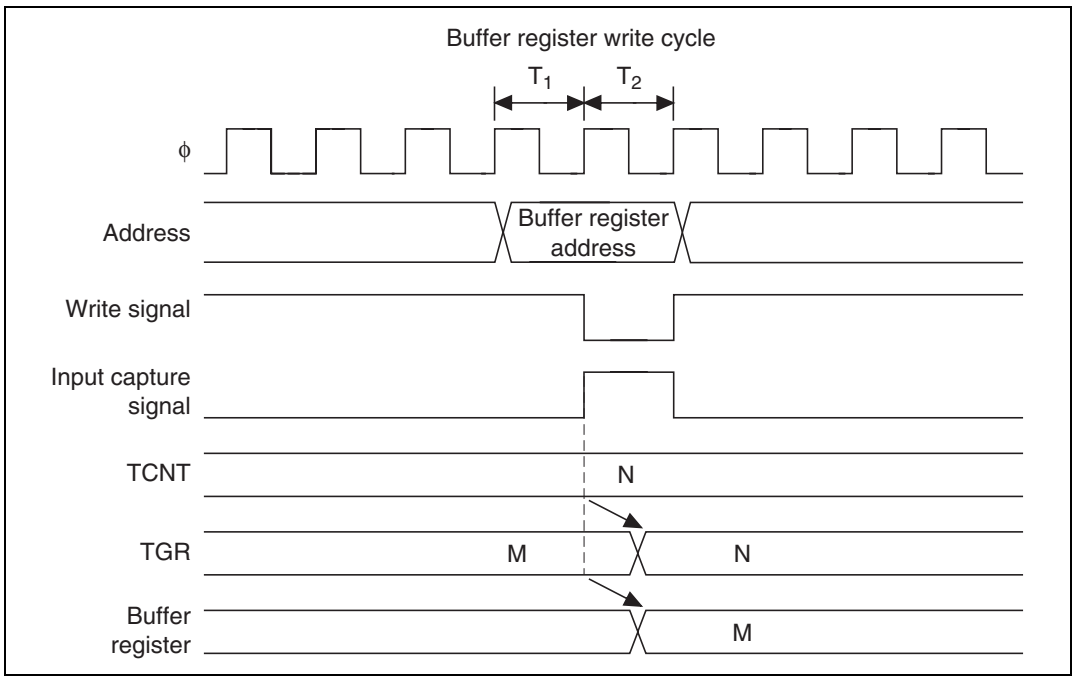

Figure 10.55 Buffer Register Write and Input Capture Contention

10.7.9 Contention between TGR Write and Compare Match

If a compare-match occurs in the T_2 state of the TGR write cycle, data is written to the TGR and a compare-match signal is issued (figure 10.56).

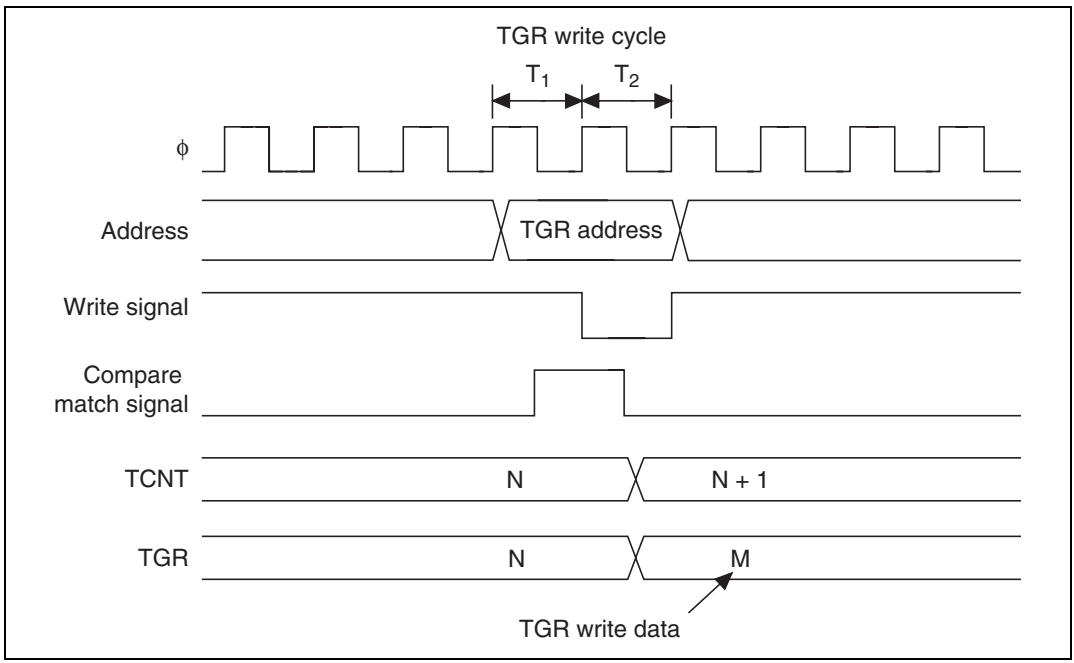

Figure 10.56 TGR Write and Compare Match Contention

10.7.10 TCNT2 Write and Overflow/Underflow Contention in Cascade Connection

With timer counters TCNT1 and TCNT2 in a cascade connection, when a contention occurs during TCNT1 count (during a TCNT2 overflow/underflow) in the T_2 state of the TCNT2 write cycle, the write to TCNT2 is conducted, and the TCNT1 count signal is prohibited. At this point, if there is match with TGR1A and the TCNT1 value, a compare signal is issued. Furthermore, when the TCNT1 count clock is selected as the input capture source of channel 0, TGRA0 to TGRD0 carry out the input capture operation. In addition, when the compare match/input capture is selected as the input capture source of TGRB1, TGRB1 carries out input capture operation. The timing is shown in figure 10.57.

For cascade connections, be sure to synchronize settings for channels 1 and 2 when setting TCNT clearing.

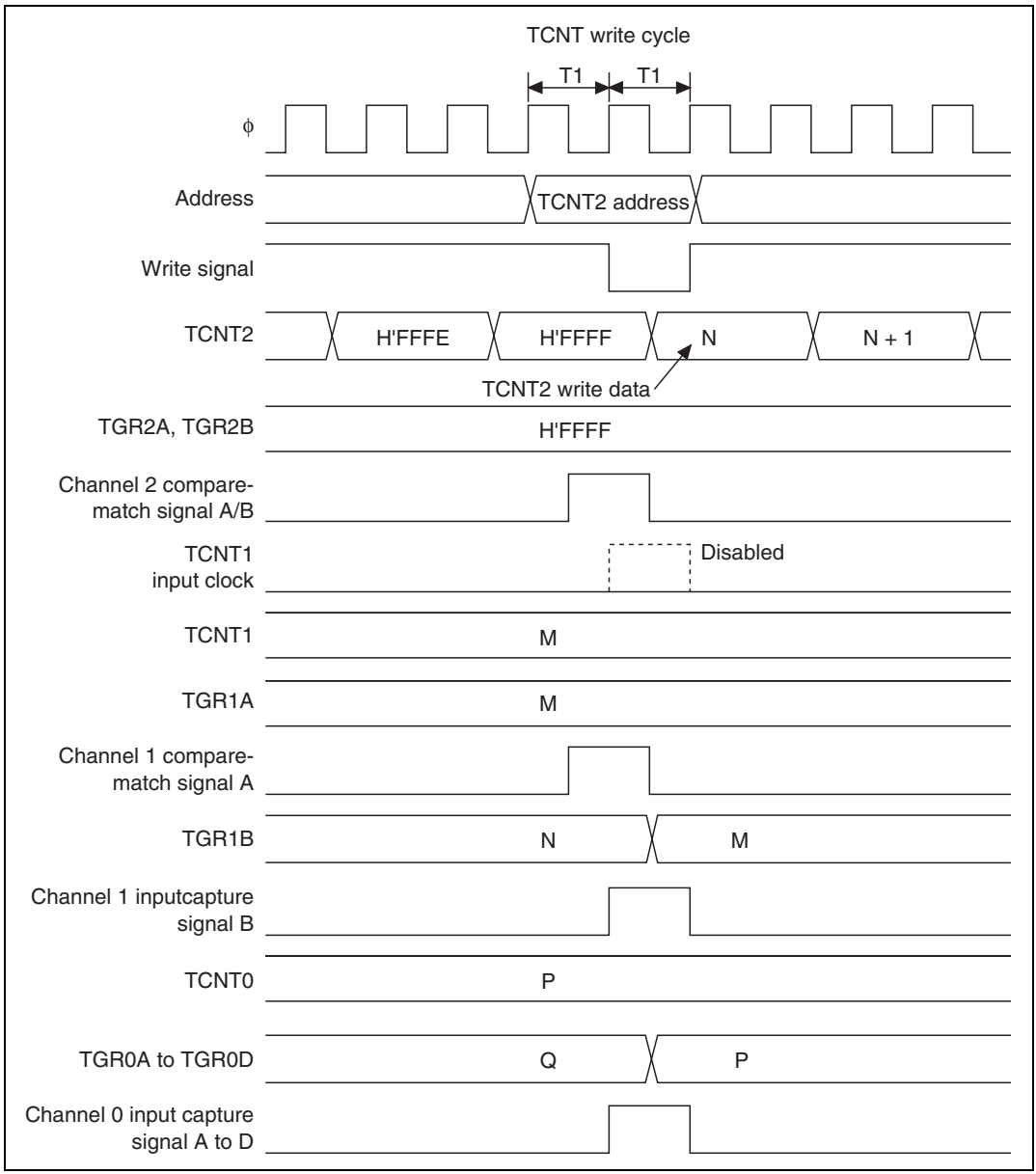

Figure 10.57 TCNT2 Write and Overflow/Underflow Contention with Cascade Connection

10.7.11 Contention between Overflow/Underflow and Counter Clearing

If overflow/underflow and counter clearing occur simultaneously, the TCFV/TCFU flag in TSR is not set and TCNT clearing takes precedence.

Figure 10.58 shows the operation timing when a TGR compare-match is specified as the clearing source, and H'FFFF is set in TGR.

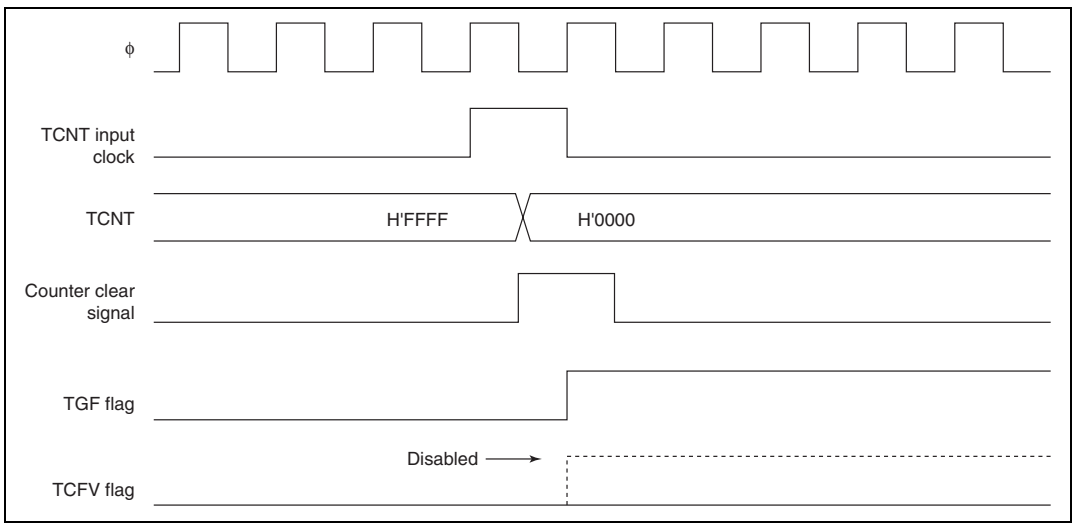

Figure 10.58 Contention between Overflow and Counter Clearing

10.7.12 Contention between TCNT Write and Overflow/Underflow

If there is an up-count or down-count in the T2 state of a TCNT write cycle, and overflow/underflow occurs, the TCNT write takes precedence and the TCFV/TCFU flag in TSR is not set .

Figure 10.59 shows the operation timing in this case.

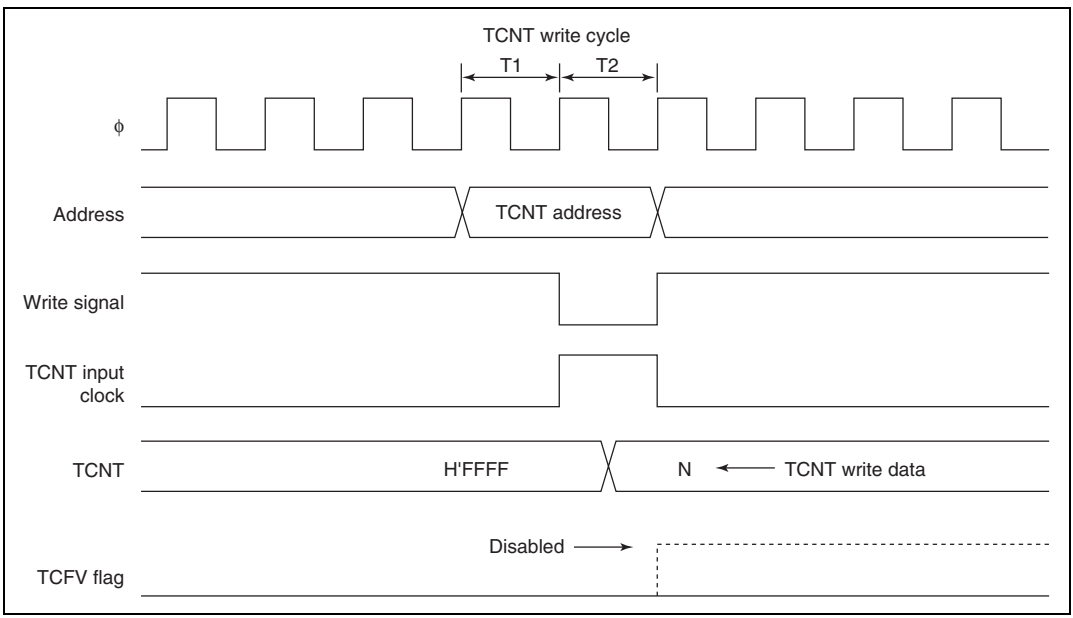

Figure 10.59 Contention between TCNT Write and Overflow

10.7.13 Cautions on Carrying Out Buffer Operation of Channel 0 in PWM Mode 1

In PWM mode 1, the TGRA and TGRB registers are used in pairs and PWM waveform is output to the TIOCA pin. In the same manner, the TGRC and TGRD registers are used in pairs and PWM waveform is output to the TIOCC pin. If either the TGRC or TGRD register is operating as a buffer register, the TIOCC pin cannot execute default output setting or PWM waveform output with the I/O control register (TIOR).

Note that for channel 0, the TIOCC pin allows both default output setting by TIOR and PWM output when setting buffer operation only for the TGRD register in PWM mode 1.

When using channel 0 in PWM mode 1 and setting buffer operation, use both the TGRC and TGRD registers as buffer registers.

10.8 MTU Output Pin Initialization

10.8.1 Operating Modes

The MTU has the following four operating modes. Waveform output is possible in all of these modes.

- Normal mode (channels 0 to 2)
- PWM mode 1 (channels 0 to 2)
- PWM mode 2 (channels 0 to 2)
- Phase counting modes 1 to 4 (channels 1 and 2)

The MTU output pin initialization method for each of these modes is described in this section.

10.8.2 Reset Start Operation

The MTU output pins (TIOC*) are initialized low by a reset and in standby mode. Since MTU pin function selection is performed by the pin function controller (PFC), when the PFC is set, the MTU pin states at that point are output to the ports. When MTU output is selected by the PFC immediately after a reset, the MTU output initial level, low, is output directly at the port. When the active level is low, the system will operate at this point, and therefore the PFC setting should be made after initialization of the MTU output pins is completed.

Note: Channel number and port notation are substituted for *.

10.8.3 Operation in Case of Re-Setting Due to Error during Operation, Etc.

If an error occurs during MTU operation, MTU output should be cut by the system. Cutoff is performed by switching the pin output to port output with the PFC and outputting the inverse of the active level. The pin initialization procedures for re-setting due to an error during operation, etc., and the procedures for restarting in a different mode after re-setting, are shown below.

The MTU has four operating modes, as stated above. There are thus 16 mode transition combinations. Possible mode transition combinations are shown in table 10.14.

Table 10.14 Mode Transition Combinations

	After			
Before	**Normal**	**PWM1**	**PWM2**	**PCM**
Normal	(1)	(2)	(3)	(4)
PWM1	(5)	(6)	(7)	(8)
PWM2	(9)	(10)	(11)	(12)
PCM	(13)	(14)	(15)	(16)

Legend:
Normal: Normal mode
PWM1: PWM mode 1
PWM2: PWM mode 2
PCM: Phase counting modes 1 to 4

The above abbreviations are used in some places in following descriptions.

10.8.4 Overview of Initialization Procedures and Mode Transitions in Case of Error during Operation, etc.

- When making a transition to a mode (Normal, PWM1, PWM2, PCM) in which the pin output level is selected by the timer I/O control register (TIOR) setting, initialize the pins by means of a TIOR setting.
- In PWM mode 1, since a waveform is not output to the TIOC*B (TIOC*D) pin, setting TIOR will not initialize the pins. If initialization is required, carry it out in normal mode, then switch to PWM mode 1.
- In PWM mode 2, since a waveform is not output to the cycle register pin, setting TIOR will not initialize the pins. If initialization is required, carry it out in normal mode, then switch to PWM mode 2.
- In normal mode or PWM mode 2, if TGRC and TGRD operate as buffer registers, setting TIOR will not initialize the buffer register pins. If initialization is required, clear buffer mode, carry out initialization, then set buffer mode again.
- In PWM mode 1, if either TGRC or TGRD operates as a buffer register, setting TIOR will not initialize the TGRC pin. To initialize the TGRC pin, clear buffer mode, carry out initialization, then set buffer mode again.

Note: Channel number is substituted for * indicated in this article.

Pin initialization procedures are described below for the numbered combinations in table 10.14. The active level is assumed to be low.

(1) Operation when Error Occurs during Normal Mode Operation, and Operation is Restarted in Normal Mode: Figure 10.60 shows an explanatory diagram of the case where an error occurs in normal mode and operation is restarted in normal mode after re-setting.

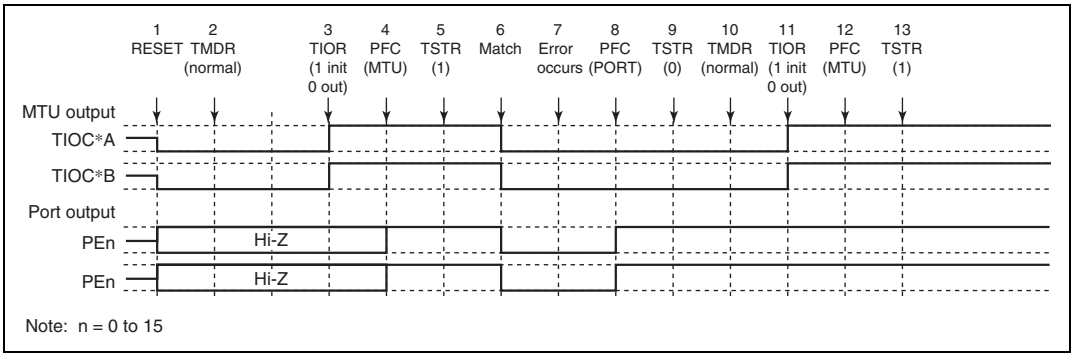

Figure 10.60 Error Occurrence in Normal Mode, Recovery in Normal Mode

1. After a reset, MTU output is low and ports are in the high-impedance state.
2. After a reset, the TMDR setting is for normal mode.
3. Initialize the pins with TIOR. (The example shows initial high output, with low output on compare-match occurrence.)
4. Set MTU output with the PFC.
5. The count operation is started by TSTR.
6. Output goes low on compare-match occurrence.
7. An error occurs.
8. Set port output with the PFC and output the inverse of the active level.
9. The count operation is stopped by TSTR.
10. Not necessary when restarting in normal mode.
11. Initialize the pins with TIOR.
12. Set MTU output with the PFC.
13. Operation is restarted by TSTR.

(2) Operation when Error Occurs during Normal Mode Operation, and Operation is Restarted in PWM Mode 1: Figure 10.61 shows an explanatory diagram of the case where an error occurs in normal mode and operation is restarted in PWM mode 1 after re-setting.

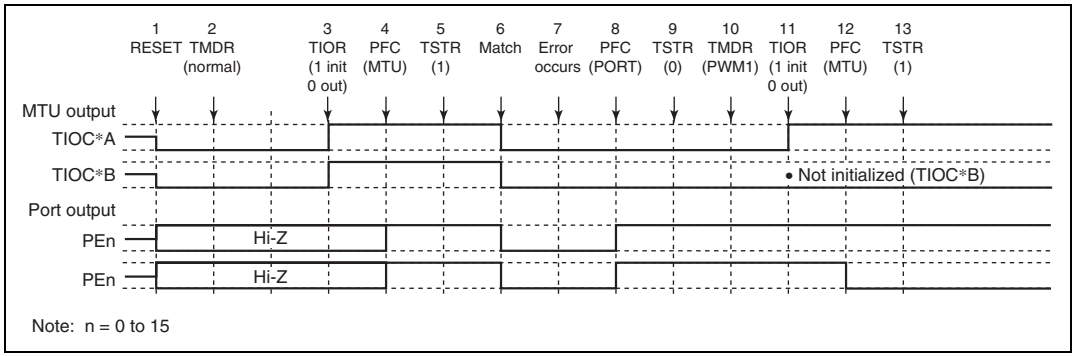

Figure 10.61 Error Occurrence in Normal Mode, Recovery in PWM Mode 1

1 to 9 are the same as in figure 10.60.

10. Set PWM mode 1.
11. Initialize the pins with TIOR. (In PWM mode 1, the TIOC*B side is not initialized. If initialization is required, initialize in normal mode, then switch to PWM mode 1.)
12. Set MTU output with the PFC.
13. Operation is restarted by TSTR.

(3) Operation when Error Occurs during Normal Mode Operation, and Operation is Restarted in PWM Mode 2: Figure 10.62 shows an explanatory diagram of the case where an error occurs in normal mode and operation is restarted in PWM mode 2 after re-setting.

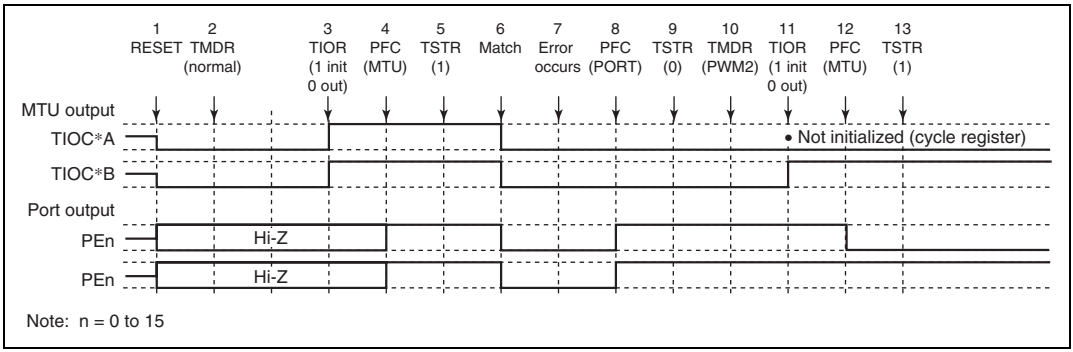

Figure 10.62 Error Occurrence in Normal Mode, Recovery in PWM Mode 2

1 to 9 are the same as in figure 10.60.

10. Set PWM mode 2.
11. Initialize the pins with TIOR. (In PWM mode 2, the cycle register pins are not initialized. If initialization is required, initialize in normal mode, then switch to PWM mode 2.)
12. Set MTU output with the PFC.
13. Operation is restarted by TSTR.

(4) Operation when Error Occurs during Normal Mode Operation, and Operation is Restarted in Phase Counting Mode: Figure 10.63 shows an explanatory diagram of the case where an error occurs in normal mode and operation is restarted in phase counting mode after re-setting.

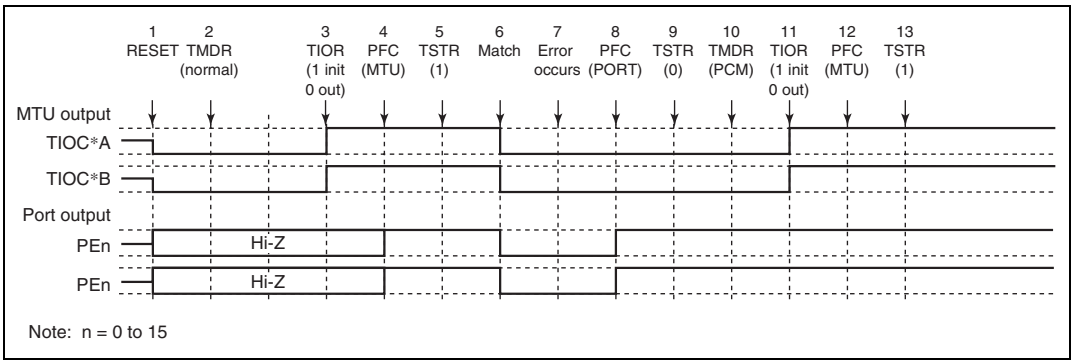

Figure 10.63 Error Occurrence in Normal Mode, Recovery in Phase Counting Mode

1 to 9 are the same as in figure 10.60.

10. Set phase counting mode.
11. Initialize the pins with TIOR.
12. Set MTU output with the PFC.
13. Operation is restarted by TSTR.

(5) Operation when Error Occurs during PWM Mode 1 Operation, and Operation is Restarted in Normal Mode: Figure 10.64 shows an explanatory diagram of the case where an error occurs in PWM mode 1 and operation is restarted in normal mode after re-setting.

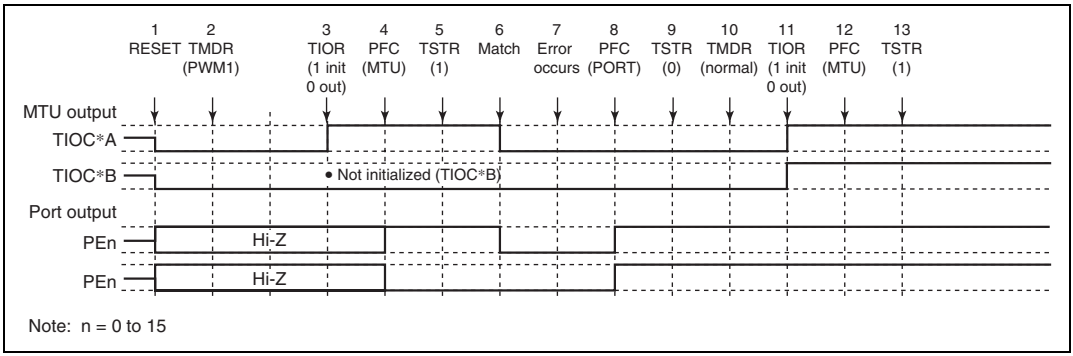

Figure 10.64 Error Occurrence in PWM Mode 1, Recovery in Normal Mode

1. After a reset, MTU output is low and ports are in the high-impedance state.
2. Set PWM mode 1.
3. Initialize the pins with TIOR. (The example shows initial high output, with low output on compare-match occurrence. In PWM mode 1, the TIOC*B side is not initialized.)
4. Set MTU output with the PFC.
5. The count operation is started by TSTR.
6. Output goes low on compare-match occurrence.
7. An error occurs.
8. Set port output with the PFC and output the inverse of the active level.
9. The count operation is stopped by TSTR.
10. Set normal mode.
11. Initialize the pins with TIOR.
12. Set MTU output with the PFC.
13. Operation is restarted by TSTR.

(6) Operation when Error Occurs during PWM Mode 1 Operation, and Operation is Restarted in PWM Mode 1: Figure 10.65 shows an explanatory diagram of the case where an error occurs in PWM mode 1 and operation is restarted in PWM mode 1 after re-setting.

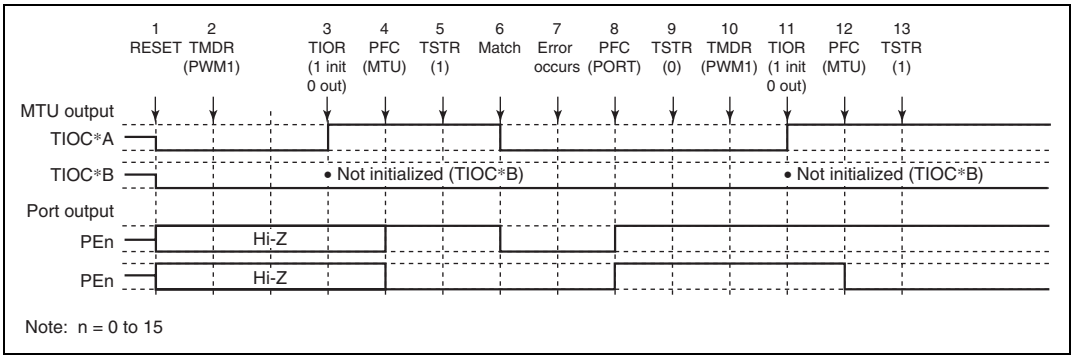

Figure 10.65 Error Occurrence in PWM Mode 1, Recovery in PWM Mode 1

1 to 9 are the same as in figure 10.64.

10. Not necessary when restarting in PWM mode 1.
11. Initialize the pins with TIOR. (In PWM mode 1, the TIOC*B side is not initialized.)
12. Set MTU output with the PFC.
13. Operation is restarted by TSTR.

(7) Operation when Error Occurs during PWM Mode 1 Operation, and Operation is Restarted in PWM Mode 2: Figure 10.66 shows an explanatory diagram of the case where an error occurs in PWM mode 1 and operation is restarted in PWM mode 2 after re-setting.

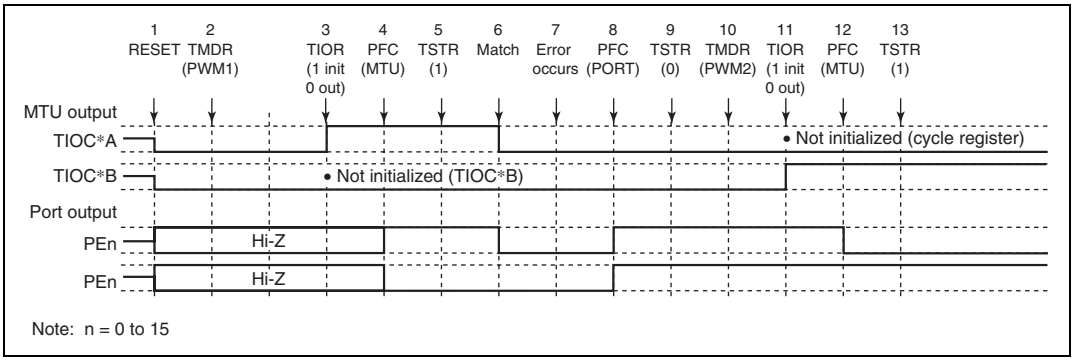

Figure 10.66 Error Occurrence in PWM Mode 1, Recovery in PWM Mode 2

1 to 9 are the same as in figure 10.64.

10. Set PWM mode 2.
11. Initialize the pins with TIOR. (In PWM mode 2, the cycle register pins are not initialized.)
12. Set MTU output with the PFC.
13. Operation is restarted by TSTR.

(8) Operation when Error Occurs during PWM Mode 1 Operation, and Operation is Restarted in Phase Counting Mode: Figure 10.67 shows an explanatory diagram of the case where an error occurs in PWM mode 1 and operation is restarted in phase counting mode after re-setting.

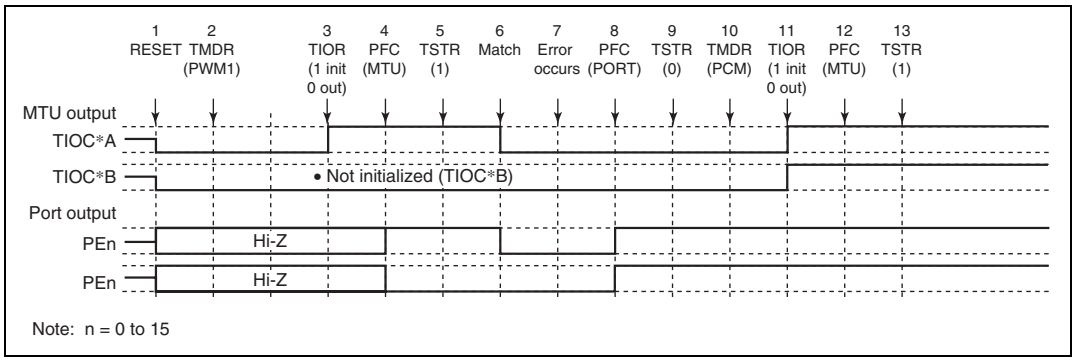

Figure 10.67 Error Occurrence in PWM Mode 1, Recovery in Phase Counting Mode

1 to 9 are the same as in figure 10.64.

10. Set phase counting mode.
11. Initialize the pins with TIOR.
12. Set MTU output with the PFC.
13. Operation is restarted by TSTR.

(9) Operation when Error Occurs during PWM Mode 2 Operation, and Operation is Restarted in Normal Mode: Figure 10.68 shows an explanatory diagram of the case where an error occurs in PWM mode 2 and operation is restarted in normal mode after re-setting.

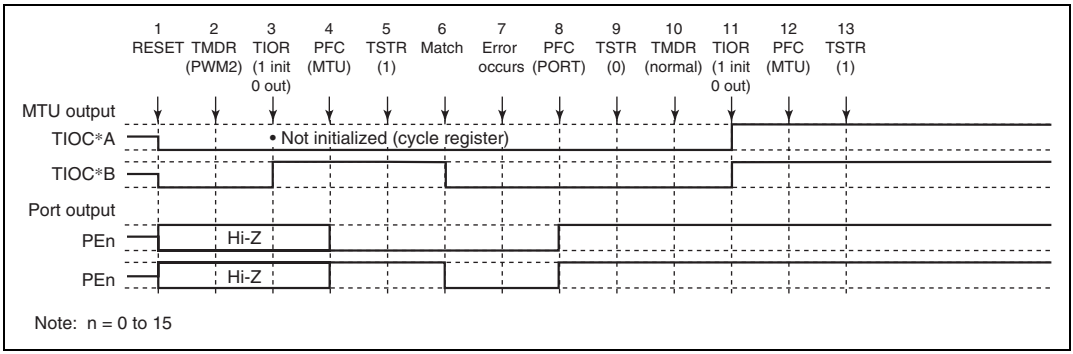

Figure 10.68 Error Occurrence in PWM Mode 2, Recovery in Normal Mode

1. After a reset, MTU output is low and ports are in the high-impedance state.
2. Set PWM mode 2.
3. Initialize the pins with TIOR. (The example shows initial high output, with low output on compare-match occurrence. In PWM mode 2, the cycle register pins are not initialized. In the example, TIOC*A is the cycle register.)
4. Set MTU output with the PFC.
5. The count operation is started by TSTR.
6. Output goes low on compare-match occurrence.
7. An error occurs.
8. Set port output with the PFC and output the inverse of the active level.
9. The count operation is stopped by TSTR.
10. Set normal mode.
11. Initialize the pins with TIOR.
12. Set MTU output with the PFC.
13. Operation is restarted by TSTR.

(10) Operation when Error Occurs during PWM Mode 2 Operation, and Operation is Restarted in PWM Mode 1: Figure 10.69 shows an explanatory diagram of the case where an error occurs in PWM mode 2 and operation is restarted in PWM mode 1 after re-setting.

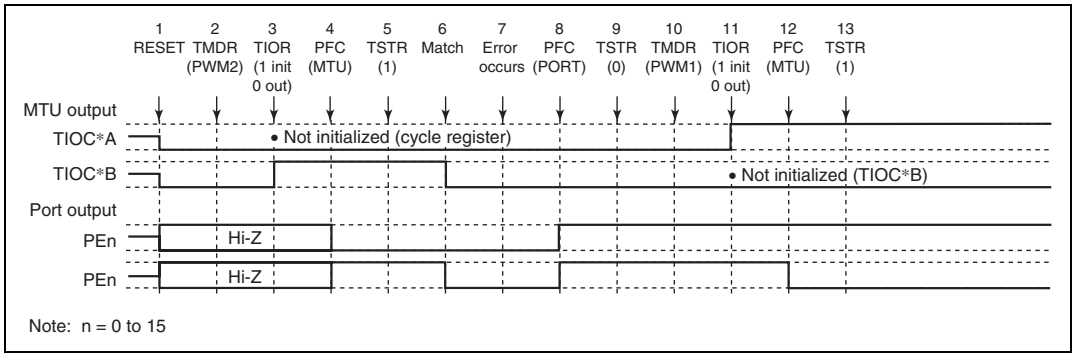

Figure 10.69 Error Occurrence in PWM Mode 2, Recovery in PWM Mode 1

1 to 9 are the same as in figure 10.68.

10. Set PWM mode 1.
11. Initialize the pins with TIOR. (In PWM mode 1, the TIOC*B side is not initialized.)
12. Set MTU output with the PFC.
13. Operation is restarted by TSTR.

(11) Operation when Error Occurs during PWM Mode 2 Operation, and Operation is Restarted in PWM Mode 2: Figure 10.70 shows an explanatory diagram of the case where an error occurs in PWM mode 2 and operation is restarted in PWM mode 2 after re-setting.

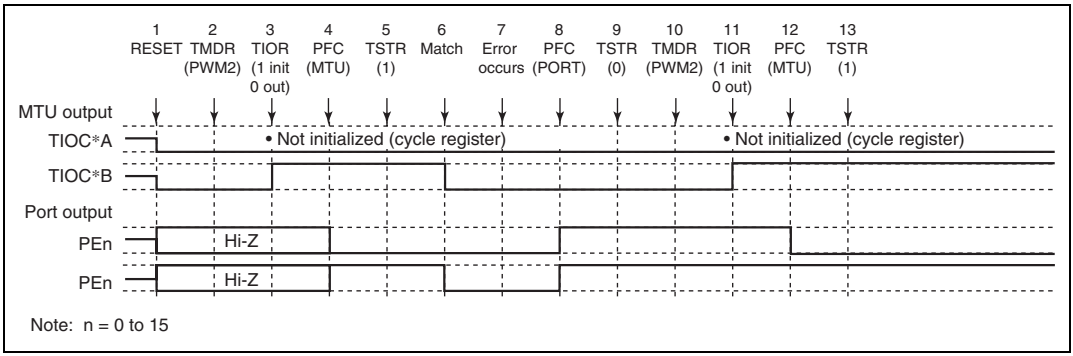

Figure 10.70 Error Occurrence in PWM Mode 2, Recovery in PWM Mode 2

1 to 9 are the same as in figure 10.68.

10. Not necessary when restarting in PWM mode 2.
11. Initialize the pins with TIOR. (In PWM mode 2, the cycle register pins are not initialized.)
12. Set MTU output with the PFC.
13. Operation is restarted by TSTR.

(12) Operation when Error Occurs during PWM Mode 2 Operation, and Operation is Restarted in Phase Counting Mode: Figure 10.71 shows an explanatory diagram of the case where an error occurs in PWM mode 2 and operation is restarted in phase counting mode after re-setting.

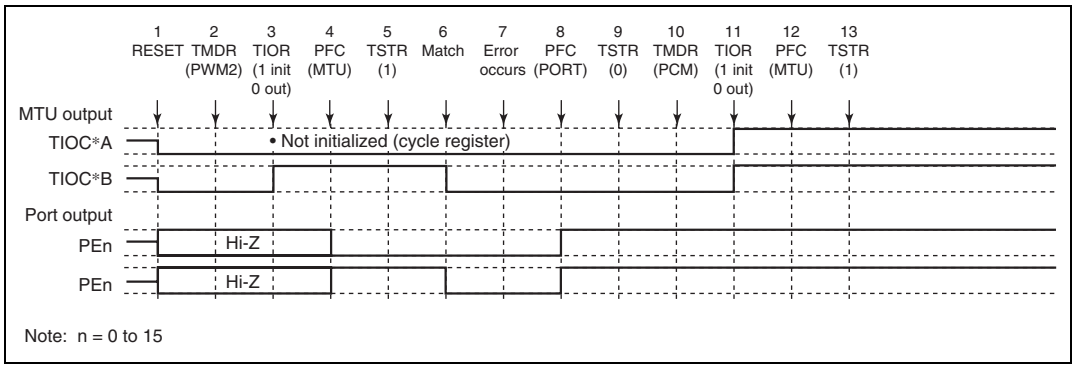

Figure 10.71 Error Occurrence in PWM Mode 2, Recovery in Phase Counting Mode

1 to 9 are the same as in figure 10.68.

10. Set phase counting mode.
11. Initialize the pins with TIOR.
12. Set MTU output with the PFC.
13. Operation is restarted by TSTR.

(13) Operation when Error Occurs during Phase Counting Mode Operation, and Operation is Restarted in Normal Mode: Figure 10.72 shows an explanatory diagram of the case where an error occurs in phase counting mode and operation is restarted in normal mode after re-setting.

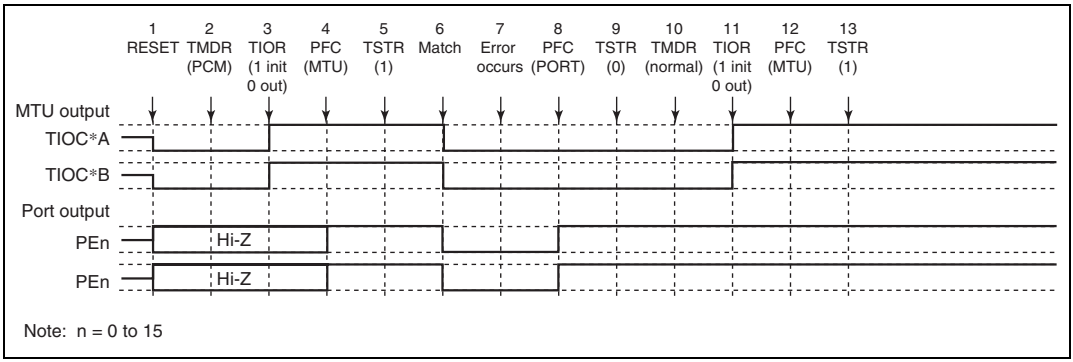

Figure 10.72 Error Occurrence in Phase Counting Mode, Recovery in Normal Mode

1. After a reset, MTU output is low and ports are in the high-impedance state.
2. Set phase counting mode.
3. Initialize the pins with TIOR. (The example shows initial high output, with low output on compare-match occurrence.)
4. Set MTU output with the PFC.
5. The count operation is started by TSTR.
6. Output goes low on compare-match occurrence.
7. An error occurs.
8. Set port output with the PFC and output the inverse of the active level.
9. The count operation is stopped by TSTR.
10. Set in normal mode.
11. Initialize the pins with TIOR.
12. Set MTU output with the PFC.
13. Operation is restarted by TSTR.

(14) Operation when Error Occurs during Phase Counting Mode Operation, and Operation is Restarted in PWM Mode 1: Figure 10.73 shows an explanatory diagram of the case where an error occurs in phase counting mode and operation is restarted in PWM mode 1 after re-setting.

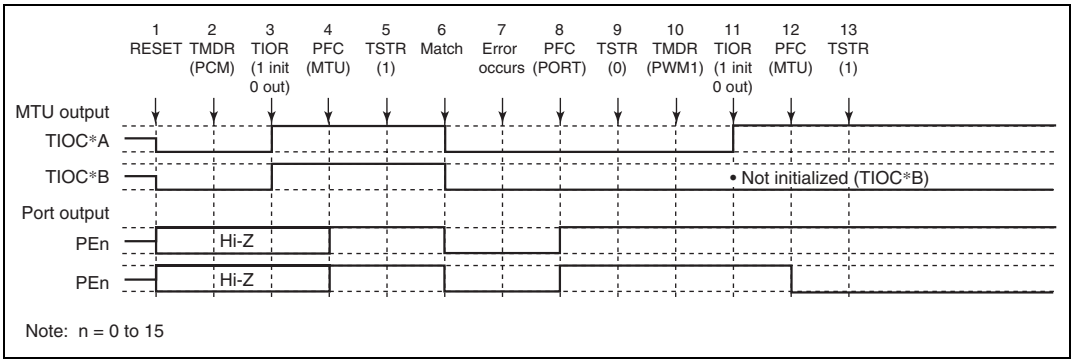

Figure 10.73 Error Occurrence in Phase Counting Mode, Recovery in PWM Mode 1

1 to 9 are the same as in figure 10.72.

10. Set PWM mode 1.
11. Initialize the pins with TIOR. (In PWM mode 1, the TIOC*B side is not initialized.)
12. Set MTU output with the PFC.
13. Operation is restarted by TSTR.

(15) Operation when Error Occurs during Phase Counting Mode Operation, and Operation is Restarted in PWM Mode 2: Figure 10.74 shows an explanatory diagram of the case where an error occurs in phase counting mode and operation is restarted in PWM mode 2 after re-setting.

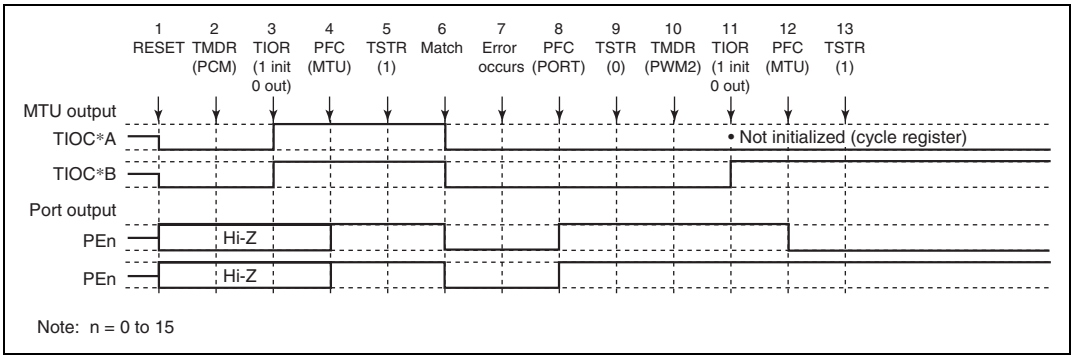

Figure 10.74 Error Occurrence in Phase Counting Mode, Recovery in PWM Mode 2

1 to 9 are the same as in figure 10.72.

10. Set PWM mode 2.
11. Initialize the pins with TIOR. (In PWM mode 2, the cycle register pins are not initialized.)
12. Set MTU output with the PFC.
13. Operation is restarted by TSTR.

(16) Operation when Error Occurs during Phase Counting Mode Operation, and Operation is Restarted in Phase Counting Mode: Figure 10.75 shows an explanatory diagram of the case where an error occurs in phase counting mode and operation is restarted in phase counting mode after re-setting.

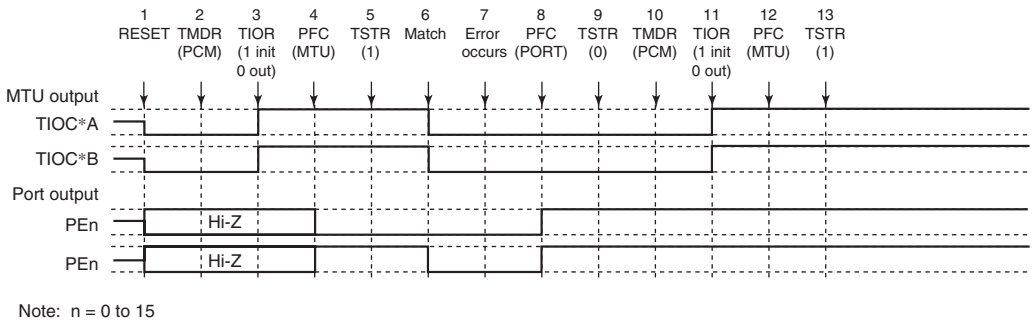

Figure 10.75 Error Occurrence in Phase Counting Mode, Recovery in Phase Counting Mode

1 to 9 are the same as in figure 10.72.

10. Not necessary when restarting in phase counting mode.
11. Initialize the pins with TIOR.
12. Set MTU output with the PFC.
13. Operation is restarted by TSTR.

Section 11 Watchdog Timer (WDT)

11.1 Overview

The watchdog timer (WDT) is a 1-channel timer for monitoring system operations. If a system encounters a problem (crashes, for example) and the timer counter overflows without being rewritten correctly by the CPU, an overflow signal ($\overline{\text{WDTOVF}}$) is output externally. The WDT can simultaneously generate an internal reset signal for the entire chip.

When the watchdog function is not needed, the WDT can be used as an interval timer. In the interval timer operation, an interval timer interrupt is generated at each counter overflow. The WDT is also used in recovering from the standby mode.

11.1.1 Features

The WDT has the following features:

- Works in watchdog timer mode or interval timer mode.
- Outputs $\overline{\text{WDTOVF}}$ in the watchdog timer mode. When the counter overflows in the watchdog timer mode, overflow signal $\overline{\text{WDTOVF}}$ is output externally. You can select whether to reset the chip internally when this happens.
- Generates interrupts in the interval timer mode. When the counter overflows, it generates an interval timer interrupt.
- Clears standby mode.
- Works with eight counter input clocks.

11.1.2 Block Diagram

Figure 11.1 is the block diagram of the WDT.

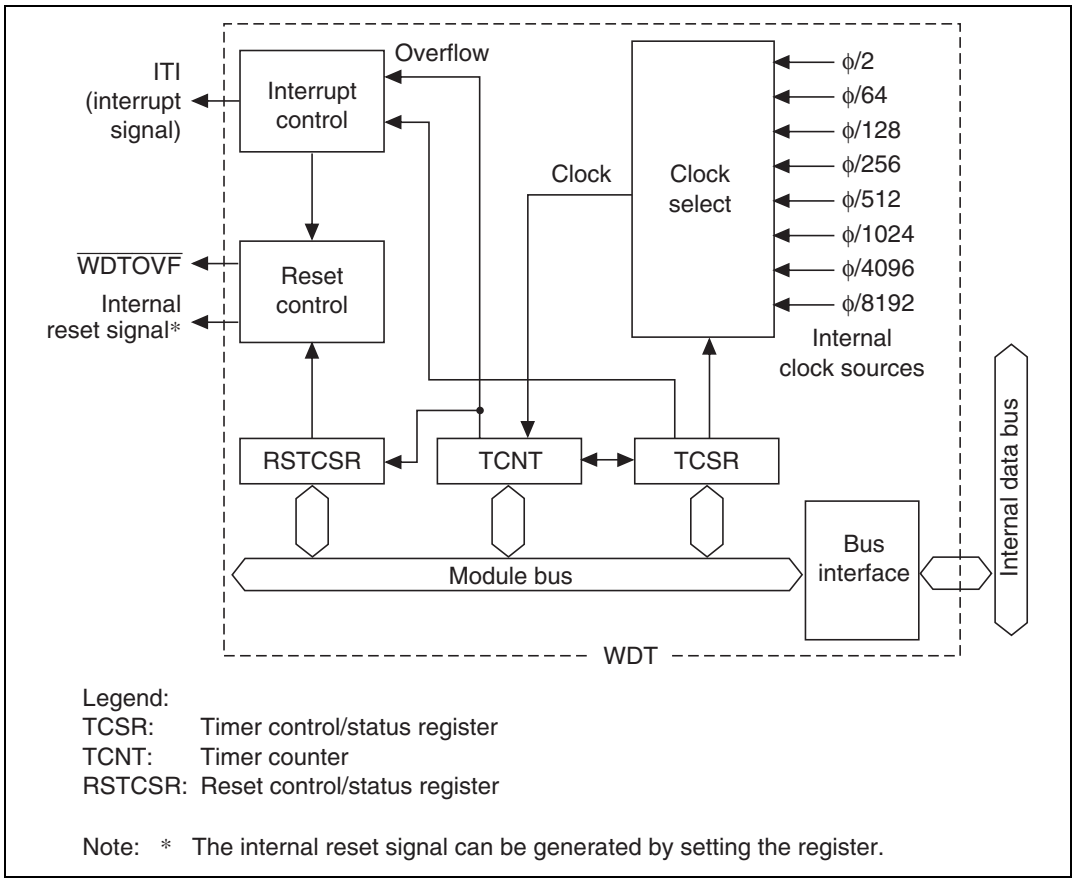

Figure 11.1 WDT Block Diagram

11.1.3 Pin Configuration

Table 11.1 shows the pin configuration.

Table 11.1 Pin Configuration

Pin	Abbreviation	I/O	Function
Watchdog timer overflow	$\overline{\text{WDTOVF}}$	O	Outputs the counter overflow signal in the watchdog timer mode

11.1.4 Register Configuration

Table 11.2 summarizes the three WDT registers. They are used to select the clock, switch the WDT mode, and control the reset signal.

Table 11.2 WDT Registers

				Address	
Name	**Abbreviation**	**R/W**	**Initial Value**	**Write*1**	**Read*2**
Timer control/status register	TCSR	R/(W)*3	H'18	H'FFFF8610	H'FFFF8610
Timer counter	TCNT	R/W	H'00		H'FFFF8611
Reset control/status register	RSTCSR	R/(W)*3	H'1F	H'FFFF8612	H'FFFF8613

Notes: 1. Write by word transfer. It cannot be written in byte or longword.
2. Read by byte transfer. It cannot be read in word or longword.
3. Only 0 can be written in bit 7 to clear the flag.

11.2 Register Descriptions

11.2.1 Timer Counter (TCNT)

Bit:	7	6	5	4	3	2	1	0
Initial value:	0	0	0	0	0	0	0	0
R/W:	R/W	R/W	R/W	R/W	R/W	R/W	R/W	R/W

The TCNT is an 8-bit read/write upcounter. (The TCNT differs from other registers in that it is more difficult to write to. See section 11.2.4, Register Access, for details.) When the timer enable bit (TME) in the timer control/status register (TCSR) is set to 1, the watchdog timer counter starts counting pulses of an internal clock selected by clock select bits 2 to 0 (CKS2 to CKS0) in the TCSR. When the value of the TCNT overflows (changes from H'FF to H'00), a watchdog timer overflow signal ($\overline{\text{WDTOVF}}$) or interval timer interrupt (ITI) is generated, depending on the mode selected in the WT/$\overline{\text{IT}}$ bit of the TCSR.

The TCNT is initialized to H'00 by a power-on reset and when the TME bit is cleared to 0. It is not initialized in the standby mode.

11.2.2 Timer Control/Status Register (TCSR)

Bit:	7	6	5	4	3	2	1	0
	OVF	WT/$\overline{\text{IT}}$	TME	—	—	CKS2	CKS1	CKS0
Initial value:	0	0	0	1	1	0	0	0
R/W:	R/(W)	R/W	R/W	R	R	R/W	R/W	R/W

The timer control/status register (TCSR) is an 8-bit read/write register. (The TCSR differs from other registers in that it is more difficult to write to. See section 11.2.4, Register Access, for details.) Its functions include selecting the timer mode and clock source.

Bits 7 to 5 are initialized to 000 by a power-on reset or in standby mode. Bits 2 to 0 are initialized to 000 by a power-on reset, but retain their values in the standby mode.

Bit 7—Overflow Flag (OVF): Indicates that the TCNT has overflowed from H'FF to H'00 in the interval timer mode. It is not set in the watchdog timer mode.

Bit 7 OVF	Description
0	No overflow of TCNT in interval timer mode (initial value) Cleared by reading OVF, then writing 0 in OVF
1	TCNT overflow in the interval timer mode

Bit 6—Timer Mode Select (WT/$\overline{\text{IT}}$): Selects whether to use the WDT as a watchdog timer or interval timer. When the TCNT overflows, the WDT either generates an interval timer interrupt (ITI) or generates a $\overline{\text{WDTOVF}}$ signal, depending on the mode selected.

Bit 6 WT/$\overline{\text{IT}}$	Description
0	Interval timer mode: interval timer interrupt request to the CPU when TCNT overflows (initial value)
1	Watchdog timer mode: $\overline{\text{WDTOVF}}$ signal output externally when TCNT overflows. (Section 11.2.3, Reset Control/Status Register (RSTCSR), describes in detail what happens when TCNT overflows in the watchdog timer mode.)

Bit 5—Timer Enable (TME): Enables or disables the timer.

Bit 5 TME	Description
0	Timer disabled: TCNT is initialized to H'00 and count-up stops (initial value)
1	Timer enabled: TCNT starts counting. A $\overline{\text{WDTOVF}}$ signal or interrupt is generated when TCNT overflows.

Bits 4 and 3—Reserved: These bits always read as 1. The write value should always be 1.

Bits 2 to 0: Clock Select 2 to 0 (CKS2 to CKS0): These bits select one of eight internal clock sources for input to the TCNT. The clock signals are obtained by dividing the frequency of the system clock (ϕ).

			Description	
Bit 2 CKS2	**Bit 1 CKS1**	**Bit 0 CKS0**	**Clock Source**	**Overflow Interval* (ϕ = 28.7 MHz)**
0	0	0	ϕ/2 (initial value)	17.9 μs
0	0	1	ϕ/64	573.4 μs
0	1	0	ϕ/128	1.1 ms
0	1	1	ϕ/256	2.3 ms
1	0	0	ϕ/512	4.6 ms
1	0	1	ϕ/1024	9.2 ms
1	1	0	ϕ/4096	36.7 ms
1	1	1	ϕ/8192	73.4 ms

Note: * The overflow interval listed is the time from when the TCNT begins counting at H'00 until an overflow occurs.

11.2.3 Reset Control/Status Register (RSTCSR)

Bit:	7	6	5	4	3	2	1	0
	WOVF	RSTE	—	—	—	—	—	—
Initial value:	0	0	0	1	1	1	1	1
R/W:	R/(W)*	R/W	R	R	R	R	R	R

Note: * Only 0 can be written in bit 7 to clear the flag.

The RSTCSR is an 8-bit readable and writable register. (The RSTCSR differs from other registers in that it is more difficult to write. See section 11.2.4, Register Access, for details.) It controls output of the internal reset signal generated by timer counter (TCNT) overflow. RSTCR is initialized to H'1F by input of a reset signal from the $\overline{\text{RES}}$ pin, but is not initialized by the internal reset signal generated by the overflow of the WDT. It is initialized to H'1F in standby mode.

Bit 7—Watchdog Timer Overflow Flag (WOVF): Indicates that the TCNT has overflowed (H'FF to H'00) in the watchdog timer mode. It is not set in the interval timer mode.

Bit 7 WOVF	Description	
0	No TCNT overflow in watchdog timer mode	(initial value)
	Cleared when software reads WOVF, then writes 0 in WOVF	
1	Set by TCNT overflow in watchdog timer mode	

Bit 6—Reset Enable (RSTE): Selects whether to reset the chip internally if the TCNT overflows in the watchdog timer mode.

Bit 6 RSTE	Description	
0	Not reset when TCNT overflows	(initial value)
	LSI not reset internally, but TCNT and TCSR reset within WDT.	
1	Reset when TCNT overflows	

Bit 5—Reserved: This bit always read as 0. The write value should always be 0.

Bits 4 to 0—Reserved: These bits always read as 1. The write value should always be 1.

11.2.4 Register Access

The watchdog timer's TCNT, TCSR, and RSTCSR registers differ from other registers in that they are more difficult to write to. The procedures for writing and reading these registers are given below.

Writing to the TCNT and TCSR: These registers must be written by a word transfer instruction. They cannot be written by byte transfer instructions.

The TCNT and TCSR both have the same write address. The write data must be contained in the lower byte of the written word. The upper byte must be H'5A (for the TCNT) or H'A5 (for the TCSR) (figure 11.2). This transfers the write data from the lower byte to the TCNT or TCSR.

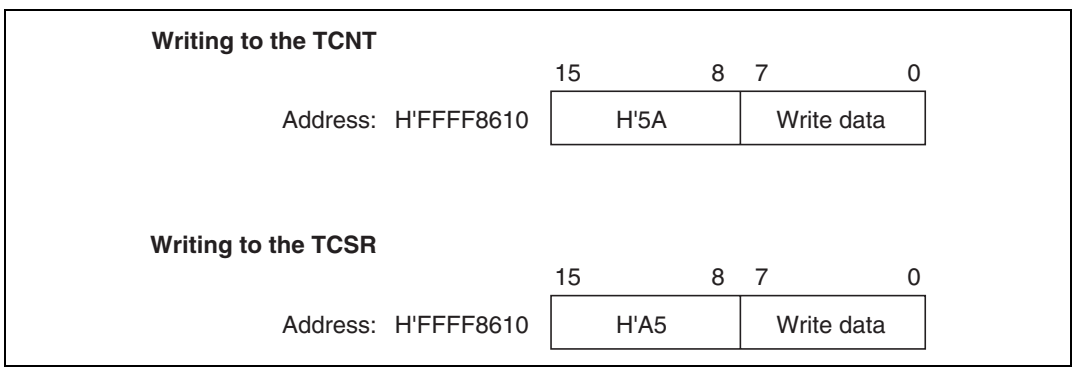

Figure 11.2 Writing to the TCNT and TCSR

Writing to the RSTCSR: The RSTCSR must be written by a word access to address H'FFFF8612. It cannot be written by byte transfer instructions.

Procedures for writing 0 in WOVF (bit 7) and for writing to RSTE (bit 6) are different, as shown in figure 11.3.

To write 0 in the WOVF bit, the write data must be H'A5 in the upper byte and H'00 in the lower byte. This clears the WOVF bit to 0. The RSTE bit is not affected. To write to the RSTE bit, the upper byte must be H'5A and the lower byte must be the write data. The values of bit 6 of the lower byte is transferred to the RSTE bit, respectively. The WOVF bit is not affected.

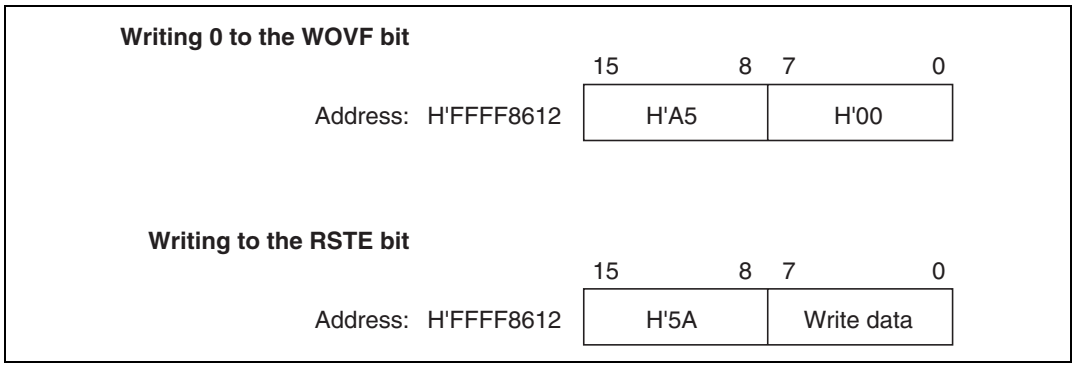

Figure 11.3 Writing to the RSTCSR

Reading from the TCNT, TCSR, and RSTCSR: TCNT, TCSR, and RSTCSR are read like other registers. Use byte transfer instructions. The read addresses are H'FFFF8610 for the TCSR, H'FFFF8611 for the TCNT, and H'FFFF8613 for the RSTCSR.

11.3 Operation

11.3.1 Watchdog Timer Mode

To use the WDT as a watchdog timer, set the WT/$\overline{\text{IT}}$ and TME bits of the TCSR to 1. Software must prevent TCNT overflow by rewriting the TCNT value (normally by writing H'00) before overflow occurs. No TCNT overflows will occur while the system is operating normally, but if the TCNT fails to be rewritten and overflows occur due to a system crash or the like, a $\overline{\text{WDTOVF}}$ signal is output externally (figure 11.4). The $\overline{\text{WDTOVF}}$ signal can be used to reset the system. The $\overline{\text{WDTOVF}}$ signal is output for 128 ϕ clock cycles.

If the RSTE bit in the RSTCSR is set to 1, a signal to reset the chip will be generated internally simultaneous to the $\overline{\text{WDTOVF}}$ signal when TCNT overflows. The internal reset signal is output for 512 ϕ clock cycles.

When a watchdog overflow reset is generated simultaneously with a reset input at the $\overline{\text{RES}}$ pin, the $\overline{\text{RES}}$ reset takes priority, and the WOVF bit is cleared to 0.

The following are not initialized a WDT reset signal:

- PFC (Pin Function Controller) function register
- I/O port register

Initializing is only possible by external power-on reset.

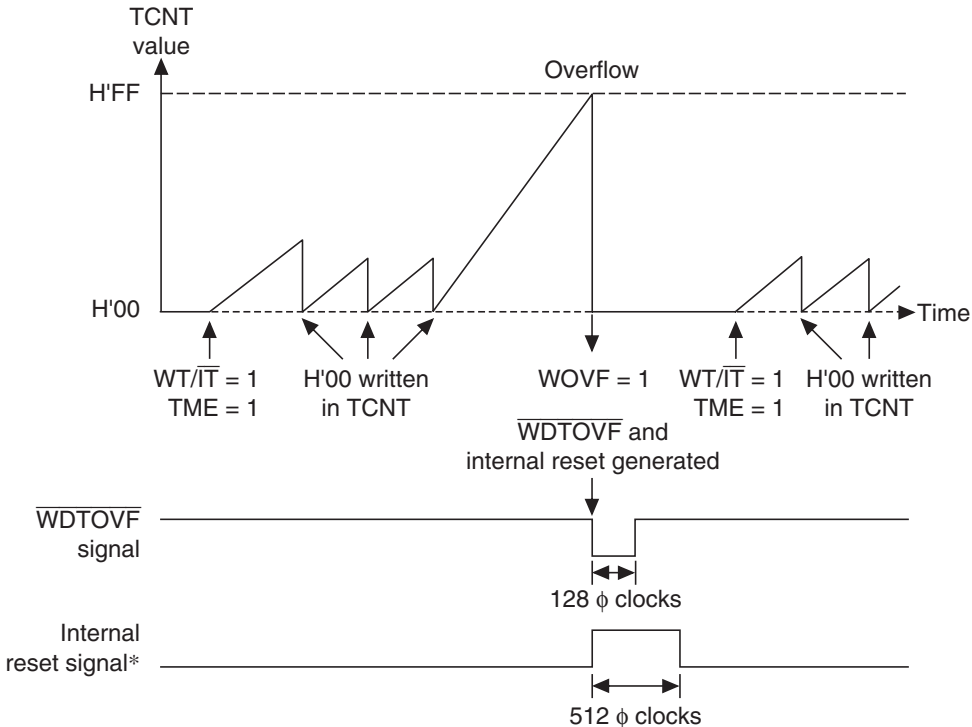

Legend:
WT/$\overline{IT}$: Timer mode select bit
TME: Timer enable bit

Note: * Internal reset signal occurs only when the RSTE bit is set to 1.

Figure 11.4 Operation in the Watchdog Timer Mode

11.3.2 Interval Timer Mode

To use the WDT as an interval timer, clear WT/$\overline{\text{IT}}$ to 0 and set TME to 1. An interval timer interrupt (ITI) is generated each time the timer counter overflows. This function can be used to generate interval timer interrupts at regular intervals (figure 11.5).

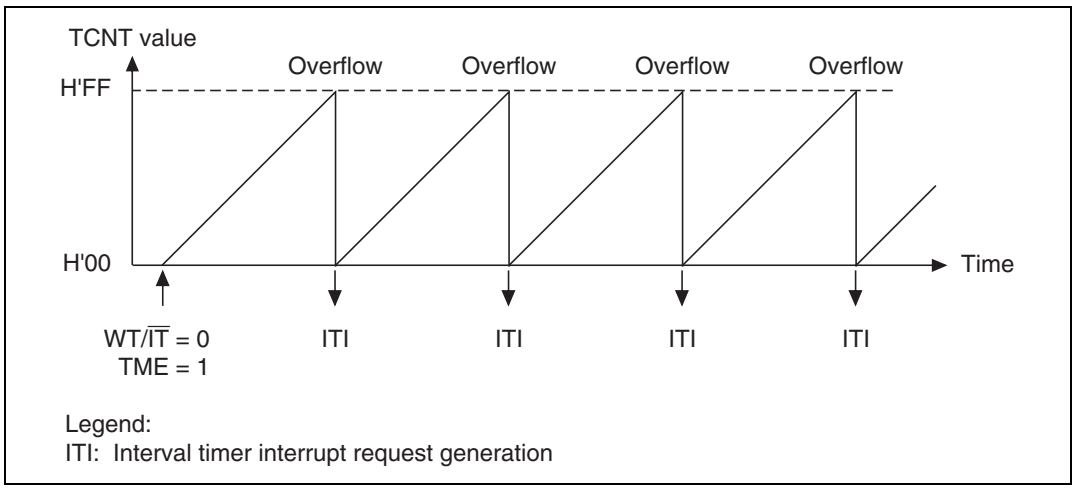

Figure 11.5 Operation in the Interval Timer Mode

11.3.3 Clearing the Standby Mode

The watchdog timer has a special function to clear the standby mode with an NMI interrupt. When using the standby mode, set the WDT as described below.

Before Transition to the Standby Mode: The TME bit in the TCSR must be cleared to 0 to stop the watchdog timer counter before it enters the standby mode. The chip cannot enter the standby mode while the TME bit is set to 1. Set bits CKS2 to CKS0 so that the counter overflow interval is equal to or longer than the oscillation settling time. See section 20.3, AC Characteristics, for the oscillation settling time.

Recovery from the Standby Mode: When an NMI request signal is received in standby mode, the clock oscillator starts running and the watchdog timer starts incrementing at the rate selected by bits CKS2 to CKS0 before the standby mode was entered. When the TCNT overflows (changes from H'FF to H'00), the clock is presumed to be stable and usable; clock signals are supplied to the entire chip and the standby mode ends.

For details on the standby mode, see section 19, Power Down State.

11.3.4 Timing of Setting the Overflow Flag (OVF)

In the interval timer mode, when the TCNT overflows, the OVF flag of the TCSR is set to 1 and an interval timer interrupt is simultaneously requested (figure 11.6).

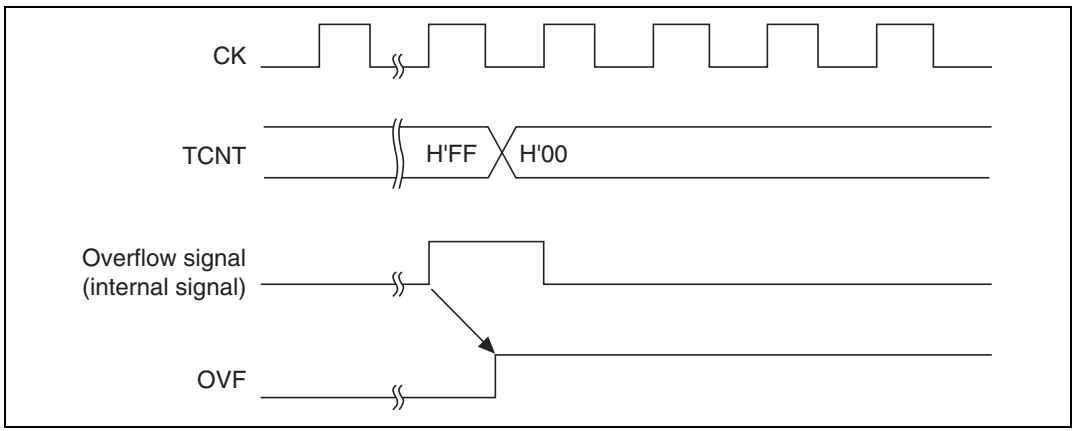

Figure 11.6 Timing of Setting the OVF

11.3.5 Timing of Setting the Watchdog Timer Overflow Flag (WOVF)

When the TCNT overflows in the watchdog timer mode, the WOVF bit of the RSTCSR is set to 1 and a $\overline{\text{WDTOVF}}$ signal is output. When the RSTE bit is set to 1, TCNT overflow enables an internal reset signal to be generated for the entire chip (figure 11.7).

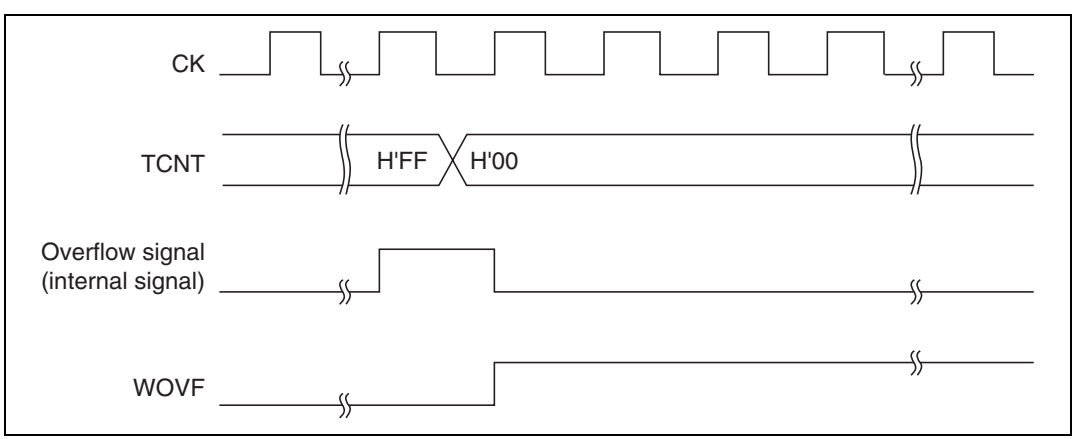

Figure 11.7 Timing of Setting the WOVF Bit

11.4 Usage Notes

11.4.1 TCNT Write and Increment Contention

If a timer counter increment clock pulse is generated during the T_3 state of a write cycle to the TCNT, the write takes priority and the timer counter is not incremented (figure 11.8).

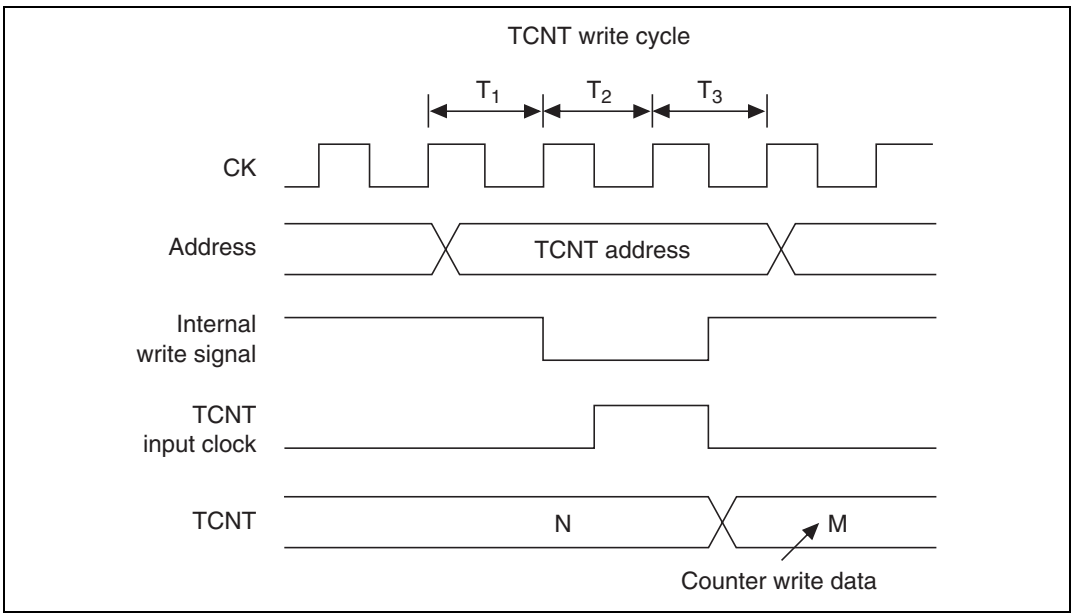

Figure 11.8 Contention between TCNT Write and Increment

11.4.2 Changing CKS2 to CKS0 Bit Values

If the values of bits CKS2 to CKS0 are altered while the WDT is running, the count may increment incorrectly. Always stop the watchdog timer (by clearing the TME bit to 0) before changing the values of bits CKS2 to CKS0.

11.4.3 Changing between Watchdog Timer/Interval Timer Modes

To prevent incorrect operation, always stop the watchdog timer (by clearing the TME bit to 0) before switching between interval timer mode and watchdog timer mode.

11.4.4 System Reset with $\overline{\text{WDTOVF}}$

If a $\overline{\text{WDTOVF}}$ signal is input to the $\overline{\text{RES}}$ pin, the LSI cannot initialize correctly.

Avoid logical input of the $\overline{\text{WDTOVF}}$ output signal to the $\overline{\text{RES}}$ input pin. To reset the entire system with the $\overline{\text{WDTOVF}}$ signal, use the circuit shown in figure 11.9.

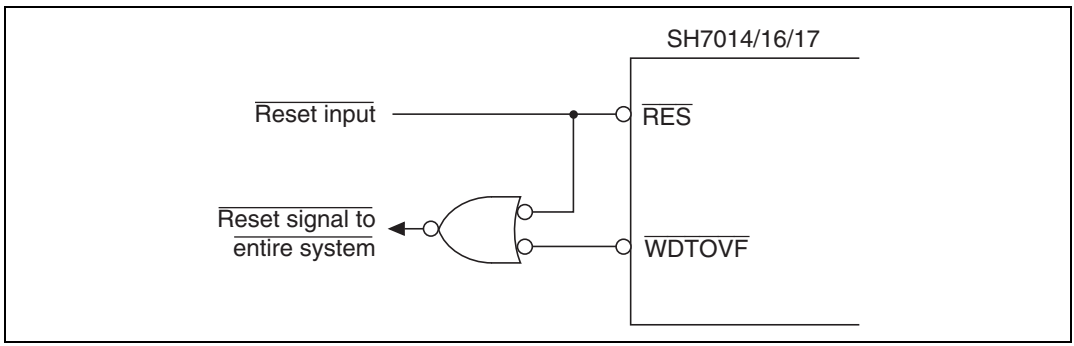

Figure 11.9 Example of a System Reset Circuit with a $\overline{\text{WDTOVF}}$ Signal

11.4.5 Internal Reset with the Watchdog Timer

If the RSTE bit is cleared to 0 in the watchdog timer mode, the LSI will not reset internally when a TCNT overflow occurs, but the TCNT and TCSR in the WDT will reset.

Section 12 Serial Communication Interface (SCI)

12.1 Overview

This LSI has a serial communication interface (SCI) with two independent channels, both of which possess the same functions.

The SCI supports both asynchronous and clock synchronous serial communication. It also has a multiprocessor communication function for serial communication among two or more processors.

12.1.1 Features

The SCI has the following features:

- Select asynchronous or clock synchronous as the serial communications mode.
  - — Asynchronous mode: Serial data communications are synched by start-stop in character units. The SCI can communicate with a universal asynchronous receiver/transmitter (UART), an asynchronous communication interface adapter (ACIA), or any other chip that employs a standard asynchronous serial communication. It can also communicate with two or more other processors using the multiprocessor communication function. There are twelve selectable serial data communication formats.
    - Data length: seven or eight bits
    - Stop bit length: one or two bits
    - Parity: even, odd, or none
    - Multiprocessor bit: one or none
    - Receive error detection: parity, overrun, and framing errors
    - Break detection: by reading the RxD level directly when a framing error occurs
  - — Clocked synchronous mode: Serial data communication is synchronized with a clock signal. The SCI can communicate with other chips having a clock synchronous communication function. There is one serial data communication format.
    - Data length: eight bits
    - Receive error detection: overrun errors
- Full duplex communication: The transmitting and receiving sections are independent, so the SCI can transmit and receive simultaneously. Both sections use double buffering, so continuous data transfer is possible in both the transmit and receive directions.
- On-chip baud rate generator with selectable bit rates.
- Internal or external transmit/receive clock source: baud rate generator (internal) or SCK pin (external).

- Four types of interrupts: Transmit-data-empty, transmit-end, receive-data-full, and receive-error interrupts are requested independently. The transmit-data-empty and receive-data-full interrupts can start the direct memory access controller (DMAC) to transfer data.

12.1.2 Block Diagram

Figure 12.1 shows a block diagram of the SCI.

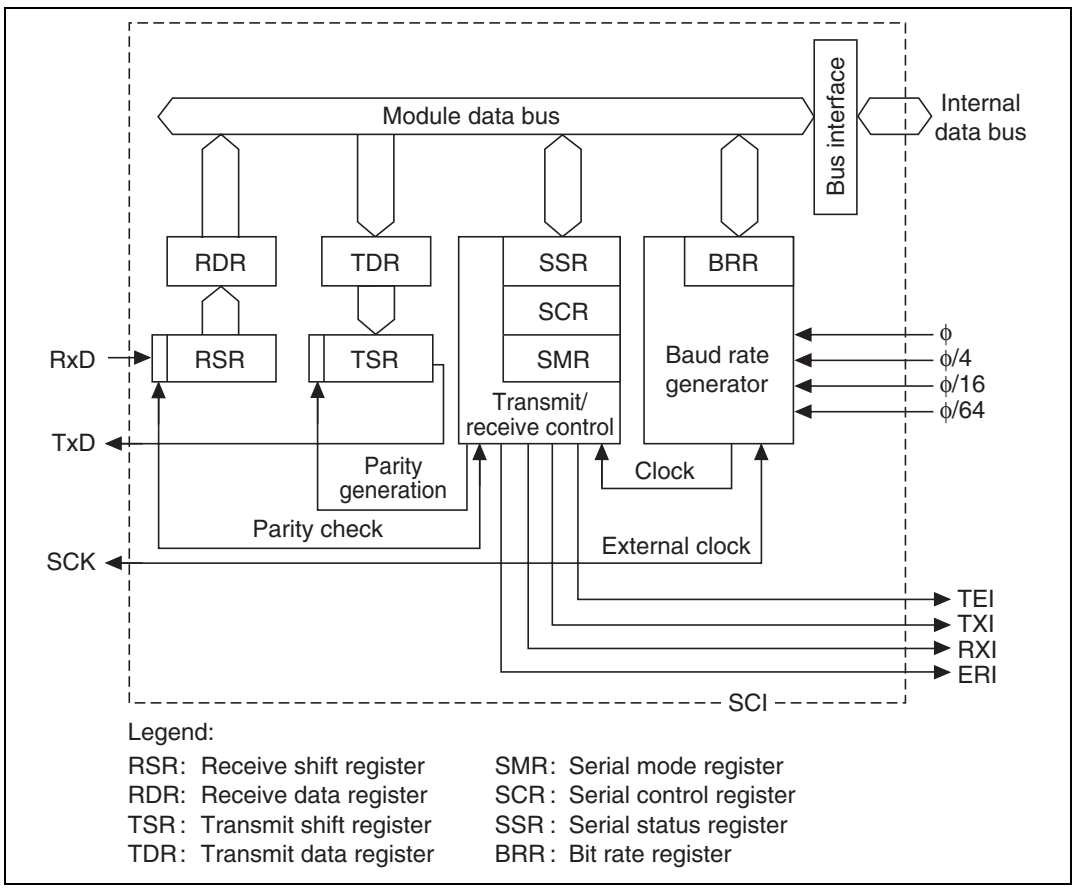

Figure 12.1 SCI Block Diagram

12.1.3 Pin Configuration

Table 12.1 summarizes the SCI pins by channel.

Table 12.1 SCI Pins

Channel	Pin Name	Abbreviation	Input/Output	Function
0	Serial clock pin	SCK0	Input/output	SCI0 clock input/output
	Receive data pin	RxD0	Input	SCI0 receive data input
	Transmit data pin	TxD0	Output	SCI0 transmit data output
1	Serial clock pin	SCK1	Input/output	SCI1 clock input/output
	Receive data pin	RxD1	Input	SCI1 receive data input
	Transmit data pin	TxD1	Output	SCI1 transmit data output

12.1.4 Register Configuration

Table 12.2 summarizes the SCI internal registers. These registers select the communication mode (asynchronous or clock synchronous), specify the data format and bit rate, and control the transmitter and receiver sections.

Table 12.2 Registers

Channel	Name	Abbreviation	R/W	Initial Value	Address*2	Access Size
0	Serial mode register	SMR0	R/W	H'00	H'FFFF81A0	8, 16
	Bit rate register	BRR0	R/W	H'FF	H'FFFF81A1	8, 16
	Serial control register	SCR0	R/W	H'00	H'FFFF81A2	8, 16
	Transmit data register	TDR0	R/W	H'FF	H'FFFF81A3	8, 16
	Serial status register	SSR0	R/(W)*1	H'84	H'FFFF81A4	8, 16
	Receive data register	RDR0	R	H'00	H'FFFF81A5	8, 16
1	Serial mode register	SMR1	R/W	H'00	H'FFFF81B0	8, 16
	Bit rate register	BRR1	R/W	H'FF	H'FFFF81B1	8, 16
	Serial control register	SCR1	R/W	H'00	H'FFFF81B2	8, 16
	Transmit data register	TDR1	R/W	H'FF	H'FFFF81B3	8, 16
	Serial status register	SSR1	R/(W)*1	H'84	H'FFFF81B4	8, 16
	Receive data register	RDR1	R	H'00	H'FFFF81B5	8, 16

Notes: 1. The only value that can be written is a 0 to clear the flags.
2. Do not access empty addresses.

12.2 Register Descriptions

12.2.1 Receive Shift Register (RSR)

Bit:	7	6	5	4	3	2	1	0
R/W:	—	—	—	—	—	—	—	—

The receive shift register (RSR) receives serial data. Data input at the RxD pin is loaded into the RSR in the order received, LSB (bit 0) first, converting the data to parallel form. When one byte has been received, it is automatically transferred to the RDR.

The CPU cannot read or write the RSR directly.

12.2.2 Receive Data Register (RDR)

Bit:	7	6	5	4	3	2	1	0
Initial value:	0	0	0	0	0	0	0	0
R/W:	R	R	R	R	R	R	R	R

The receive data register (RDR) stores serial receive data. The SCI completes the reception of one byte of serial data by moving the received data from the receive shift register (RSR) into the RDR for storage. The RSR is then ready to receive the next data. This double buffering allows the SCI to receive data continuously.

The CPU can read but not write the RDR. The RDR is initialized to H'00 by a power-on reset or in standby mode.

12.2.3 Transmit Shift Register (TSR)

Bit:	7	6	5	4	3	2	1	0
R/W:	—	—	—	—	—	—	—	—

The transmit shift register (TSR) transmits serial data. The SCI loads transmit data from the transmit data register (TDR) into the TSR, then transmits the data serially from the TxD pin, LSB (bit 0) first. After transmitting one data byte, the SCI automatically loads the next transmit data

from the TDR into the TSR and starts transmitting again. If the TDRE bit of the SSR is 1, however, the SCI does not load the TDR contents into the TSR.

The CPU cannot read or write the TSR directly.

12.2.4 Transmit Data Register (TDR)

Bit:	7	6	5	4	3	2	1	0
Initial value:	1	1	1	1	1	1	1	1
R/W:	R/W	R/W	R/W	R/W	R/W	R/W	R/W	R/W

The transmit data register (TDR) is an 8-bit register that stores data for serial transmission. When the SCI detects that the transmit shift register (TSR) is empty, it moves transmit data written in the TDR into the TSR and starts serial transmission. Continuous serial transmission is possible by writing the next transmit data in the TDR during serial transmission from the TSR.

The CPU can always read and write the TDR. The TDR is initialized to H'FF by a power-on reset or in standby mode.

12.2.5 Serial Mode Register (SMR)

Bit:	7	6	5	4	3	2	1	0
	C/$\overline{A}$	CHR	PE	O/$\overline{E}$	STOP	MP	CKS1	CKS0
Initial value:	0	0	0	0	0	0	0	0
R/W:	R/W	R/W	R/W	R/W	R/W	R/W	R/W	R/W

The serial mode register (SMR) is an 8-bit register that specifies the SCI serial communication format and selects the clock source for the baud rate generator.

The CPU can always read and write the SMR. The SMR is initialized to H'00 by a power-on reset or in standby mode.

Bit 7—Communication Mode (C/$\overline{A}$): Selects whether the SCI operates in the asynchronous or clock synchronous mode.

Bit 7 C/$\overline{A}$	Description	
0	Asynchronous mode	(initial value)
1	Clocked synchronous mode	

Bit 6—Character Length (CHR): Selects 7-bit or 8-bit data in the asynchronous mode. In the clock synchronous mode, the data length is always eight bits, regardless of the CHR setting.

Bit 6 CHR	Description	
0	Eight-bit data	(initial value)
1	Seven-bit data*	

Note: * When 7-bit data is selected, the MSB (bit 7) of the transmit data register is not transmitted.

Bit 5—Parity Enable (PE): Selects whether to add a parity bit to transmit data and to check the parity of receive data, in the asynchronous mode. In the clock synchronous mode, a parity bit is neither added nor checked, regardless of the PE setting.

Bit 5 PE	Description	
0	Parity bit not added or checked	(initial value)
1	Parity bit added and checked*	

Note: * When PE is set to 1, an even or odd parity bit is added to transmit data, depending on the parity mode (O/$\overline{E}$) setting. Receive data parity is checked according to the even/odd (O/$\overline{E}$) mode setting.

Bit 4—Parity Mode (O/$\overline{E}$): Selects even or odd parity when parity bits are added and checked. The O/$\overline{E}$ setting is used only in asynchronous mode and only when the parity enable bit (PE) is set to 1 to enable parity addition and check. The O/$\overline{E}$ setting is ignored in the clock synchronous mode, or in the asynchronous mode when parity addition and check is disabled.

Bit 4 O/$\overline{E}$	Description	
0	Even parity*[1]	(initial value)
1	Odd parity*[2]	

Notes: 1. If even parity is selected, the parity bit is added to transmit data to make an even number of 1s in the transmitted character and parity bit combined. Receive data is checked to see if it has an even number of 1s in the received character and parity bit combined.
2. If odd parity is selected, the parity bit is added to transmit data to make an odd number of 1s in the transmitted character and parity bit combined. Receive data is checked to see if it has an odd number of 1s in the received character and parity bit combined.

Bit 3—Stop Bit Length (STOP): Selects one or two bits as the stop bit length in the asynchronous mode. This setting is used only in the asynchronous mode. It is ignored in the clock synchronous mode because no stop bits are added.

Bit 3 STOP	Description	
0	One stop bit*[1]	(initial value)
1	Two stop bits*[2]	

Notes: 1. In transmitting, a single bit of 1 is added at the end of each transmitted character.
2. In transmitting, two bits of 1 are added at the end of each transmitted character.

In receiving, only the first stop bit is checked, regardless of the STOP bit setting. If the second stop bit is 1, it is treated as a stop bit, but if the second stop bit is 0, it is treated as the start bit of the next incoming character.

Bit 2—Multiprocessor Mode (MP): Selects multiprocessor format. When multiprocessor format is selected, settings of the parity enable (PE) and parity mode (O/$\overline{E}$) bits are ignored. The MP bit setting is used only in the asynchronous mode; it is ignored in the clock synchronous mode. For the multiprocessor communication function, see section 12.3.3, Multiprocessor Communication.

Bit 2 MP	Description	
0	Multiprocessor function disabled	(initial value)
1	Multiprocessor format selected	

Bits 1 and 0—Clock Select 1 and 0 (CKS1 and CKS0): These bits select the internal clock source of the on-chip baud rate generator. Four clock sources are available; ϕ, $\phi/4$, $\phi/16$, or $\phi/64$. For further information on the clock source, bit rate register settings, and baud rate, see section 12.2.8, Bit Rate Register.

Bit 1 CKS1	Bit 0 CKS0	Description	
0	0	ϕ	(initial value)
	1	$\phi/4$	
1	0	$\phi/16$	
	1	$\phi/64$	

12.2.6 Serial Control Register (SCR)

Bit:	7	6	5	4	3	2	1	0
	TIE	RIE	TE	RE	MPIE	TEIE	CKE1	CKE0
Initial value:	0	0	0	0	0	0	0	0
R/W:	R/W	R/W	R/W	R/W	R/W	R/W	R/W	R/W

The serial control register (SCR) operates the SCI transmitter/receiver, selects the serial clock output in the asynchronous mode, enables/disables interrupt requests, and selects the transmit/receive clock source. The CPU can always read and write the SCR. The SCR is initialized to H'00 by a power-on reset or in standby mode.

Bit 7—Transmit Interrupt Enable (TIE): Enables or disables the transmit-data-empty interrupt (TXI) requested when the transmit data register empty bit (TDRE) in the serial status register (SSR) is set to 1 by transfer of serial transmit data from the TDR to the TSR.

Bit 7 TIE	Description	
0	Transmit-data-empty interrupt request (TXI) is disabled*	(initial value)
1	Transmit-data-empty interrupt request (TXI) is enabled	

Note: * The TXI interrupt request can be cleared by reading TDRE after it has been set to 1, then clearing TDRE to 0, or by clearing TIE to 0.

Bit 6—Receive Interrupt Enable (RIE): Enables or disables the receive-data-full interrupt (RXI) requested when the receive data register full bit (RDRF) in the serial status register (SSR) is set to 1 by transfer of serial receive data from the RSR to the RDR. It also enables or disables receive-error interrupt (ERI) requests.

Bit 6 RIE	Description	
0	Receive-data-full interrupt (RXI) and receive-error interrupt (ERI) requests are disabled*	(initial value)
1	Receive-data-full interrupt (RXI) and receive-error interrupt (ERI) requests are enabled	

Note: * RXI and ERI interrupt requests can be cleared by reading the RDRF flag or error flag (FER, PER, or ORER) after it has been set to 1, then clearing the flag to 0, or by clearing RIE to 0.

Bit 5—Transmit Enable (TE): Enables or disables the SCI serial transmitter.

Bit 5 TE	Description	
0	Transmitter disabled*[1]	(initial value)
1	Transmitter enabled*[2]	

Notes: 1. The transmit data register empty bit (TDRE) in the serial status register (SSR) is locked at 1.

2. Serial transmission starts when the transmit data register empty (TDRE) bit in the serial status register (SSR) is cleared to 0 after writing of transmit data into the TDR. Select the transmit format in the SMR before setting TE to 1.

Bit 4—Receive Enable (RE): Enables or disables the SCI serial receiver.

Bit 4 RE	Description
0	Receiver disabled*[1] (initial value)
1	Receiver enabled*[2]

Notes: 1. Clearing RE to 0 does not affect the receive flags (RDRF, FER, PER, ORER). These flags retain their previous values.
2. Serial reception starts when a start bit is detected in the asynchronous mode, or synchronous clock input is detected in the clock synchronous mode. Select the receive format in the SMR before setting RE to 1.

Bit 3—Multiprocessor Interrupt Enable (MPIE): Enables or disables multiprocessor interrupts. The MPIE setting is used only in the asynchronous mode, and only if the multiprocessor mode bit (MP) in the serial mode register (SMR) is set to 1 during reception. The MPIE setting is ignored in the clock synchronous mode or when the MP bit is cleared to 0.

Bit 3 MPIE	Description
0	Multiprocessor interrupts are disabled (normal receive operation) (initial value) MPIE is cleared when the MPIE bit is cleared to 0, or the multiprocessor bit (MPB) is set to 1 in receive data.
1	Multiprocessor interrupts are enabled* Receive-data-full interrupt requests (RXI), receive-error interrupt requests (ERI), and setting of the RDRF, FER, and ORER status flags in the serial status register (SSR) are disabled until data with the multiprocessor bit set to 1 is received.

Note: * The SCI does not transfer receive data from the RSR to the RDR, does not detect receive errors, and does not set the RDRF, FER, and ORER flags in the serial status register (SSR). When it receives data that includes MPB = 1, MPB is set to 1, and the SCI automatically clears MPIE to 0, generates RXI and ERI interrupts (if the TIE and RIE bits in the SCR are set to 1), and allows the FER and ORER bits to be set.

Bit 2—Transmit-End Interrupt Enable (TEIE): Enables or disables the transmit-end interrupt (TEI) requested if TDR does not contain valid transmit data when the MSB is transmitted.

Bit 2 TEIE	Description	
0	Transmit-end interrupt (TEI) requests are disabled*	(initial value)
1	Transmit-end interrupt (TEI) requests are enabled.*	

Note: * The TEI request can be cleared by reading the TDRE bit in the serial status register (SSR) after it has been set to 1, then clearing TDRE to 0 and clearing the transmit end (TEND) bit to 0; or by clearing the TEIE bit to 0.

Bits 1 and 0—Clock Enable 1 and 0 (CKE1 and CKE0): These bits select the SCI clock source and enable or disable clock output from the SCK pin. Depending on the combination of CKE1 and CKE0, the SCK pin can be used for serial clock output, or serial clock input. Select the SCK pin function by using the pin function controller (PFC).

The CKE0 setting is valid only in the asynchronous mode, and only when the SCI is internally clocked (CKE1 = 0). The CKE0 setting is ignored in the clock synchronous mode, or when an external clock source is selected (CKE1 = 1). Select the SCI operating mode in the serial mode register (SMR) before setting CKE1 and CKE0. For further details on selection of the SCI clock source, see table 12.9 in section 12.3, Operation.

Bit 1 CKE1	Bit 0 CKE0	Description*[1]	
0	0	Asynchronous mode	Internal clock, SCK pin used for input pin (input signal is ignored) or output pin (output level is undefined) *[2]
		Clock synchronous mode	Internal clock, SCK pin used for synchronous clock output*[2]
0	1	Asynchronous mode	Internal clock, SCK pin used for clock output*[3]
		Clock synchronous mode	Internal clock, SCK pin used for synchronous clock output
1	0	Asynchronous mode	External clock, SCK pin used for clock input*[4]
		Clock synchronous mode	External clock, SCK pin used for synchronous clock input
1	1	Asynchronous mode	External clock, SCK pin used for clock input*[4]
		Clock synchronous mode	External clock, SCK pin used for synchronous clock input

Notes:
1. The SCK pin is multiplexed with other functions. Use the pin function controller (PFC) to select the SCK function for this pin, as well as the I/O direction.
2. Initial value.
3. The output clock frequency is the same as the bit rate.
4. The input clock frequency is 16 times the bit rate.

12.2.7 Serial Status Register (SSR)

The serial status register (SSR) is an 8-bit register containing multiprocessor bit values, and status flags that indicate SCI operating status.

The CPU can always read and write the SSR, but cannot write 1 in the status flags (TDRE, RDRF, ORER, PER, and FER). These flags can be cleared to 0 only if they have first been read (after being set to 1). Bits 2 (TEND) and 1 (MPB) are read-only bits that cannot be written. The SSR is initialized to H'84 by a power-on reset or in standby mode.

Bit:	7	6	5	4	3	2	1	0
	TDRE	RDRF	ORER	FER	PER	TEND	MPB	MPBT
Initial value:	1	0	0	0	0	1	0	0
R/W:	R/(W)*	R/(W)*	R/(W)*	R/(W)*	R/(W)*	R	R	R/W

Note: * The only value that can be written is a 0 to clear the flag.

Bit 7—Transmit Data Register Empty (TDRE): Indicates that the SCI has loaded transmit data from the TDR into the TSR and new serial transmit data can be written in the TDR.

Bit 7 TDRE	Description
0	TDR contains valid transmit data [Clearing conditions] • When 0 is written to TDRE after reading TDRE = 1 • When DMAC writes data in TDR
1	TDR does not contain valid transmit data (initial value) [Setting conditions] • Power-on reset or standby mode • When the TE bit in SCR is 0 • When data is transferred from TDR to TSR and data can be written to TDR

Bit 6—Receive Data Register Full (RDRF): Indicates that RDR contains received data.

Bit 6 RDRF	Description
0	RDR does not contain valid received data (initial value) [Clearing conditions] • Power-on reset or standby mode • When 0 is written to RDRF after reading RDRF = 1 • When DMAC reads data from RDR
1	RDR contains valid received data [Setting condition] When serial reception ends normally and receive data is transferred from RSR to RDR

Note: The RDR and RDRF are not affected by detection of receive errors or by clearing of the RE bit to 0 in the serial control register. They retain their previous contents. If RDRF is still set to 1 when reception of the next data ends, an overrun error (ORER) occurs and the received data is lost.

Bit 5—Overrun Error (ORER): Indicates that data reception ended abnormally due to an overrun error.

Bit 5 ORER	Description
0	Receiving is in progress or has ended normally*[1] (initial value) [Clearing conditions] • Power-on reset or standby mode • When 0 is written to ORER after reading ORER = 1
1	A receive overrun error occurred [Setting condition] When the next serial reception is completed while RDRF = 1*[2]

Notes: 1. The ORER flag is not affected and retains their previous values when the RE bit in SCR is cleared to 0.
2. RDR continues to hold the data received before the overrun error, so subsequent receive data is lost. Serial receiving cannot continue while ORER is set to 1. In the clock synchronous mode, serial transmitting is disabled.

Bit 4—Framing Error (FER): Indicates that data reception ended abnormally due to a framing error in the asynchronous mode.

Bit 4 FER	Description
0	Receiving is in progress or has ended normally*[1] (initial value) [Clearing conditions] • Power-on reset or standby mode • When 0 is written to FER after reading FER = 1
1	A receive framing error occurred*[2] [Setting condition] When at the end of an SCI receive operation the final stop bit of the receive data is checked and its value*[2] is 0

Notes: 1. The FER flag is not affected and retains their previous values when the RE bit in SCR is cleared to 0.
2. When the stop bit length is two bits, only the first bit is checked to see if it is a 1. The second stop bit is not checked. When a framing error occurs, the SCI transfers the receive data into the RDR but does not set RDRF. Serial receiving cannot continue while FER is set to 1. In the clock synchronous mode, serial transmitting is also disabled. In addition, serial transmission cannot continue in clock synchronous mode.

Bit 3—Parity Error (PER): Indicates that data reception (with parity) ended abnormally due to a parity error in the asynchronous mode.

Bit 3 PER	Description
0	Receiving is in progress or has ended normally*[1] (initial value) [Clearing conditions] • Power-on reset or standby mode • When 0 is written to PER after reading PER = 1
1	A receive parity error occurred*[2] [Setting condition] PER is set to 1 if the number of 1s in receive data, including the parity bit, does not match the even or odd parity setting of the parity mode bit (O/$\overline{E}$) in the serial mode register (SMR)

Notes: 1. The PER flag is not affected and retains their previous values when the RE bit in SCR is cleared to 0.
2. When a parity error occurs, the SCI transfers the receive data into the RDR but does not set RDRF. Serial receiving cannot continue while PER is set to 1. In the clock synchronous mode, serial transmitting is also disabled. In addition, serial transmission cannot continue in clock synchronous mode.

Bit 2—Transmit End (TEND): Indicates that when the last bit of a serial character was transmitted, the TDR did not contain valid data, so transmission has ended. TEND is a read-only bit and cannot be written.

Bit 2 TEND	Description	
0	Transmission is in progress [Clearing conditions] • When 0 is written to TDRE after reading TDRE = 1 • When DMAC writes data in TDR	
1	End of transmission [Setting conditions] • Power-on reset or standby mode • When the TE bit in SCR is 0 • When TDRE = 1 at transmission of the last bit of a 1-byte serial transmit character	(initial value)

Bit 1—Multiprocessor Bit (MPB): Stores the value of the multiprocessor bit in receive data when a multiprocessor format is selected for receiving in the asynchronous mode. The MPB is a read-only bit and cannot be written.

Bit 1 MPB	Description	
0	Multiprocessor bit value in receive data is 0*	(initial value)
1	Multiprocessor bit value in receive data is 1	

Note: * If RE is cleared to 0 when a multiprocessor format is selected, the MPB retains its previous value.

Bit 0—Multiprocessor Bit Transfer (MPBT): Stores the value of the multiprocessor bit added to transmit data when a multiprocessor format is selected for transmitting in the asynchronous mode. The MPBT setting is ignored in the clock synchronous mode, when a multiprocessor format is not selected, or when the SCI is not transmitting.

Bit 0 MPBT	Description	
0	Multiprocessor bit value in transmit data is 0	(initial value)
1	Multiprocessor bit value in transmit data is 1	

12.2.8 Bit Rate Register (BRR)

The bit rate register (BRR) is an 8-bit register that, together with the baud rate generator clock source selected by the CKS1 and CKS0 bits in the serial mode register (SMR), determines the serial transmit/receive bit rate.

The CPU can always read and write the BRR. The BRR is initialized to H'FF by a power-on reset or in standby mode. Each channel has independent baud rate generator control, so different values can be set in the two channels.

Bit:	7	6	5	4	3	2	1	0
Initial value:	1	1	1	1	1	1	1	1
R/W:	R/W	R/W	R/W	R/W	R/W	R/W	R/W	R/W

Table 12.3 lists examples of BRR settings in the asynchronous mode; table 12.4 lists examples of BBR settings in the clock synchronous mode.

Table 12.3 Bit Rates and BRR Settings in Asynchronous Mode

Bit Rate (Bits/s)	ϕ (MHz)								
	4			4.9152			6		
	n	N	Error (%)	n	N	Error (%)	n	N	Error (%)
110	2	70	0.03	2	86	0.31	2	106	–0.44
150	1	207	0.16	1	255	0.00	2	77	0.16
300	1	103	0.16	1	127	0.00	1	155	0.16
600	0	207	0.16	0	255	0.00	1	77	0.16
1200	0	103	0.16	0	127	0.00	0	155	0.16
2400	0	51	0.16	0	63	0.00	0	77	0.16
4800	0	25	0.16	0	31	0.00	0	38	0.16
9600	0	12	0.16	0	15	0.00	0	19	–2.34
14400	0	8	–3.55	0	10	–3.03	0	12	0.16
19200	0	6	–6.99	0	7	0.00	0	9	–2.34
28800	0	3	8.51	0	4	6.67	0	6	–6.99
31250	0	3	0.00	0	4	–1.70	0	5	0.00
38400	0	2	8.51	0	3	0.00	0	4	–2.34

Bit Rate (Bits/s)	ϕ (MHz)								
	7.3728			8			9.8304		
	n	N	Error (%)	n	N	Error (%)	n	N	Error (%)
110	2	130	–0.07	2	141	0.03	2	174	–0.26
150	2	95	0.00	2	103	0.16	2	127	0.00
300	1	191	0.00	1	207	0.16	1	255	0.00
600	1	95	0.00	1	103	0.16	1	127	0.00
1200	0	191	0.00	0	207	0.16	0	255	0.00
2400	0	95	0.00	0	103	0.16	0	127	0.00
4800	0	47	0.00	0	51	0.16	0	63	0.00
9600	0	23	0.00	0	25	0.16	0	31	0.00
14400	0	15	0.00	0	16	2.12	0	20	1.59
19200	0	11	0.00	0	12	0.16	0	15	0.00
28800	0	7	0.00	0	8	–3.55	0	10	–3.03
31250	0	6	5.33	0	7	0.00	0	9	–1.70
38400	0	5	0.00	0	6	–6.99	0	7	0.00

Bit Rate (Bits/s)	ϕ (MHz)								
	10			11.0592			12		
	n	N	Error (%)	n	N	Error (%)	n	N	Error (%)
110	2	177	–0.25	2	195	0.19	2	212	0.03
150	2	129	0.16	2	143	0.00	2	155	0.16
300	2	64	0.16	2	71	0.00	2	77	0.16
600	1	129	0.16	1	143	0.00	1	155	0.16
1200	1	64	0.16	1	71	0.00	1	77	0.16
2400	0	129	0.16	0	143	0.00	0	155	0.16
4800	0	64	0.16	0	71	0.00	0	77	0.16
9600	0	32	–1.36	0	35	0.00	0	38	0.16
14400	0	21	–1.36	0	23	0.00	0	25	0.16
19200	0	15	1.73	0	17	0.00	0	19	–2.34
28800	0	10	–1.36	0	11	0.00	0	12	0.16
31250	0	9	0.00	0	10	0.54	0	11	0.00
38400	0	7	1.73	0	8	0.00	0	9	–2.34

Bit Rate (Bits/s)	φ (MHz)								
	12.288			14			14.7456		
	n	N	Error (%)	n	N	Error (%)	n	N	Error (%)
110	2	217	0.08	2	248	–0.17	3	64	0.70
150	2	159	0.00	2	181	0.16	2	191	0.00
300	2	79	0.00	2	90	0.16	2	95	0.00
600	1	159	0.00	1	181	0.16	1	191	0.00
1200	1	79	0.00	1	90	0.16	1	95	0.00
2400	0	159	0.00	0	181	0.16	0	191	0.00
4800	0	79	0.00	0	90	0.16	0	95	0.00
9600	0	39	0.00	0	45	–0.93	0	47	0.00
14400	0	26	–1.23	0	29	1.27	0	31	0.00
19200	0	19	0.00	0	22	–0.93	0	23	0.00
28800	0	12	2.56	0	14	1.27	0	15	0.00
31250	0	11	2.40	0	13	0.00	0	14	–1.70
38400	0	9	0.00	0	10	3.57	0	11	0.00

Bit Rate (Bits/s)	φ (MHz)								
	16			17.2032			18		
	n	N	Error (%)	n	N	Error (%)	n	N	Error (%)
110	3	70	0.03	3	75	0.48	3	79	–0.12
150	2	207	0.16	2	223	0.00	2	233	0.16
300	2	103	0.16	2	111	0.00	2	116	0.16
600	1	207	0.16	1	223	0.00	1	233	0.16
1200	1	103	0.16	1	111	0.00	1	116	0.16
2400	0	207	0.16	0	223	0.00	0	233	0.16
4800	0	103	0.16	0	111	0.00	0	116	0.16
9600	0	51	0.16	0	55	0.00	0	58	–0.69
14400	0	34	–0.79	0	36	0.90	0	38	0.16
19200	0	25	0.16	0	27	0.00	0	28	1.02
28800	0	16	2.12	0	18	–1.75	0	19	–2.34
31250	0	15	0.00	0	16	1.20	0	17	0.00
38400	0	12	0.16	0	13	0.00	0	14	–2.34

Bit Rate (Bits/s)	ϕ (MHz)								
	18.432			19.6608			20		
	n	N	Error (%)	n	N	Error (%)	n	N	Error (%)
110	3	81	–0.22	3	86	0.31	3	88	–0.25
150	2	239	0.00	2	255	0.00	3	64	0.16
300	2	119	0.00	2	127	0.00	2	129	0.16
600	1	239	0.00	1	255	0.00	2	64	0.16
1200	1	119	0.00	1	127	0.00	1	129	0.16
2400	0	239	0.00	0	255	0.00	1	64	0.16
4800	0	119	0.00	0	127	0.00	0	129	0.16
9600	0	59	0.00	0	63	0.00	0	64	0.16
14400	0	39	0.00	0	42	–0.78	0	42	0.94
19200	0	29	0.00	0	31	0.00	0	32	–1.36
28800	0	19	0.00	0	20	1.59	0	21	–1.36
31250	0	17	2.40	0	19	–1.70	0	19	0.00
38400	0	14	0.00	0	15	0.00	0	15	1.73

Bit Rate (Bits/s)	ϕ (MHz)								
	22			22.1184			24		
	n	N	Error (%)	n	N	Error (%)	n	N	Error (%)
110	3	97	–0.35	3	97	0.19	3	106	–0.44
150	3	71	–0.54	3	71	0.00	3	77	0.16
300	2	142	0.16	2	143	0.00	2	155	0.16
600	2	71	–0.54	2	71	0.00	2	77	0.16
1200	1	142	0.16	1	143	0.00	1	155	0.16
2400	1	71	–0.54	1	71	0.00	1	77	0.16
4800	0	142	0.16	0	143	0.00	0	155	0.16
9600	0	71	–0.54	0	71	0.00	0	77	0.16
14400	0	47	–0.54	0	47	0.00	0	51	0.16
19200	0	35	–0.54	0	35	0.00	0	38	0.16
28800	0	23	–0.54	0	23	0.00	0	25	0.16
31250	0	21	0.00	0	21	0.54	0	23	0.00
38400	0	17	–0.54	0	17	0.00	0	19	–2.34

Bit Rate (Bits/s)	ϕ (MHz)								
	24.576			25.8048			26		
	n	N	Error (%)	n	N	Error (%)	n	N	Error (%)
110	3	108	0.08	3	114	–0.40	3	114	0.36
150	3	79	0.00	3	83	0.00	3	84	–0.43
300	2	159	0.00	2	167	0.00	2	168	0.16
600	2	79	0.00	2	83	0.00	2	84	–0.43
1200	1	159	0.00	1	167	0.00	1	168	0.16
2400	1	79	0.00	1	83	0.00	1	84	–0.43
4800	0	159	0.00	0	167	0.00	0	168	0.16
9600	0	79	0.00	0	83	0.00	0	84	–0.43
14400	0	52	0.63	0	55	0.00	0	55	0.76
19200	0	39	0.00	0	41	0.00	0	41	0.76
28800	0	26	–1.23	0	27	0.00	0	27	0.76
31250	0	24	–1.70	0	25	–0.75	0	25	0.00
38400	0	19	0.00	0	20	0.00	0	20	0.76

Bit Rate (Bits/s)	ϕ (MHz)					
	27.0336			28		
	n	N	Error (%)	n	N	Error (%)
110	3	119	0.00	3	123	0.23
150	3	87	0.00	3	90	0.16
300	2	175	0.00	2	181	0.16
600	2	87	0.00	2	90	0.16
1200	1	175	0.00	1	181	0.16
2400	1	87	0.00	1	90	0.16
4800	0	175	0.00	0	181	0.16
9600	0	87	0.00	0	90	0.16
14400	0	58	–0.56	0	60	–0.39
19200	0	43	0.00	0	45	–0.93
28800	0	28	1.15	0	29	1.27
31250	0	26	0.12	0	27	0.00
38400	0	21	0.00	0	22	–0.93

Table 12.4 Bit Rates and BRR Settings in Clocked Synchronous Mode

Bit Rate (Bits/s)	ϕ (MHz)							
	4		8		10		12	
	n	N	n	N	n	N	n	N
110	3	141						
250	2	249	3	124	3	155	3	187
500	2	124	2	249	3	77	3	93
1k	1	249	2	124	2	155	2	187
2.5k	1	99	1	199	1	249	2	74
5k	0	199	1	99	1	124	1	149
10k	0	99	0	199	0	249	1	74
25k	0	39	0	79	0	99	0	119
50k	0	19	0	39	0	49	0	59
100k	0	9	0	19	0	24	0	29
250k	0	3	0	7	0	9	0	11
500k	0	1	0	3	0	4	0	5
1M	0	0*	0	1	—	—	0	2
2.5M					0	0*	0	0*
5M								

Bit Rate (Bits/s)	ϕ (MHz)							
	16		20		24		28	
	n	N	n	N	n	N	n	N
110								
250	3	249						
500	3	124	3	155	3	187	3	218
1k	2	249	3	77	3	93	3	108
2.5k	2	99	2	124	2	149	2	174
5k	1	199	1	249	2	74	2	87
10k	1	99	1	124	1	149	1	174
25k	0	159	0	199	0	239	1	69
50k	0	79	0	99	0	119	0	139
100k	0	39	0	49	0	59	0	69
250k	0	15	0	19	0	23	0	27
500k	0	7	0	9	0	11	0	13
1M	0	3	0	4	0	5	0	6
2.5M	—	—	0	1	—	—	0	2
5M			0	0*	—	—	0	1
7M					—	—	0	0*

Legend:

Blank: No setting available

—: Setting possible, but error occurs

Notes: Settings with an error of 1% or less are recommended.

* Continuous transmission/reception is not possible.

The BRR setting is calculated as follows:

Asynchronous mode:

$$N = \frac{\phi}{64 \times 2^{2n-1} \times B} \times 10^6 - 1$$

Synchronous mode:

$$N = \frac{\phi}{64 \times 2^{2n-1} \times B} \times 10^6 - 1$$

Legend:
B: Bit rate (bit/s)
N: Baud rate generator BRR setting ($0 \leq N \leq 255$)
ϕ: Operating frequency (MHz)
n: Baud rate generator input clock (n = 0 to 3)
(See the following table for the clock sources and value of n.)

		SMR Settings	
n	**Clock Source**	**CKS1**	**CKS2**
0	ϕ	0	0
1	$\phi/4$	0	1
2	$\phi/16$	1	0
3	$\phi/64$	1	1

The bit rate error in asynchronous mode is calculated as follows:

$$\text{Error (\%)} = \left\{ \frac{\phi \times 10^6}{(N + 1) \times B \times 64 \times 2^{2n-1}} - 1 \right\} \times 100$$

Table 12.5 indicates the maximum bit rates in the asynchronous mode when the baud rate generator is being used for various frequencies. Tables 12.6 and 12.7 show the maximum rates for external clock input.

Table 12.5 Maximum Bit Rates for Various Frequencies with Baud Rate Generator (Asynchronous Mode)

		Settings	
ϕ (MHz)	**Maximum Bit Rate (Bits/s)**	**n**	**N**
4	125000	0	0
4.9152	153600	0	0
6	187500	0	0
7.3728	230400	0	0
8	250000	0	0
9.8304	307200	0	0
10	312500	0	0
11.0592	345600	0	0
12	375000	0	0
12.288	384000	0	0
14	437500	0	0
14.7456	460800	0	0
16	500000	0	0
17.2032	537600	0	0
18	562500	0	0
18.432	576000	0	0
19.6608	614400	0	0
20	625000	0	0
22	687500	0	0
22.1184	691200	0	0
24	750000	0	0
24.576	768000	0	0
25.8048	806400	0	0
26	812500	0	0
27.0336	844800	0	0
28	875000	0	0

Table 12.6 Maximum Bit Rates during External Clock Input (Asynchronous Mode)

ϕ (MHz)	External Input Clock (MHz)	Maximum Bit Rate (Bits/s)
4	1.0000	62500
4.9152	1.2288	76800
6	1.5000	93750
7.3728	1.8432	115200
8	2.0000	125000
9.8304	2.4576	153600
10	2.5000	156250
11.0592	2.7648	172800
12	3.0000	187500
12.288	3.0720	192000
14	3.5000	218750
14.7456	3.6864	230400
16	4.0000	250000
17.2032	4.3008	268800
18	4.5000	281250
18.432	4.6080	288000
19.6608	4.9152	307200
20	5.0000	312500
22	5.5000	343750
22.1184	5.5296	345600
24	6.0000	375000
24.576	6.1440	384000
25.8048	6.4512	403200
26	6.5000	406250
27.0336	6.7584	422400
28	7.0000	437500

Table 12.7 Maximum Bit Rates during External Clock Input (Clock Synchronous Mode)

ϕ (MHz)	External Input Clock (MHz)	Maximum Bit Rate (Bits/s)
4	0.6667	666666.7
6	1.0000	1000000.0
8	1.3333	1333333.3
10	1.6667	1666666.7
12	2.0000	2000000.0
14	2.3333	2333333.3
16	2.6667	2666666.7
18	3.0000	3000000.0
20	3.3333	3333333.3
22	3.6667	3666666.7
24	4.0000	4000000.0
26	4.3333	4333333.3
28	4.6667	4666666.7

12.3 Operation

12.3.1 Overview

For serial communication, the SCI has an asynchronous mode in which characters are synchronized individually, and a clock synchronous mode in which communication is synchronized with clock pulses. Asynchronous/clock synchronous mode and the transmission format are selected in the serial mode register (SMR), as shown in table 12.8. The SCI clock source is selected by the C/$\overline{A}$ bit in the serial mode register (SMR) and the CKE1 and CKE0 bits in the serial control register (SCR), as shown in table 12.9.

Asynchronous Mode:

- Data length is selectable: seven or eight bits.
- Parity and multiprocessor bits are selectable, as well as the stop bit length (one or two bits). These selections determine the transmit/receive format and character length.
- In receiving, it is possible to detect framing errors (FER), parity errors (PER), overrun errors (ORER), and the break state.
- An internal or external clock can be selected as the SCI clock source.
  - When an internal clock is selected, the SCI operates using the on-chip baud rate generator clock, and can output a clock with a frequency matching the bit rate.
  - When an external clock is selected, the external clock input must have a frequency 16 times the bit rate. (The on-chip baud rate generator is not used.)

Clock Synchronous Mode:

- The communication format has a fixed 8-bit data length.
- In receiving, it is possible to detect overrun errors (ORER).
- An internal or external clock can be selected as the SCI clock source.
  - When an internal clock is selected, the SCI operates using the on-chip baud rate generator clock, and outputs a synchronous clock signal to external devices.
  - When an external clock is selected, the SCI operates on the input synchronous clock. The on-chip baud rate generator is not used.

Table 12.8 SMR Settings and SCI Communication Formats

	SMR Settings					SCI Communication Format			
Mode	**Bit 7 C/$\overline{A}$**	**Bit 6 CHR**	**Bit 5 PE**	**Bit 2 MP**	**Bit 3 STOP**	**Data Length**	**Parity Bit**	**Multipro-cessor Bit**	**Stop Bit Length**
Asynchronous	0	0	0	0	0	8-bit	Not set	Not set	1 bit
					1				2 bits
			1		0		Set		1 bit
					1				2 bits
		1	0		0	7-bit	Not set		1 bit
					1				2 bits
			1		0		Set		1 bit
					1				2 bits
Asynchronous (multiprocessor format)		0	*	1	0	8-bit	Not set	Set	1 bit
			*		1				2 bits
		1	*		0	7-bit			1 bit
			*		1				2 bits
Clock synchronous	1	*	*	*	*	8-bit		Not set	None

Note: Asterisks (*) in the table indicate don't-care bits.

Table 12.9 SMR and SCR Settings and SCI Clock Source Selection

	SMR	SCR Settings		SCI Transmit/Receive Clock	
Mode	**Bit 7 C/$\overline{A}$**	**Bit 1 CKE1**	**Bit 0 CKE0**	**Clock Source**	**SCK Pin Function***
Asynchronous	0	0	0	Internal	SCI does not use the SCK pin
			1		Outputs a clock with frequency matching the bit rate
		1	0	External	Inputs a clock with frequency 16 times the bit rate
			1		
Clock synchronous	1	0	0	Internal	Outputs the synchronous clock
			1		
		1	0	External	Inputs the synchronous clock
			1		

Note: * Select the function in combination with the pin function controller (PFC).

12.3.2 Operation in Asynchronous Mode

In the asynchronous mode, each transmitted or received character begins with a start bit and ends with a stop bit. Serial communication is synchronized one character at a time.

The transmitting and receiving sections of the SCI are independent, so full duplex communication is possible. The transmitter and receiver are both double buffered, so data can be written and read while transmitting and receiving are in progress, enabling continuous transmitting and receiving.

Figure 12.2 shows the general format of asynchronous serial communication. In asynchronous serial communication, the communication line is normally held in the marking (high) state. The SCI monitors the line and starts serial communication when the line goes to the space (low) state, indicating a start bit. One serial character consists of a start bit (low), data (LSB first), parity bit (high or low), and stop bit (high), in that order.

When receiving in the asynchronous mode, the SCI synchronizes on the falling edge of the start bit. The SCI samples each data bit on the eighth pulse of a clock with a frequency 16 times the bit rate. Receive data is latched at the center of each bit.

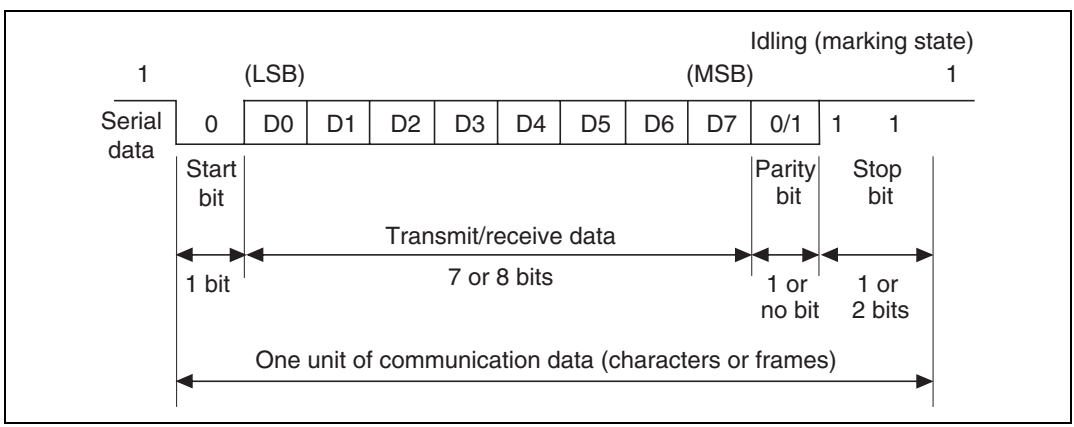

Figure 12.2 Data Format in Asynchronous Communication (Example: 8-bit Data with Parity and Two Stop Bits)

Transmit/Receive Formats: Table 12.10 shows the 12 communication formats that can be selected in the asynchronous mode. The format is selected by settings in the serial mode register (SMR).

Table 12.10 Serial Communication Formats (Asynchronous Mode)

SMR Bits				Serial Transmit/Receive Format and Frame Length											
CHR	PE	MP	STOP	1	2	3	4	5	6	7	8	9	10	11	12
0	0	0	0	START	8-Bit data								STOP		
0	0	0	1	START	8-Bit data								STOP	STOP	
0	1	0	0	START	8-Bit data								P	STOP	
0	1	0	1	START	8-Bit data								P	STOP	STOP
1	0	0	0	START	7-Bit data							STOP			
1	0	0	1	START	7-Bit data							STOP	STOP		
1	1	0	0	START	7-Bit data							P	STOP		
1	1	0	1	START	7-Bit data							P	STOP	STOP	
0	—	1	0	START	8-Bit data								MPB	STOP	
0	—	1	1	START	8-Bit data								MPB	STOP	STOP
1	—	1	0	START	7-Bit data							MPB	STOP		
1	—	1	1	START	7-Bit data							MPB	STOP	STOP	

Legend:
START: Start bit
STOP: Stop bit
P: Parity bit
MPB: Multiprocessor bit
—: Don't care

Clock: An internal clock generated by the on-chip baud rate generator or an external clock input from the SCK pin can be selected as the SCI transmit/receive clock. The clock source is selected by the C/$\overline{A}$ bit in the serial mode register (SMR) and bits CKE1 and CKE0 in the serial control register (SCR) (table 12.9).

When an external clock is input at the SCK pin, it must have a frequency equal to 16 times the desired bit rate.

When the SCI operates on an internal clock, it can output a clock signal at the SCK pin. The frequency of this output clock is equal to the bit rate. The phase is aligned as in figure 12.3 so that the rising edge of the clock occurs at the center of each transmit data bit.

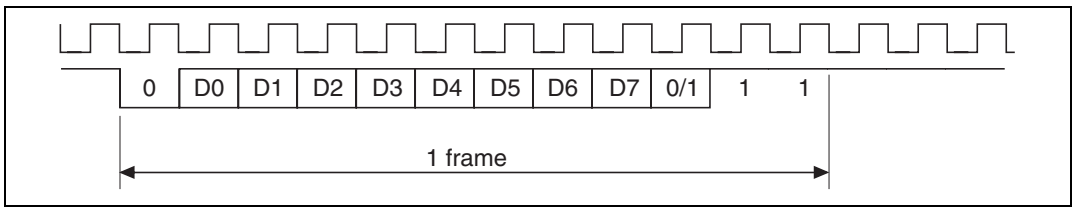

Figure 12.3 Output Clock and Communication Data Phase Relationship (Asynchronous Mode)

Data Transmit/Receive Operations

SCI Initialization (Asynchronous Mode): Before transmitting or receiving, clear the TE and RE bits to 0 in the serial control register (SCR), then initialize the SCI as follows.

When changing the operation mode or communication format, always clear the TE and RE bits to 0 before following the procedure given below. Clearing TE to 0 sets TDRE to 1 and initializes the transmit shift register (TSR). Clearing RE to 0, however, does not initialize the RDRF, PER, FER, and ORER flags and receive data register (RDR), which retain their previous contents.

When an external clock is used, the clock should not be stopped during initialization or subsequent operation. SCI operation becomes unreliable if the clock is stopped.

Figure 12.4 is a sample flowchart for initializing the SCI. The procedure is as follows (the steps correspond to the numbers in the flowchart):

1. Select the clock source in the serial control register (SCR). Leave RIE, TIE, TEIE, MPIE, TE and RE cleared to 0. If clock output is selected in asynchronous mode, clock output starts immediately after the setting is made to SCR.
2. Select the communication format in the serial mode register (SMR).
3. Write the value corresponding to the bit rate in the bit rate register (BRR) unless an external clock is used.
4. Wait for at least the interval required to transmit or receive one bit, then set TE or RE in the serial control register (SCR) to 1. Also set RIE, TIE, TEIE and MPIE as necessary. Setting TE or RE enables the SCI to use the TxD or RxD pin. The initial states are the marking transmit state, and the idle receive state (waiting for a start bit).

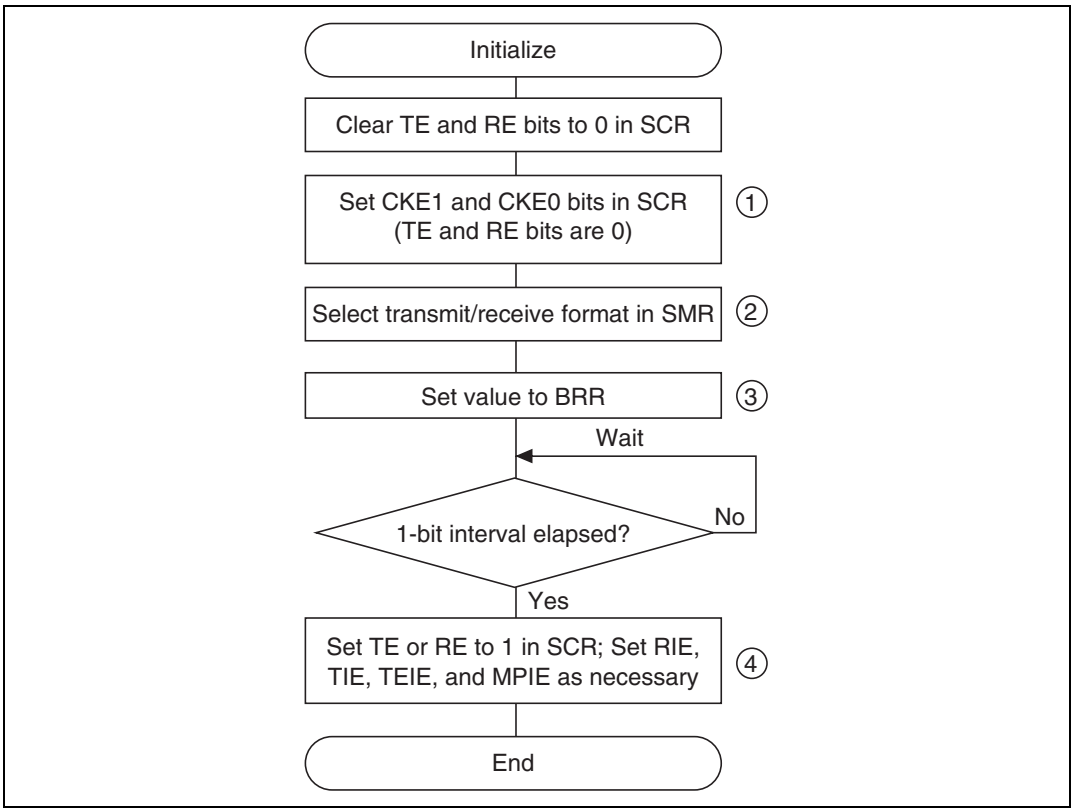

Figure 12.4 Sample Flowchart for SCI Initialization

Transmitting Serial Data (Asynchronous Mode): Figure 12.5 shows a sample flowchart for transmitting serial data. The procedure is as follows (the steps correspond to the numbers in the flowchart):

1. SCI initialization: Set the TxD pin using the PFC.
2. SCI status check and transmit data write: Read the serial status register (SSR), check that the TDRE bit is 1, then write transmit data in the transmit data register (TDR) and clear TDRE to 0.
3. Continue transmitting serial data: Read the TDRE bit to check whether it is safe to write (if it reads 1); if so, write data in TDR, then clear TDRE to 0. When the DMAC or the DTC is started by a transmit-data-empty interrupt request (TXI) in order to write data in TDR, the TDRE bit is checked and cleared automatically.
4. To output a break at the end of serial transmission, first clear the port data register (DR) to 0, then clear the TE to 0 in SCR and use the PFC to establish the TxD pin as an output port.

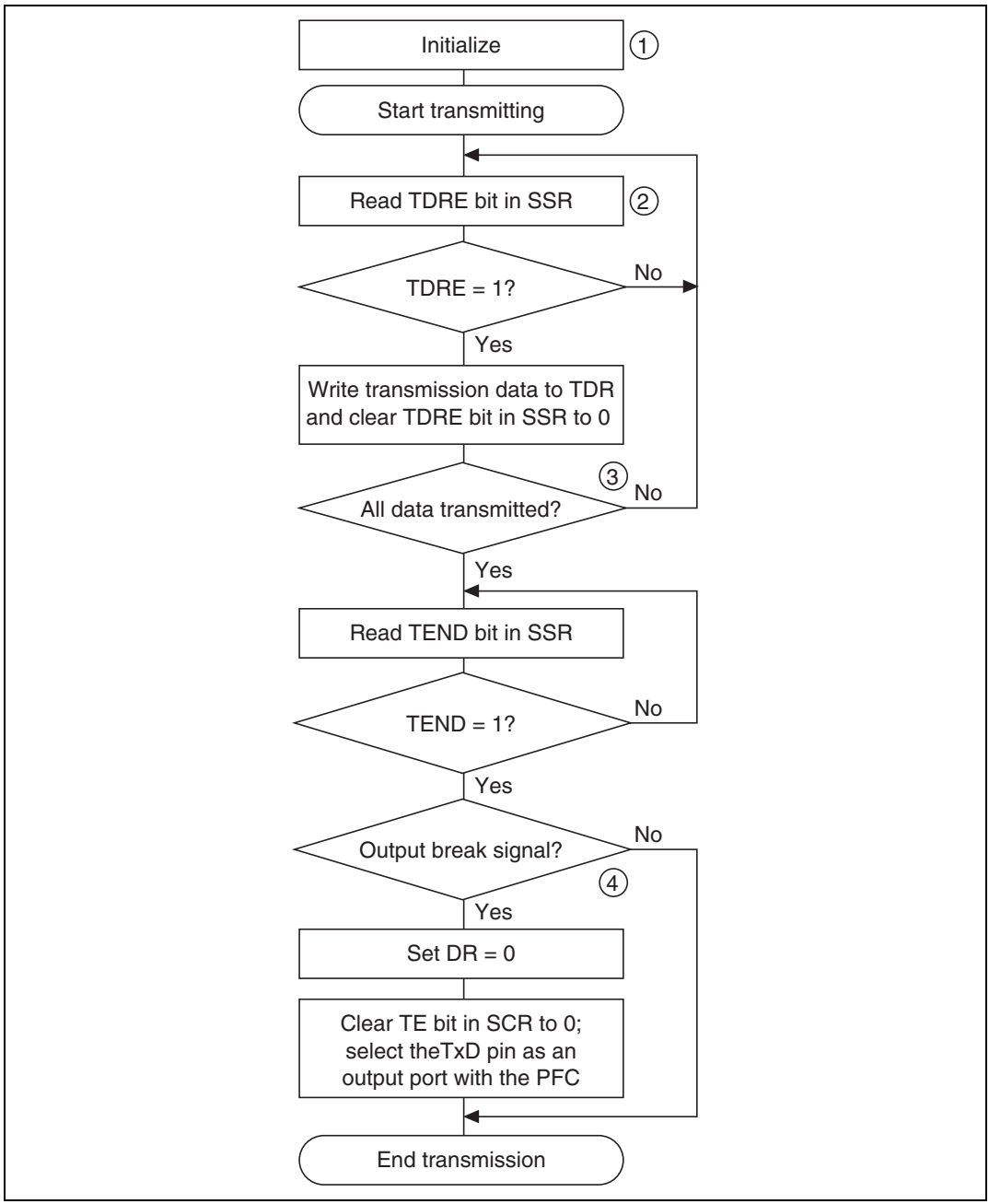

Figure 12.5 Sample Flowchart for Transmitting Serial Data

In transmitting serial data, the SCI operates as follows:

1. The SCI monitors the TDRE bit in the SSR. When TDRE is cleared to 0, the SCI recognizes that the transmit data register (TDR) contains new data, and loads this data from the TDR into the transmit shift register (TSR).
2. After loading the data from the TDR into the TSR, the SCI sets the TDRE bit to 1 and starts transmitting. If the transmit-data-empty interrupt enable bit (TIE) is set to 1 in the SCR, the SCI requests a transmit-data-empty interrupt (TXI) at this time.

   Serial transmit data is transmitted in the following order from the TxD pin:

   a. Start bit: one 0 bit is output.
   b. Transmit data: seven or eight bits of data are output, LSB first.
   c. Parity bit or multiprocessor bit: one parity bit (even or odd parity) or one multiprocessor bit is output. Formats in which neither a parity bit nor a multiprocessor bit is output can also be selected.
   d. Stop bit: one or two 1 bits (stop bits) are output.
   e. Marking: output of 1 bits continues until the start bit of the next transmit data.
3. The SCI checks the TDRE bit when it outputs the stop bit. If TDRE is 0, the SCI loads new data from the TDR into the TSR, outputs the stop bit, then begins serial transmission of the next frame. If TDRE is 1, the SCI sets the TEND bit to 1 in the SSR, outputs the stop bit, then continues output of 1 bits (marking). If the transmit-end interrupt enable bit (TEIE) in the SCR is set to 1, a transmit-end interrupt (TEI) is requested.

Figure 12.6 shows an example of SCI transmit operation in the asynchronous mode.

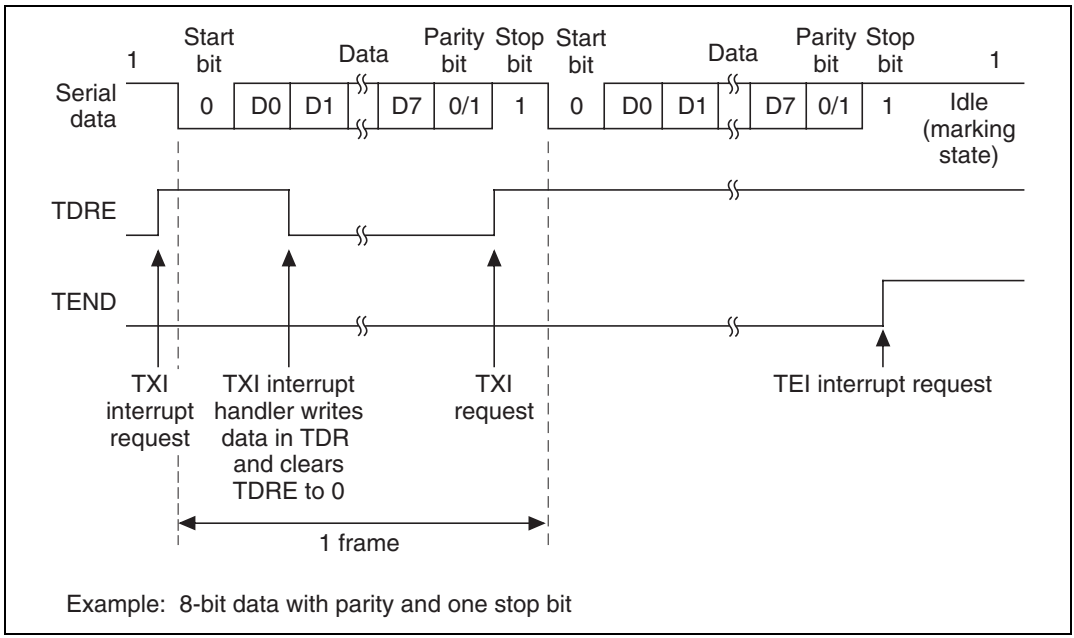

Figure 12.6 SCI Transmit Operation in Asynchronous Mode

Receiving Serial Data (Asynchronous Mode): Figures 12.7 (1) and (2) show a sample flowchart for receiving serial data. The procedure is as follows (the steps correspond to the numbers in the flowchart).

1. SCI initialization: Set the RxD pin using the PFC.
2. Receive error handling and break detection: If a receive error occurs, read the ORER, PER, and FER bits of the SSR to identify the error. After executing the necessary error handling, clear ORER, PER, and FER all to 0. Receiving cannot resume if ORER, PER or FER remain set to 1. When a framing error occurs, the RxD pin can be read to detect the break state.
3. SCI status check and receive-data read: Read the serial status register (SSR), check that RDRF is set to 1, then read receive data from the receive data register (RDR) and clear RDRF to 0. The RxI interrupt can also be used to determine if the RDRF bit has changed from 0 to 1.
4. Continue receiving serial data: Read the RDR and RDRF bit and clear RDRF to 0 before the stop bit of the current frame is received. If the DMAC is started by a receive-data-full interrupt (RxI) to read RDR, the RDRF bit is cleared automatically so this step is unnecessary.

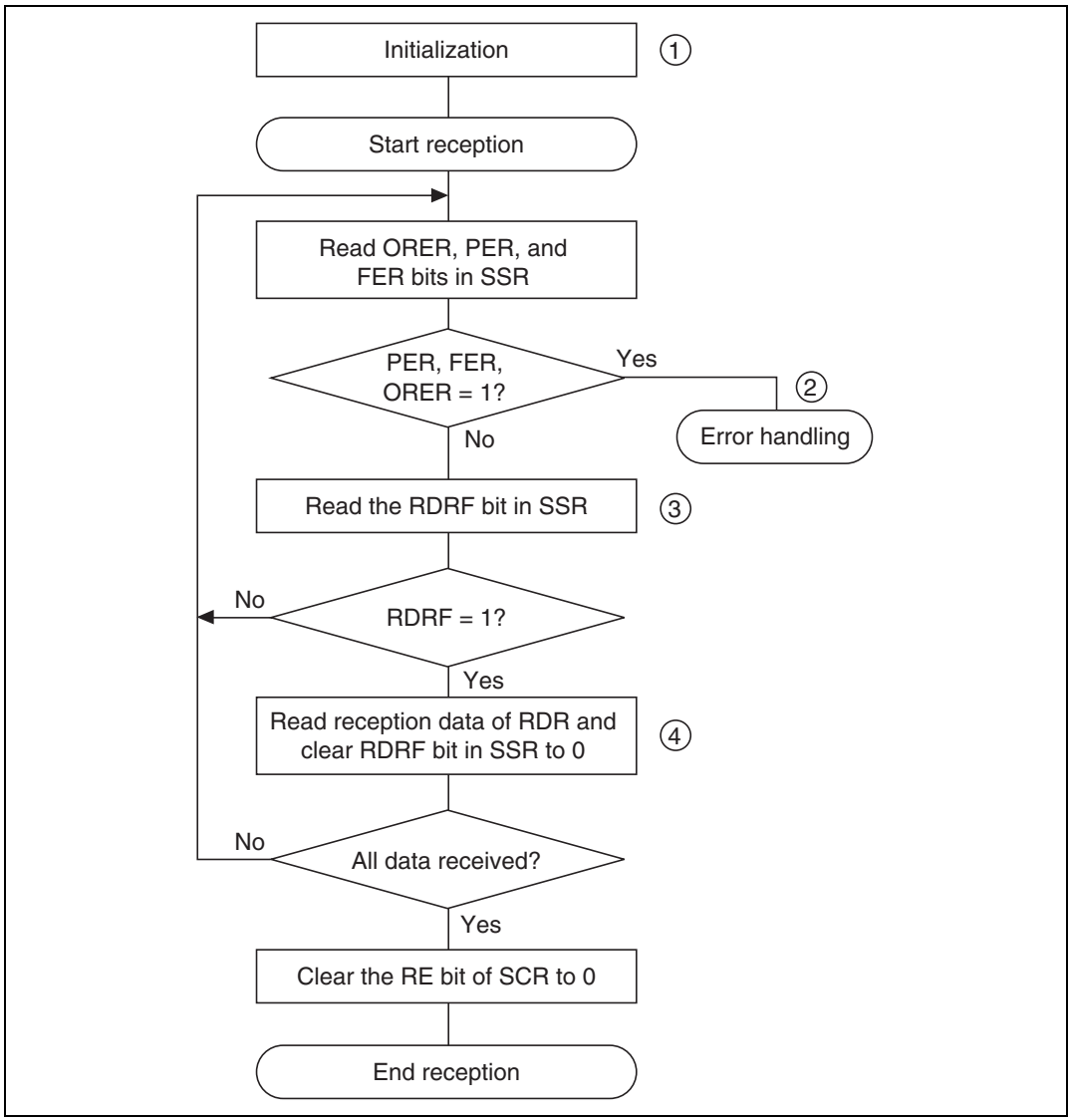

Figure 12.7 Sample Flowchart for Receiving Serial Data (1)

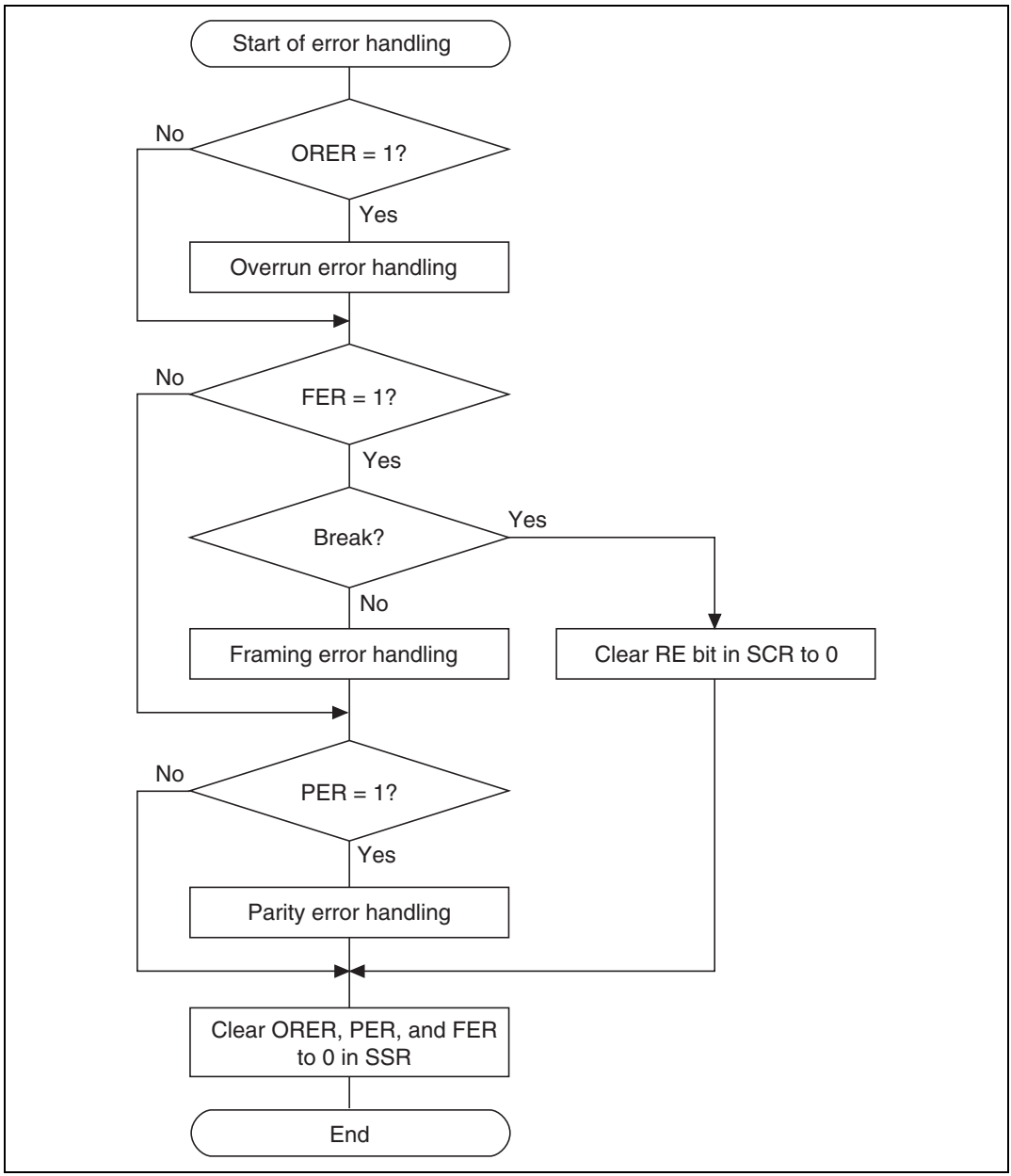

Figure 12.7 Sample Flowchart for Receiving Serial Data (2)

In receiving, the SCI operates as follows:

1. The SCI monitors the communication line. When it detects a start bit (0), the SCI synchronizes internally and starts receiving.
2. Receive data is shifted into the RSR in order from the LSB to the MSB.
3. The parity bit and stop bit are received. After receiving these bits, the SCI makes the following checks:
   a. Parity check. The number of 1s in the receive data must match the even or odd parity setting of the O/E bit in the SMR.
   b. Stop bit check. The stop bit value must be 1. If there are two stop bits, only the first stop bit is checked.
   c. Status check. RDRF must be 0 so that receive data can be loaded from the RSR into the RDR.

   If the data passes these checks, the SCI sets RDRF to 1 and stores the received data in the RDR. If one of the checks fails (receive error), the SCI operates as indicated in table 12.11.

   Note: When a receive error occurs, further receiving is disabled. While receiving, the RDRF bit is not set to 1, so be sure to clear the error flags.
4. After setting RDRF to 1, if the receive-data-full interrupt enable bit (RIE) is set to 1 in the SCR, the SCI requests a receive-data-full interrupt (RxI). If one of the error flags (ORER, PER, or FER) is set to 1 and the receive-data-full interrupt enable bit (RIE) in the SCR is also set to 1, the SCI requests a receive-error interrupt (ERI).

Figure 12.8 shows an example of SCI receive operation in the asynchronous mode.

Table 12.11 Receive Error Conditions and SCI Operation

Receive Error	Abbreviation	Condition	Data Transfer
Overrun error	ORER	Receiving of next data ends while RDRF is still set to 1 in SSR	Receive data not loaded from RSR into RDR
Framing error	FER	Stop bit is 0	Receive data loaded from RSR into RDR
Parity error	PER	Parity of receive data differs from even/odd parity setting in SMR	Receive data loaded from RSR into RDR

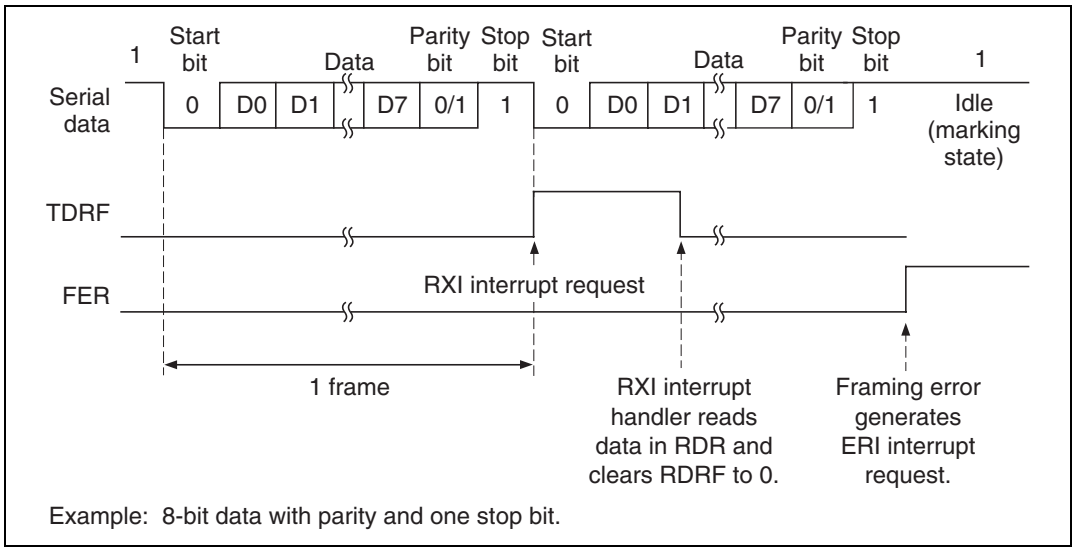

Figure 12.8 SCI Receive Operation

12.3.3 Multiprocessor Communication

The multiprocessor communication function enables several processors to share a single serial communication line for sending and receiving data. The processors communicate in the asynchronous mode using a format with an additional multiprocessor bit (multiprocessor format).

In multiprocessor communication, each receiving processor is addressed by a unique ID. A serial communication cycle consists of an ID-sending cycle that identifies the receiving processor, and a data-sending cycle. The multiprocessor bit distinguishes ID-sending cycles from data-sending cycles. The transmitting processor starts by sending the ID of the receiving processor with which it wants to communicate as data with the multiprocessor bit set to 1. Next the transmitting processor sends transmit data with the multiprocessor bit cleared to 0.

Receiving processors skip incoming data until they receive data with the multiprocessor bit set to 1. When they receive data with the multiprocessor bit set to 1, receiving processors compare the data with their IDs. The receiving processor with a matching ID continues to receive further incoming data. Processors with IDs not matching the received data skip further incoming data until they again receive data with the multiprocessor bit set to 1. Multiple processors can send and receive data in this way.

Figure 12.9 shows the example of communication among processors using the multiprocessor format.

Communication Formats: Four formats are available. Parity-bit settings are ignored when the multiprocessor format is selected. For details see table 12.8.

Clock: See the description in the asynchronous mode section.

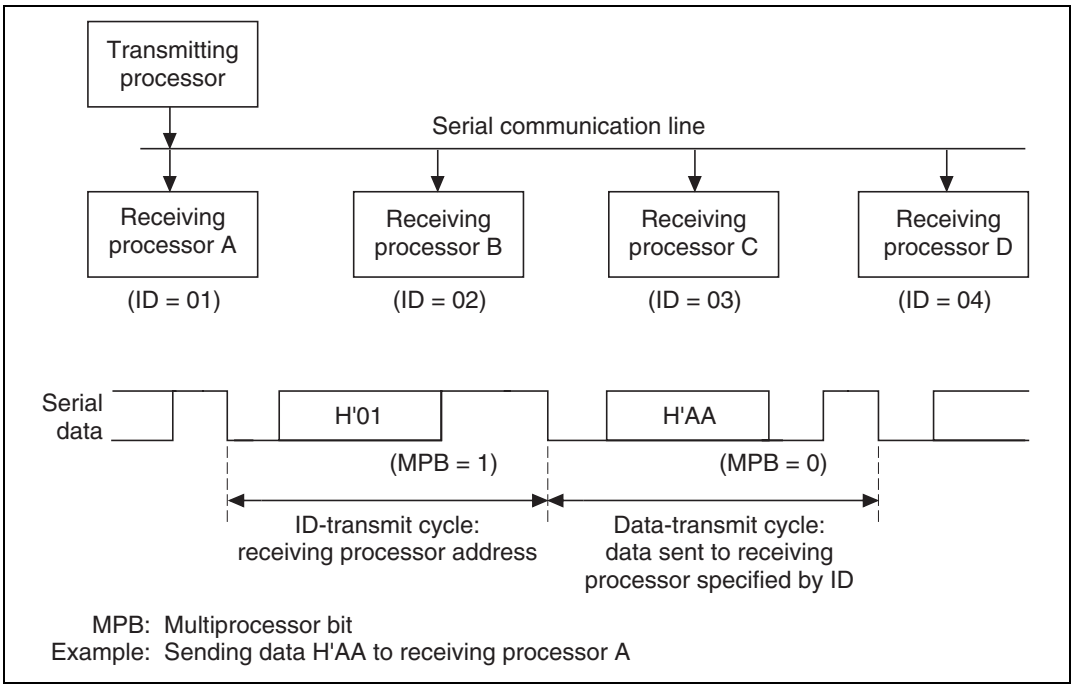

Figure 12.9 Communication Among Processors Using Multiprocessor Format

Transmitting Multiprocessor Serial Data: Figure 12.10 shows a sample flowchart for transmitting multiprocessor serial data. The procedure is as follows (the steps correspond to the numbers in the flowchart):

1. SCI initialization: Set the TxD pin using the PFC.
2. SCI status check and transmit data write: Read the serial status register (SSR), check that the TDRE bit is 1, then write transmit data in the transmit data register (TDR). Also set MPBT (multiprocessor bit transfer) to 0 or 1 in SSR. Finally, clear TDRE to 0.
3. Continue transmitting serial data: Read the TDRE bit to check whether it is safe to write (if it reads 1); if so, write data in TDR, then clear TDRE to 0. When the DMAC is started by a transmit-data-empty interrupt request (TXI) to write data in TDR, the TDRE bit is checked and cleared automatically.
4. Output a break at the end of serial transmission: Set the data register (DR) of the port to 0, then clear TE to 0 in SCR and set the TxD pin function as output port with the PFC.

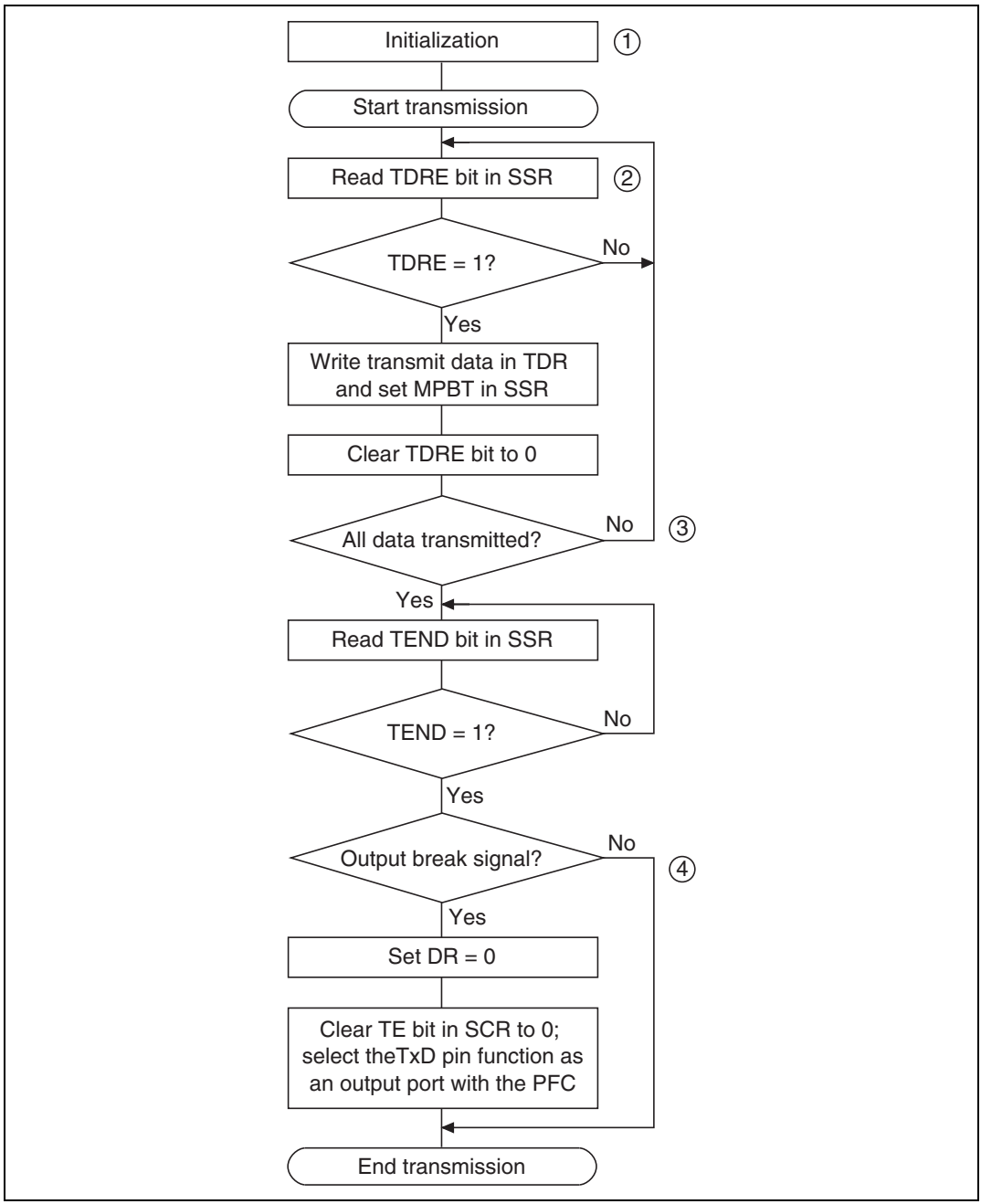

Figure 12.10 Sample Flowchart for Transmitting Multiprocessor Serial Data

In transmitting serial data, the SCI operates as follows:

1. The SCI monitors the TDRE bit in the SSR. When TDRE is cleared to 0 the SCI recognizes that the transmit data register (TDR) contains new data, and loads this data from the TDR into the transmit shift register (TSR).
2. After loading the data from the TDR into the TSR, the SCI sets the TDRE bit to 1 and starts transmitting. If the transmit-data-empty interrupt enable bit (TIE) in the SCR is set to 1, the SCI requests a transmit-data-empty interrupt (TXI) at this time.

   Serial transmit data is transmitted in the following order from the TxD pin:

   a. Start bit: one 0 bit is output.
   b. Transmit data: seven or eight bits are output, LSB first.
   c. Multiprocessor bit: one multiprocessor bit (MPBT value) is output.
   d. Stop bit: one or two 1 bits (stop bits) are output.
   e. Marking: output of 1 bits continues until the start bit of the next transmit data.
3. The SCI checks the TDRE bit when it outputs the stop bit. If TDRE is 0, the SCI loads data from the TDR into the TSR, outputs the stop bit, then begins serial transmission of the next frame. If TDRE is 1, the SCI sets the TEND bit in the SSR to 1, outputs the stop bit, then continues output of 1 bits in the marking state. If the transmit-end interrupt enable bit (TEIE) in the SCR is set to 1, a transmit-end interrupt (TEI) is requested at this time.

Figure 12.11 shows an example of SCI receive operation in the multiprocessor format.

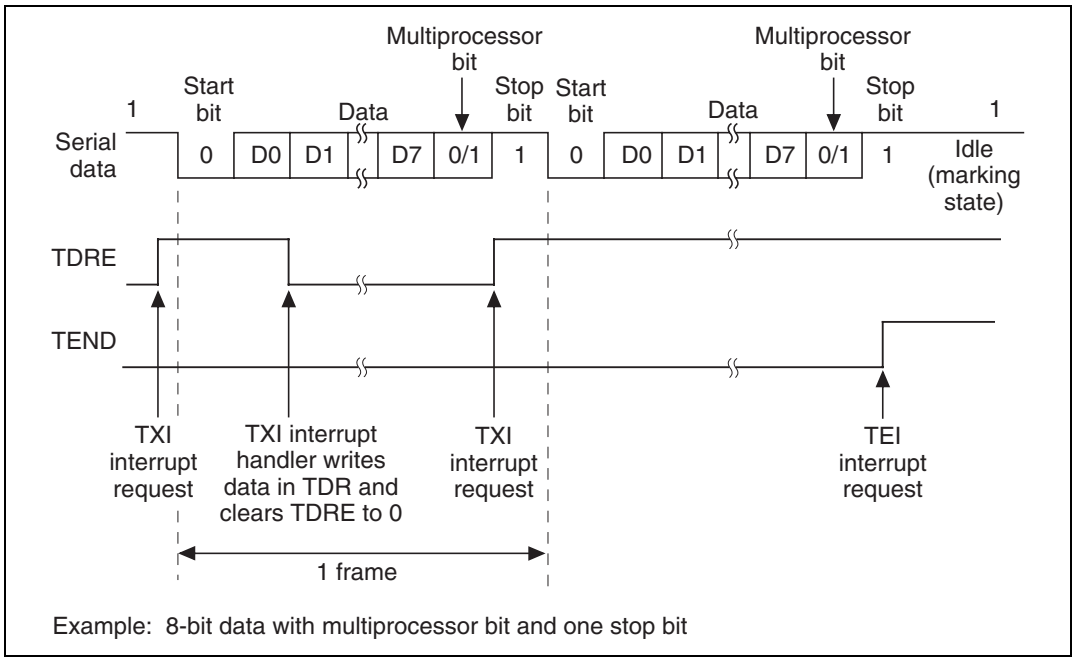

Figure 12.11 SCI Multiprocessor Transmit Operation

Receiving Multiprocessor Serial Data: Figures 12.12 (1) and (2) show a sample flowchart for receiving multiprocessor serial data. The procedure for receiving multiprocessor serial data is listed below.

1. SCI initialization: Set the RxD pin using the PFC.
2. ID receive cycle: Set the MPIE bit in the serial control register (SCR) to 1.
3. SCI status check and compare to ID reception: Read the serial status register (SSR), check that RDRF is set to 1, then read data from the receive data register (RDR) and compare with the processor's own ID. If the ID does not match the receive data, set MPIE to 1 again and clear RDRF to 0. If the ID matches the receive data, clear RDRF to 0.
4. Receive error handling and break detection: If a receive error occurs, read the ORER and FER bits in SSR to identify the error. After executing the necessary error processing, clear both ORER and FER to 0. Receiving cannot resume if ORER or FER remain set to 1. When a framing error occurs, the RxD pin can be read to detect the break state.
5. SCI status check and data receiving: Read SSR, check that RDRF is set to 1, then read data from the receive data register (RDR).

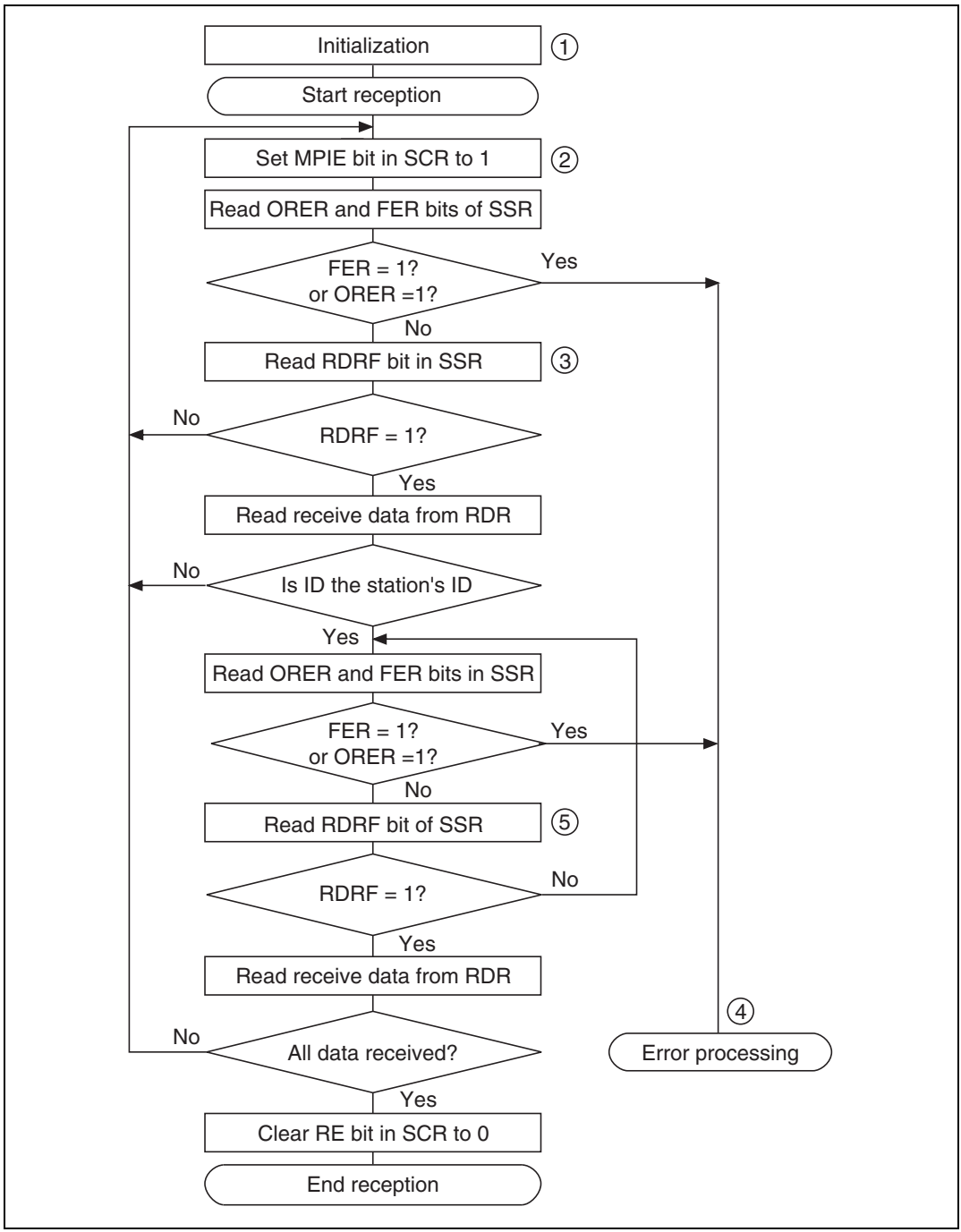

Figure 12.12 Sample Flowchart for Receiving Multiprocessor Serial Data (1)

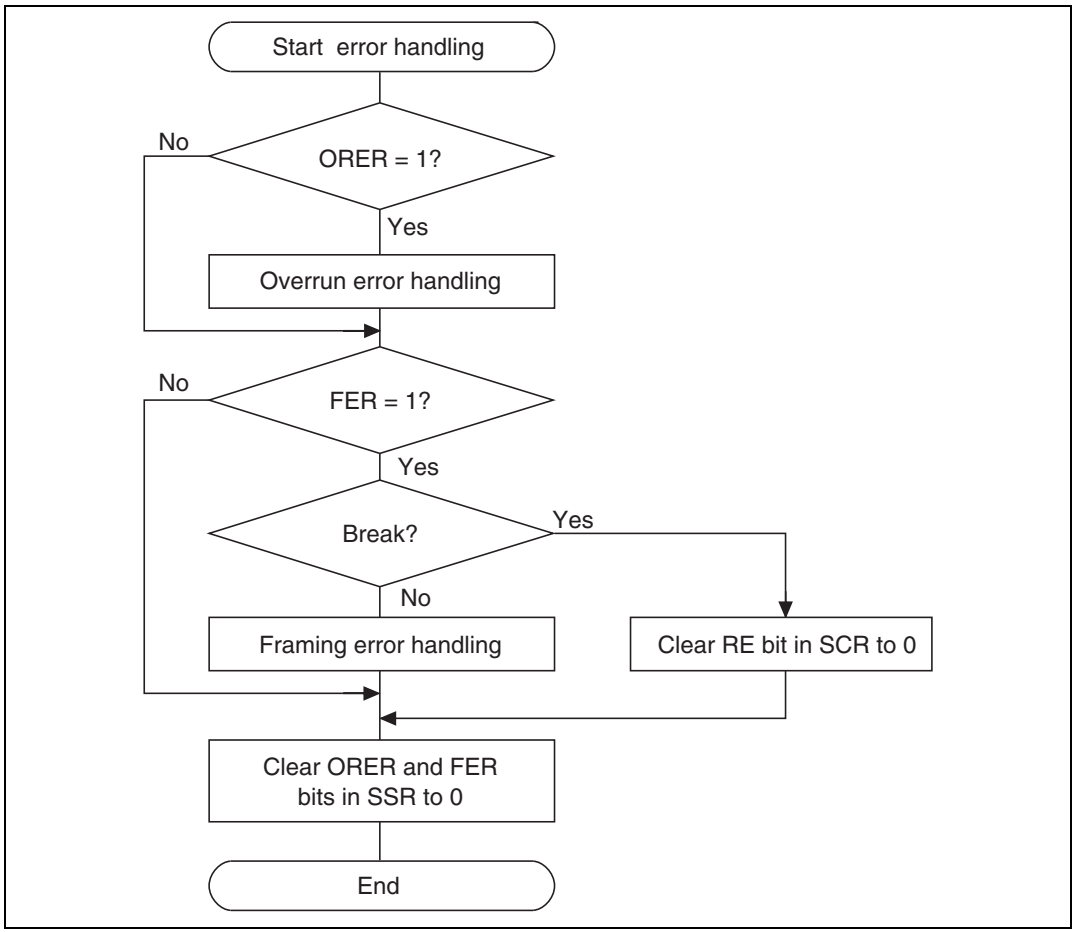

Figure 12.12 Sample Flowchart for Receiving Multiprocessor Serial Data (2)

Figures 12.13 (1) and (2) show examples of SCI receive operation using a multiprocessor format.

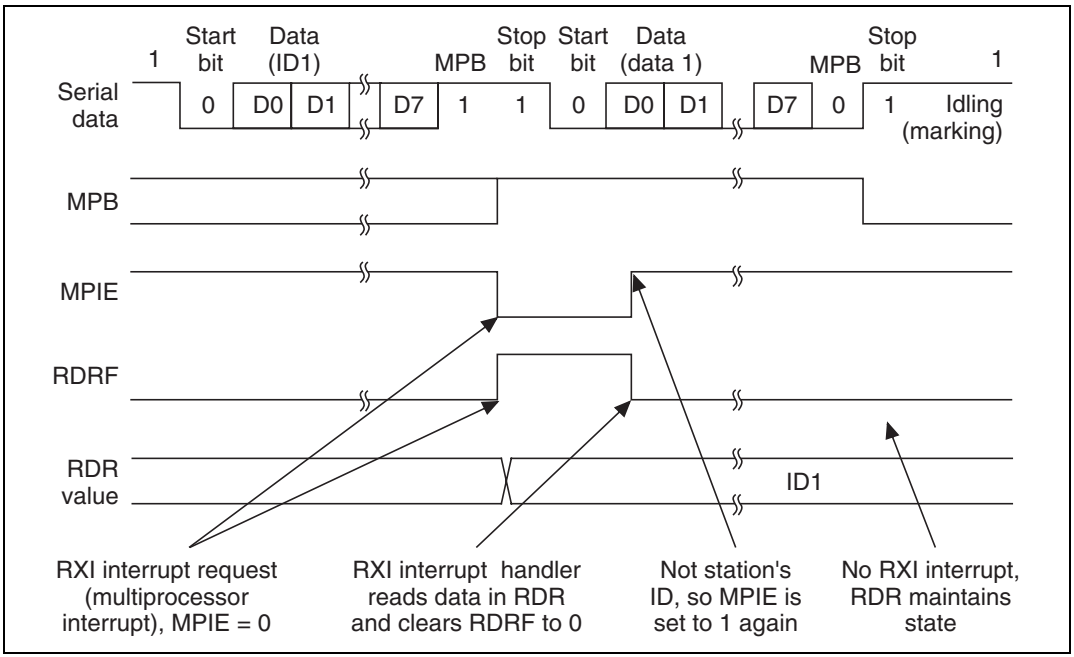

Figure 12.13 SCI Receive Operation (ID Does Not Match) (1)

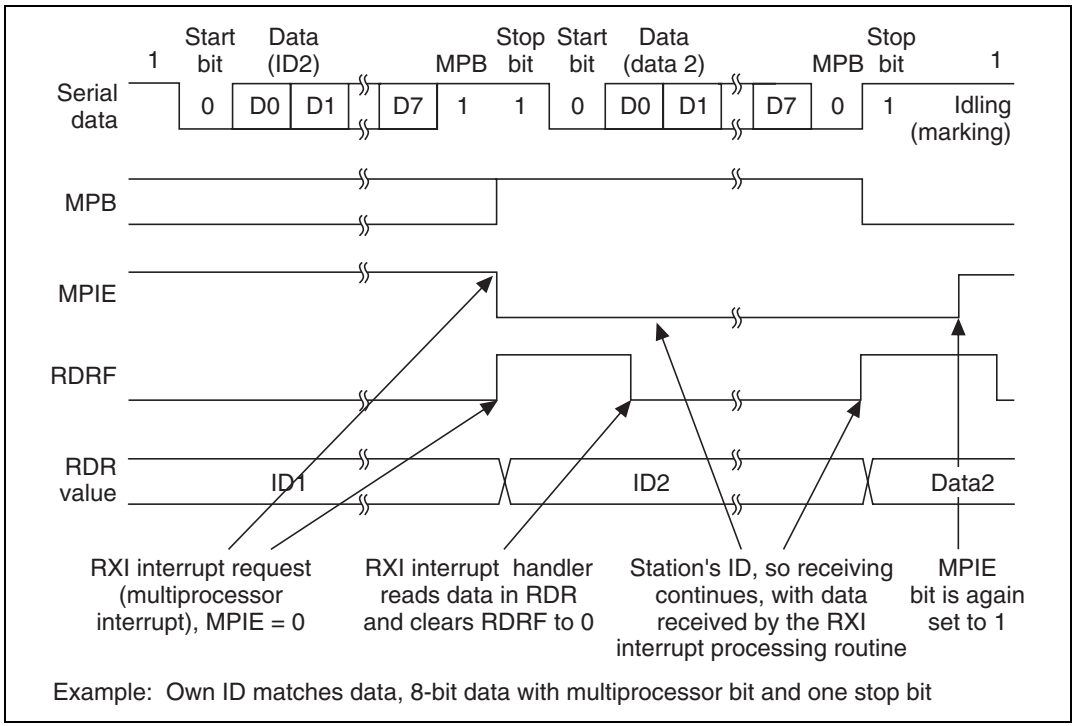

Figure 12.13 Example of SCI Receive Operation (ID Matches) (2)

12.3.4 Clock Synchronous Operation

In the clock synchronous mode, the SCI transmits and receives data in synchronization with clock pulses. This mode is suitable for high-speed serial communication.

The SCI transmitter and receiver are independent, so full duplex communication is possible while sharing the same clock. The transmitter and receiver are also double buffered, so continuous transmitting or receiving is possible by reading or writing data while transmitting or receiving is in progress.

Figure 12.14 shows the general format in clock synchronous serial communication.

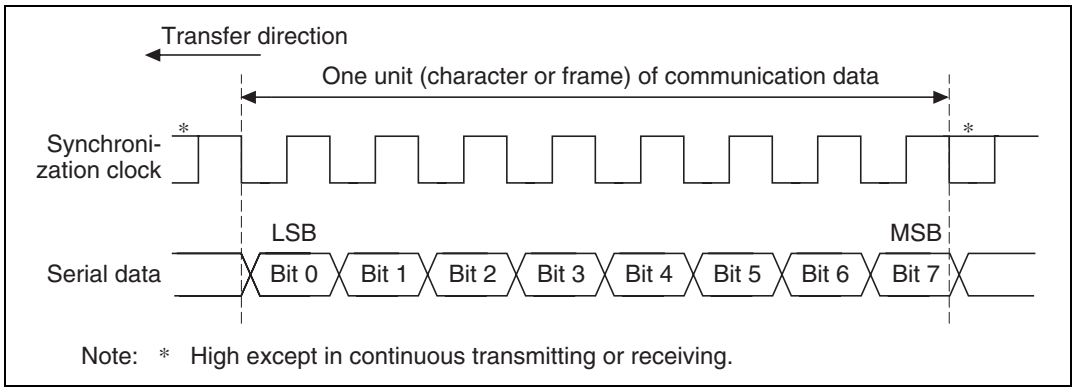

Figure 12.14 Data Format in Clock Synchronous Communication

In clock synchronous serial communication, each data bit is output on the communication line from one falling edge of the serial clock to the next. Data are guaranteed valid at the rising edge of the serial clock. In each character, the serial data bits are transmitted in order from the LSB (first) to the MSB (last). After output of the MSB, the communication line remains in the state of the MSB. In the clock synchronous mode, the SCI transmits or receives data by synchronizing with the falling edge of the synchronization clock.

Communication Format: The data length is fixed at eight bits. No parity bit or multiprocessor bit can be added.

Clock: An internal clock generated by the on-chip baud rate generator or an external clock input from the SCK pin can be selected as the SCI transmit/receive clock. The clock source is selected by the C/$\overline{A}$ bit in the serial mode register (SMR) and bits CKE1 and CKE0 in the serial control register (SCR). See table 12.9.

When the SCI operates on an internal clock, it outputs the clock signal at the SCK pin. Eight clock pulses are output per transmitted or received character. When the SCI is not transmitting or receiving, the clock signal remains in the high state.

Note: An overrun error occurs only during the receive operation, and the sync clock is output until the RE bit is cleared to 0. When you want to perform a receive operation in one-character units, select external clock for the clock source.

Transmit/Receive Operations

SCI Initialization (Clock Synchronous Mode): Before transmitting or receiving, software must clear the TE and RE bits to 0 in the serial control register (SCR), then initialize the SCI as follows.

When changing the mode or communication format, always clear the TE and RE bits to 0 before following the procedure given below. Clearing TE to 0 sets TDRE to 1 and initializes the transmit shift register (TSR). Clearing RE to 0, however, does not initialize the RDRF, PER, FER, and ORER flags and receive data register (RDR), which retain their previous contents.

Figure 12.15 is a sample flowchart for initializing the SCI.

1. Select the clock source in the serial control register (SCR). Leave RIE, TIE, TEIE, MPIE, TE, and RE cleared to 0.
2. Select the communication format in the serial mode register (SMR).
3. Write the value corresponding to the bit rate in the bit rate register (BRR) unless an external clock is used.
4. Wait for at least the interval required to transmit or receive one bit, then set TE or RE in the serial control register (SCR) to 1. Also set RIE, TIE, TEIE, and MPIE. The TxD, RxD pins becomes usable in response to the PFC corresponding bits and the TE, RE bit settings.

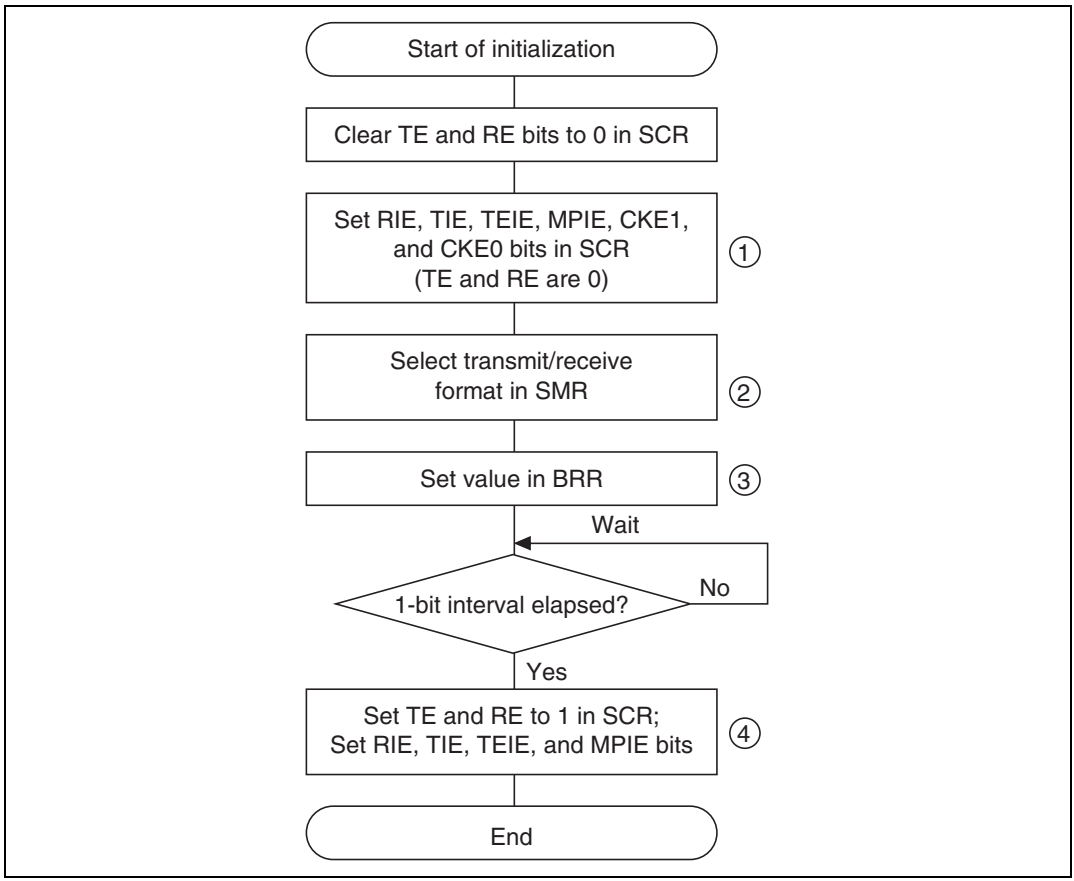

Figure 12.15 Sample Flowchart for SCI Initialization

Transmitting Serial Data (Synchronous Mode): Figure 12.16 shows a sample flowchart for transmitting serial data and indicates the procedure to follow.

1. SCI initialization: Set the TxD pin function with the PFC.
2. SCI status check and transmit data write: Read SSR, check that the TDRE flag is 1, then write transmit data in TDR and clear the TDRE flag to 0.
3. To continue transmitting serial data: After checking that the TDRE flag is 1, indicating that data can be written, write data in TDR, then clear the TDRE flag to 0. When the DMAC or DTC is activated by a transmit-data-empty interrupt request (TXI) to write data in TDR, the TDRE flag is checked and cleared automatically.

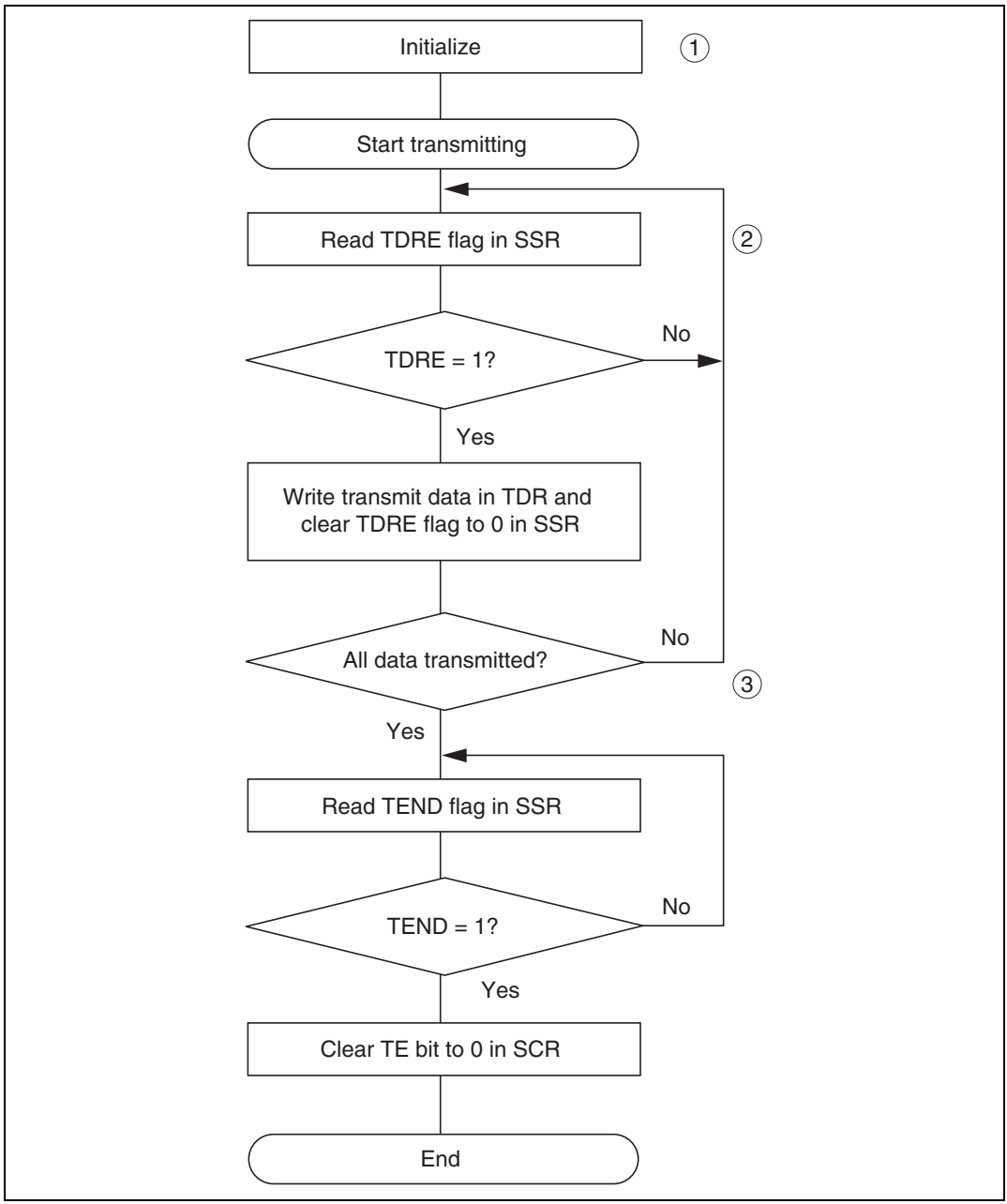

Figure 12.16 Sample Flowchart for Serial Transmitting

Figure 12.17 shows an example of SCI transmit operation.

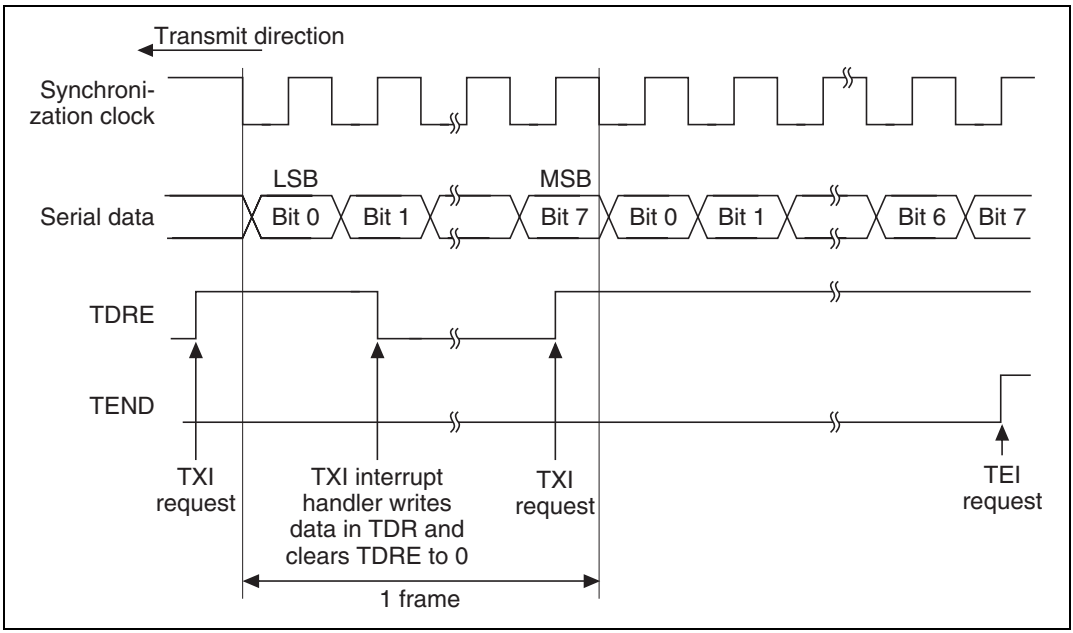

Figure 12.17 Example of SCI Transmit Operation

SCI serial transmission operates as follows.

1. The SCI monitors the TDRE bit in the SSR. When TDRE is cleared to 0 the SCI recognizes that the transmit data register (TDR) contains new data and loads this data from the TDR into the transmit shift register (TSR).
2. After loading the data from the TDR into the TSR, the SCI sets the TDRE bit to 1 and starts transmitting. If the transmit-data-empty interrupt enable bit (TIE) in the SCR is set to 1, the SCI requests a transmit-data-empty interrupt (TXI) at this time.

   If clock output mode is selected, the SCI outputs eight synchronous clock pulses. If an external clock source is selected, the SCI outputs data in synchronization with the input clock. Data are output from the TxD pin in order from the LSB (bit 0) to the MSB (bit 7).
3. The SCI checks the TDRE bit when it outputs the MSB (bit 7). If TDRE is 0, the SCI loads data from the TDR into the TSR, then begins serial transmission of the next frame. If TDRE is 1, the SCI sets the TEND bit in the SSR to 1, transmits the MSB, then holds the transmit data pin (TxD) in the MSB state. If the transmit-end interrupt enable bit (TEIE) in the SCR is set to 1, a transmit-end interrupt (TEI) is requested at this time.
4. After the end of serial transmission, the SCK pin is held in the high state.

Receiving Serial Data (Clock Synchronous Mode): Figures 12.18 (1) and (2) show a sample flowchart for receiving serial data. When switching from the asynchronous mode to the clock synchronous mode, make sure that ORER, PER, and FER are cleared to 0. If PER or FER is set to 1, the RDRF bit will not be set and both transmitting and receiving will be disabled.

The procedure for receiving serial data is listed below:

1. SCI initialization: Set the RxD pin using the PFC.
2. Receive error handling: If a receive error occurs, read the ORER bit in SSR to identify the error. After executing the necessary error handling, clear ORER to 0. Transmitting/receiving cannot resume if ORER remains set to 1.
3. SCI status check and receive data read: Read the serial status register (SSR), check that RDRF is set to 1, then read receive data from the receive data register (RDR) and clear RDRF to 0. The RxI interrupt can also be used to determine if the RDRF bit has changed from 0 to 1.
4. Continue receiving serial data: Read RDR, and clear RDRF to 0 before the frame MSB (bit 7) of the current frame is received. If the DMAC is started by a receive-data-full interrupt (RXI) to read RDR, the RDRF bit is cleared automatically so this step is unnecessary.

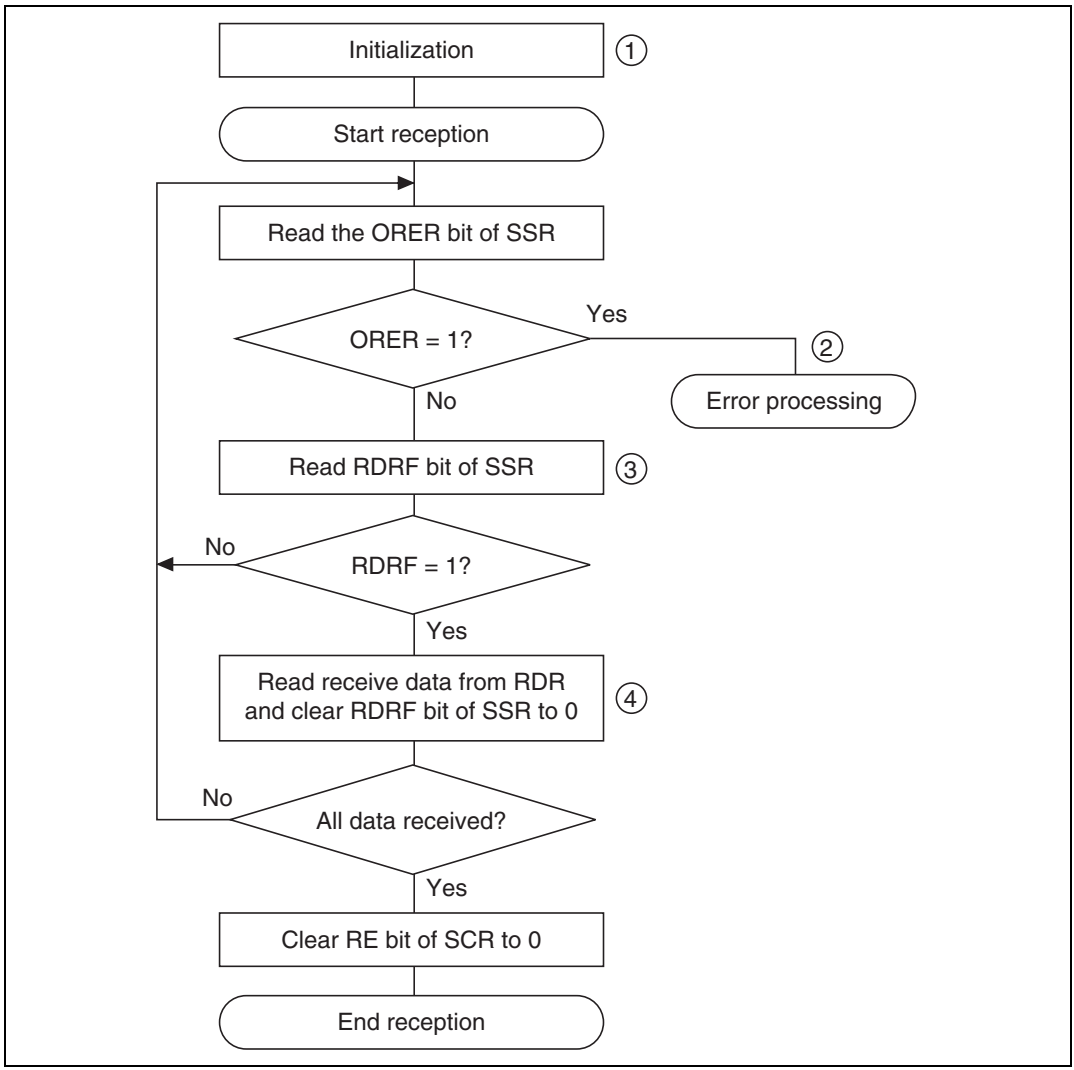

Figure 12.18 Sample Flowchart for Serial Receiving (1)

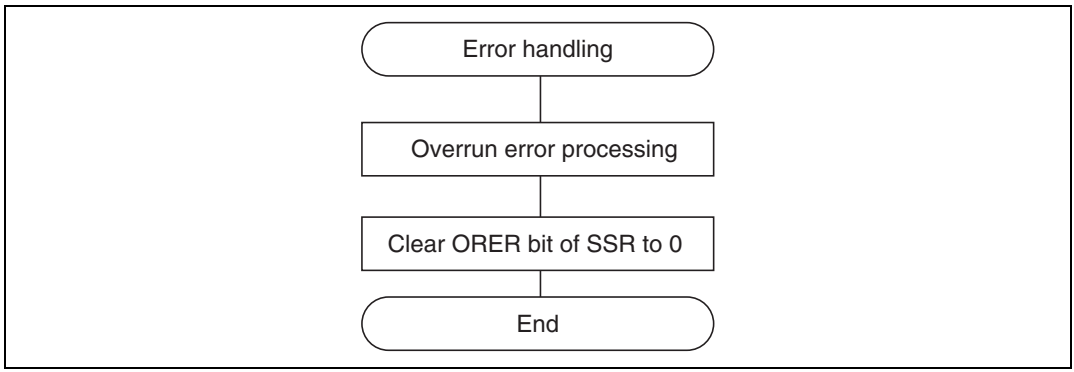

Figure 12.18 Sample Flowchart for Serial Receiving (2)

Figure 12.19 shows an example of the SCI receive operation.

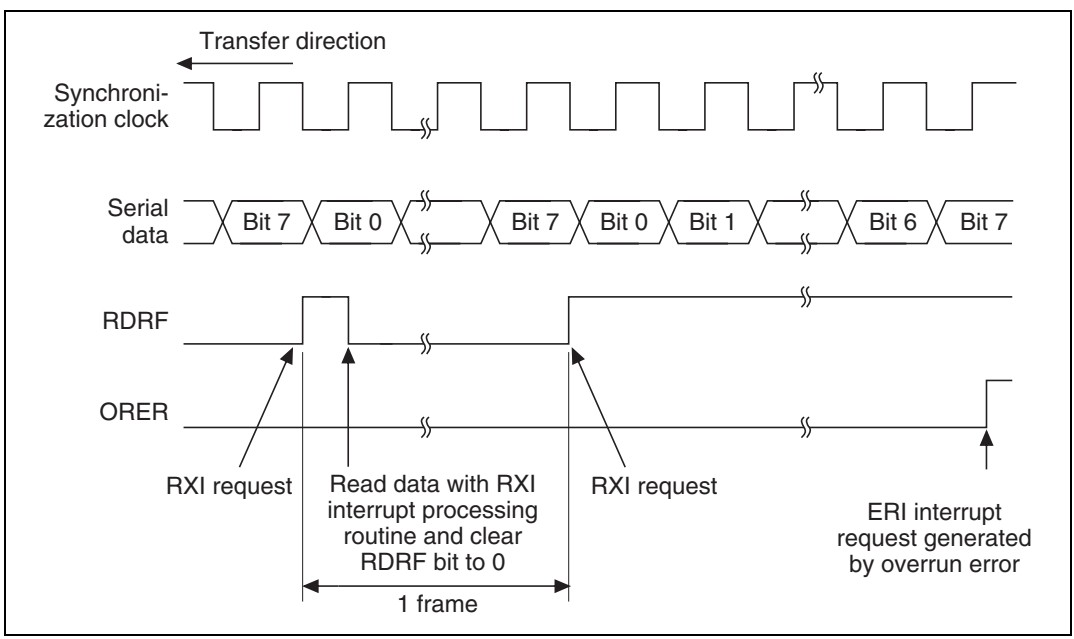

Figure 12.19 Example of SCI Receive Operation

In receiving, the SCI operates as follows:

1. The SCI synchronizes with serial clock input or output and initializes internally.
2. Receive data is shifted into the RSR in order from the LSB to the MSB. After receiving the data, the SCI checks that RDRF is 0 so that receive data can be loaded from the RSR into the RDR. If this check passes, the SCI sets RDRF to 1 and stores the received data in the RDR. If the check does not pass (receive error), the SCI operates as indicated in table 12.11 and no further transmission or reception is possible. If the error flag is set to 1, the RDRF bit is not set to 1 during reception, even if the RDRF bit is 0 cleared. When restarting reception, be sure to clear the error flag.
3. After setting RDRF to 1, if the receive-data-full interrupt enable bit (RIE) is set to 1 in the SCR, the SCI requests a receive-data-full interrupt (RXI). If the ORER bit is set to 1 and the receive-data-full interrupt enable bit (RIE) in the SCR is also set to 1, the SCI requests a receive-error interrupt (ERI).

Transmitting and Receiving Serial Data Simultaneously (Clock Synchronous Mode): Figure 12.20 shows a sample flowchart for transmitting and receiving serial data simultaneously. The procedure is as follows (the steps correspond to the numbers in the flowchart):

1. SCI initialization: Set the TxD and RxD pins using the PFC.
2. SCI status check and transmit data write: Read the serial status register (SSR), check that the TDRE bit is 1, then write transmit data in the transmit data register (TDR) and clear TDRE to 0. The TXI interrupt can also be used to determine if the TDRE bit has changed from 0 to 1.
3. Receive error handling: If a receive error occurs, read the ORER bit in SSR to identify the error. After executing the necessary error processing, clear ORER to 0. Transmitting/receiving cannot resume if ORER remains set to 1.
4. SCI status check and receive data read: Read the serial status register (SSR), check that RDRF is set to 1, then read receive data from the receive data register (RDR) and clear RDRF to 0. The RxI interrupt can also be used to determine if the RDRF bit has changed from 0 to 1.
5. Continue transmitting and receiving serial data: Read the RDRF bit and RDR, and clear RDRF to 0 before the frame MSB (bit 7) of the current frame is received. Also read the TDRE bit to check whether it is safe to write (if it reads 1); if so, write data in TDR, then clear TDRE to 0 before the MSB (bit 7) of the current frame is transmitted. When the DMAC is started by a transmit-data-empty interrupt request (TXI) to write data in TDR, the TDRE bit is checked and cleared automatically. When the DMAC is started by a receive-data-full interrupt (RXI) to read RDR, the RDRF bit is cleared automatically.

Note: In switching from transmitting or receiving to simultaneous transmitting and receiving, simultaneously clear the TE bit and RE bit to 0, then simultaneously set the TE bit and RE bit to 1.

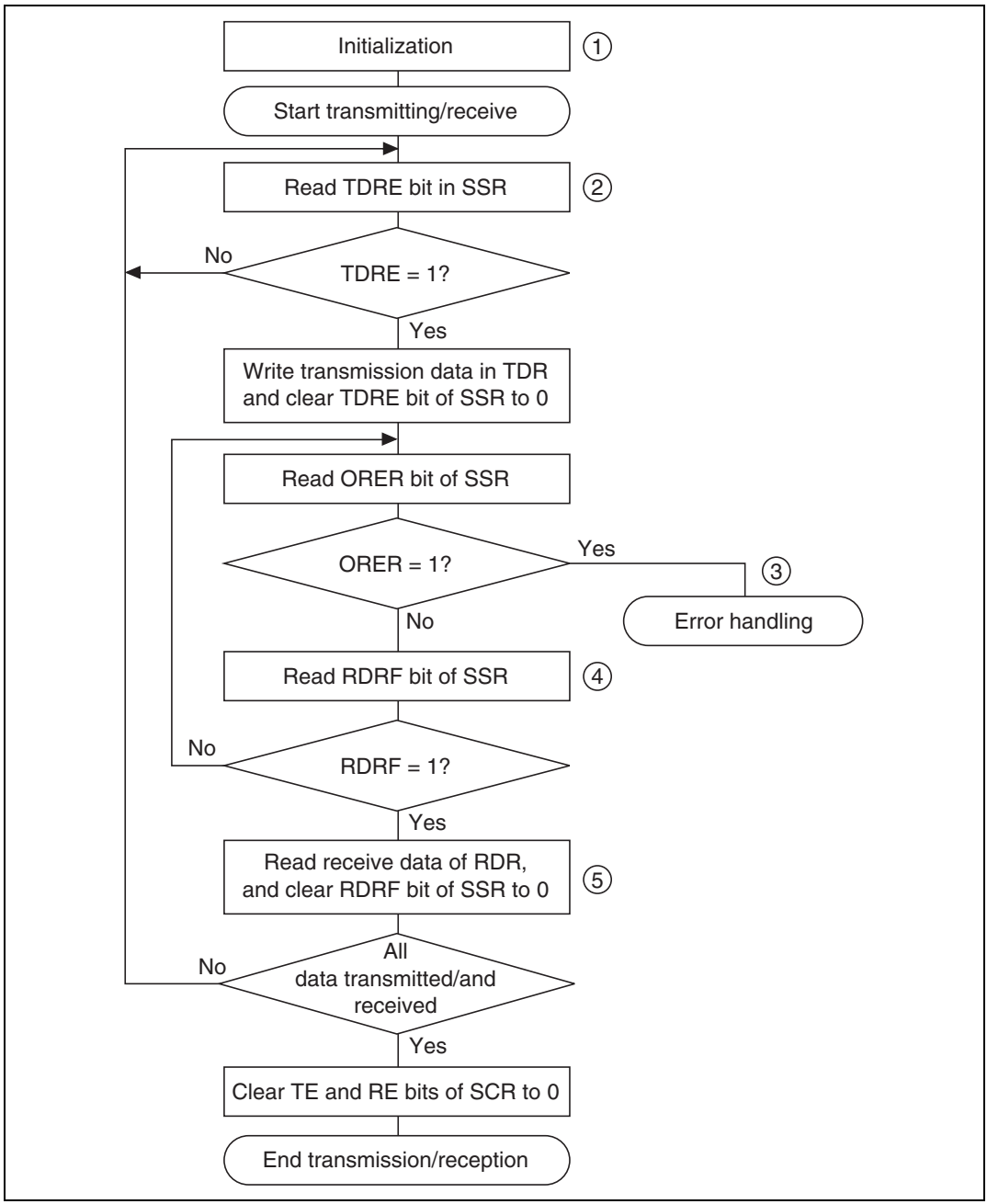

Figure 12.20 Sample Flowchart for Serial Transmission

12.4 SCI Interrupt Sources and the DMAC

The SCI has four interrupt sources: transmit-end (TEI), receive-error (ERI), receive-data-full (RXI), and transmit-data-empty (TXI). Table 12.12 lists the interrupt sources and indicates their priority. These interrupts can be enabled and disabled by the TIE, RIE, and TEIE bits in the serial control register (SCR). Each interrupt request is sent separately to the interrupt controller.

TXI is requested when the TDRE bit in the SSR is set to 1. TXI can start the direct memory access controller (DMAC) to transfer data. TDRE is automatically cleared to 0 when the DMAC writes data in the transmit data register (TDR).

RxI is requested when the RDRF bit in the SSR is set to 1. RXI can start the DMAC to transfer data. RDRF is automatically cleared to 0 when the DMAC reads the receive data register (RDR).

ERI is requested when the ORER, PER, or FER bit in the SSR is set to 1. ERI cannot start the DMAC.

TEI is requested when the TEND bit in the SSR is set to 1. TEI cannot start the DMAC. Where the TXI interrupt indicates that transmit data writing is enabled, the TEI interrupt indicates that the transmit operation is complete.

Table 12.12 SCI Interrupt Sources

Interrupt Source	Description	DMAC Activation	Priority
ERI	Receive error (ORER, PER, or FER)	No	High
RXI	Receive data full (RDRF)	Yes	↑
TXI	Transmit data empty (TDRE)	Yes	↕
TEI	Transmit end (TEND)	No	Low

12.5 Usage Notes

Sections 12.5.1 through 12.5.9 provide information for using the SCI.

12.5.1 TDR Write and TDRE Flags

The TDRE bit in the serial status register (SSR) is a status flag indicating loading of transmit data from TDR into TSR. The SCI sets TDRE to 1 when it transfers data from TDR to TSR. Data can be written to TDR regardless of the TDRE bit status. If new data is written in TDR when TDRE is 0, however, the old data stored in TDR will be lost because the data has not yet been transferred to the TSR. Before writing transmit data to the TDR, be sure to check that TDRE is set to 1.

12.5.2 Simultaneous Multiple Receive Errors

Table 12.13 indicates the state of the SSR status flags when multiple receive errors occur simultaneously. When an overrun error occurs, the RSR contents cannot be transferred to the RDR, so receive data is lost.

Table 12.13 SSR Status Flags and Transfer of Receive Data

	SSR Status Flags				Receive Data Transfer
Receive Error Status	**RDRF**	**ORER**	**FER**	**PER**	**RSR → RDR**
Overrun error	1	1	0	0	X
Framing error	0	0	1	0	O
Parity error	0	0	0	1	O
Overrun error + framing error	1	1	1	0	X
Overrun error + parity error	1	1	0	1	X
Framing error + parity error	0	0	1	1	O
Overrun error + framing error + parity error	1	1	1	1	X

Note: O = Receive data is transferred from RSR to RDR.
X = Receive data is not transferred from RSR to RDR.

12.5.3 Break Detection and Processing

Break signals can be detected by reading the RxD pin directly when a framing error (FER) is detected. In the break state, the input from the RxD pin consists of all 0s, so FER is set and the parity error flag (PER) may also be set. In the break state, the SCI receiver continues to operate, so if the FER bit is cleared to 0, it will be set to 1 again.

12.5.4 Sending a Break Signal

The TxD pin becomes a general I/O pin with the I/O direction and level determined by the I/O port data register (DR) and pin function controller (PFC) control register (CR). These conditions allow break signals to be sent. The DR value is substituted for the marking status until the PFC is set. Consequently, the output port is set to initially output a 1. To send a break in serial transmission, first clear the DR to 0, then establish the TxD pin as an output port using the PFC. When TE is cleared to 0, the transmission section is initialized regardless of the present transmission status.

12.5.5 Receive Error Flags and Transmitter Operation (Clock Synchronous Mode Only)

When a receive error flag (ORER, PER, or FER) is set to 1, the SCI will not start transmitting even if TDRE is set to 1. Be sure to clear the receive error flags to 0 before starting to transmit. Note that clearing RE to 0 does not clear the receive error flags.

12.5.6 Receive Data Sampling Timing and Receive Margin in the Asynchronous Mode

In the asynchronous mode, the SCI operates on a base clock of 16 times the bit rate frequency. In receiving, the SCI synchronizes internally with the falling edge of the start bit, which it samples on the base clock. Receive data is latched on the rising edge of the eighth base clock pulse (figure 12.21).

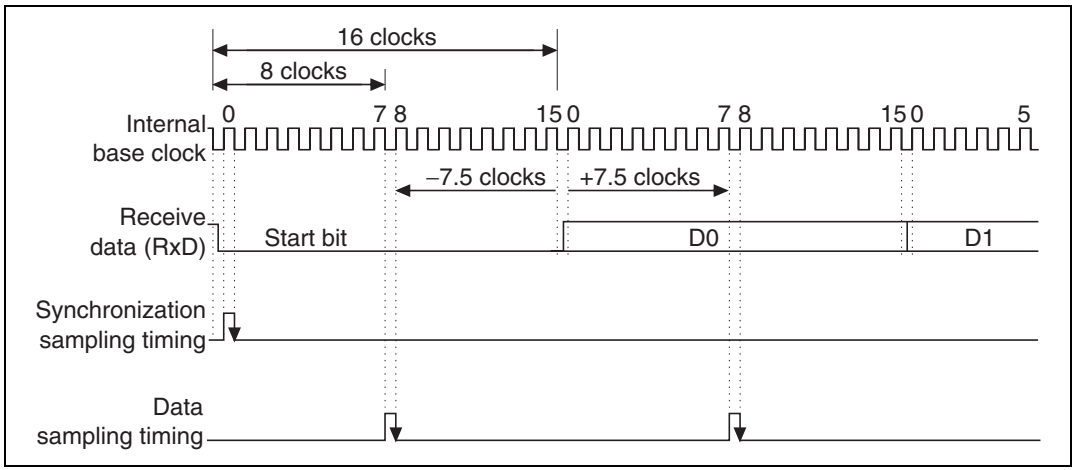

Figure 12.21 Receive Data Sampling Timing in Asynchronous Mode

The receive margin in the asynchronous mode can therefore be expressed as:

$$M = \left| \left(0.5 - \frac{1}{2N}\right) - (L - 0.5)F - \frac{|D - 0.5|}{N}(1 + F) \right| \times 100\ \%$$

Legend:
M : Receive margin (%)
N : Ratio of clock frequency to bit rate (N = 16)
D : Clock duty cycle (D = 0 – 1.0)
L : Frame length (L = 9 – 12)
F : Absolute deviation of clock frequency

From the equation above, if F = 0 and D = 0.5 the receive margin is 46.875%:

$$D = 0.5,\ F = 0$$
$$M = (0.5 - 1/(2 \times 16)) \times 100\%$$
$$= 46.875\%$$

This is a theoretical value. A reasonable margin to allow in system designs is 20 to 30%.

12.5.7 Constraints on DMAC Use

- When using an external clock source for the synchronization clock, update the TDR with the DMAC, and then after five system clocks or more elapse, input a transmit clock. If a transmit clock is input in the first four system clocks after the TDR is written, an error may occur (figure 12.22).
- Before reading the receive data register (RDR) with the DMAC, select the receive-data-full interrupt (RXI) of the SCI as a start-up source.

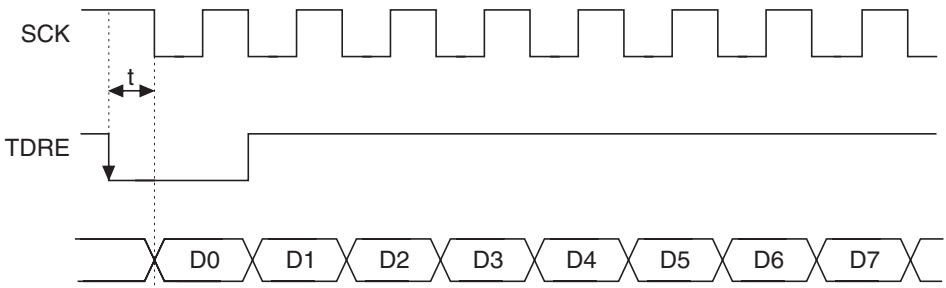

Note: During external clock operation, an error may occur if t is 4ϕ or less.

Figure 12.22 Example of Clock Synchronous Transmission with DMAC

12.5.8 Cautions for Clock Synchronous External Clock Mode

- Set TE = RE = 1 only when the external clock SCK is 1.
- Do not set TE = RE = 1 until at least four clocks after the external clock SCK has changed from 0 to 1.
- When receiving, RDRF is 1 when RE is set to zero 2.5 to 3.5 clocks after the rising edge of the RxD D7 bit SCK input, but it cannot be copied to RDR.

12.5.9 Caution for Clock Synchronous Internal Clock Mode

When receiving, RDRF is 1 when RE is set to zero 1.5 clocks after the rising edge of the RxD D7 bit SCK output, but it cannot be copied to RDR.

Section 13 High Speed A/D Converter — SH7014 —

13.1 Overview

The high speed A/D converter has 10-bit resolution, and can select from a maximum of eight channels of analog inputs.

13.1.1 Features

The high speed A/D converter has the following features:

- 10-bit resolution
- Eight input channels
- High-speed conversion
  — Minimum conversion time: 2.9 μs per channel (for 28-MHz operation)
  1.4 μs per channel during continuous conversion
- Multiple conversion modes
  — Select mode/group mode
  — Single mode/scan mode
  — Buffered operation possible
  — 2 channel simultaneous sampling possible
- Two types of conversion start
  — Software, or timer conversion start trigger (MTU) can be selected.
- Eight data registers
  — Conversion results stored in 16-bit data registers corresponding to each channel.
- Sample and hold function
- A/D conversion end interrupt generation
  — An A/D conversion end interrupt (ADI) request can be generated on completion of A/D conversions

13.1.2 Block Diagram

Figure 13.1 is the block diagram of the high speed A/D converter.

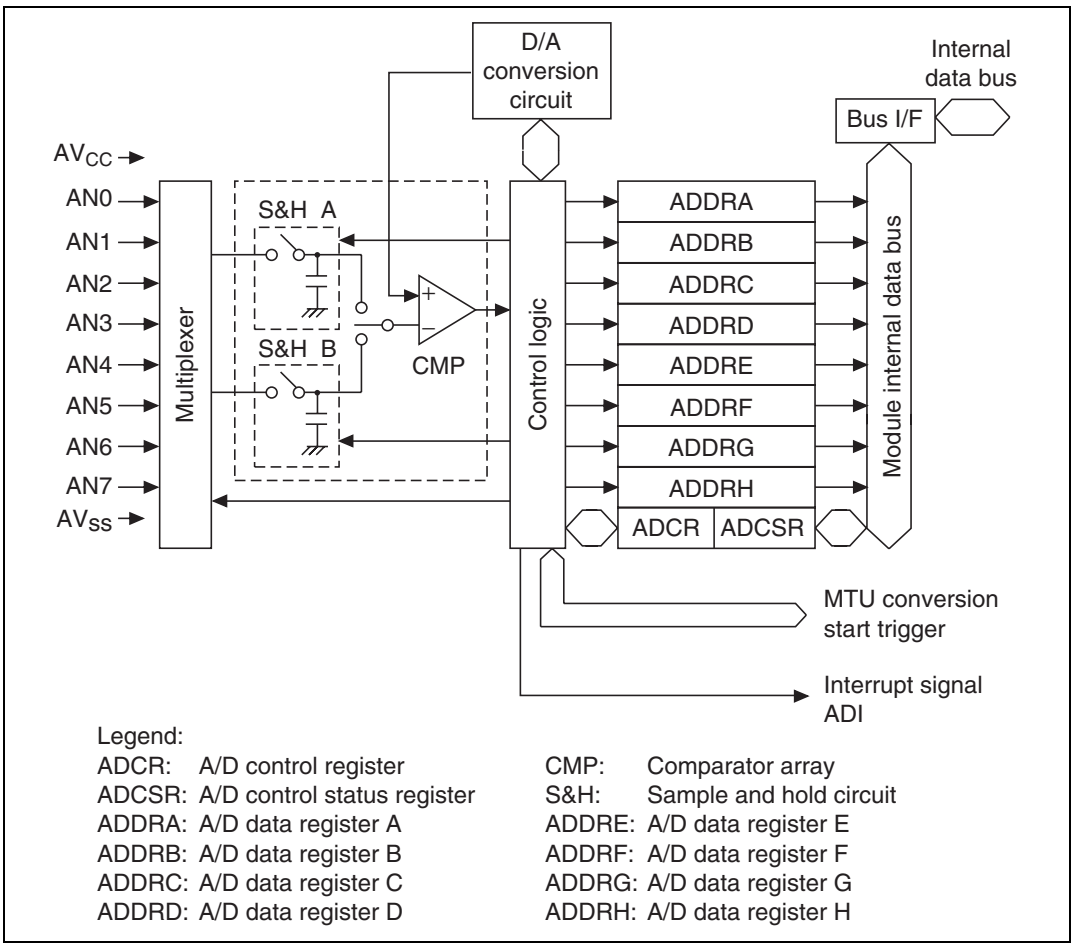

Figure 13.1 High Speed A/D Converter Block Diagram

13.1.3 Pin Configuration

Table 13.1 shows the input pins used by the high speed A/D converter.

The AV_{CC} and AV_{SS} pins are for the high speed A/D converter internal analog section power supply.

Table 13.1 Pin Configuration

Pin	Abbreviation	I/O	Function
Analog supply	AV_{CC}	I	Analog section power supply
Analog ground	AV_{SS}	I	Analog section ground and A/D conversion reference voltage
Analog input 0	AN0	I	Analog input channel 0
Analog input 1	AN1	I	Analog input channel 1
Analog input 2	AN2	I	Analog input channel 2
Analog input 3	AN3	I	Analog input channel 3
Analog input 4	AN4	I	Analog input channel 4
Analog input 5	AN5	I	Analog input channel 5
Analog input 6	AN6	I	Analog input channel 6
Analog input 7	AN7	I	Analog input channel 7

13.1.4 Register Configuration

Table 13.2 shows the configuration of the high speed A/D converter registers.

Table 13.2 Register Configuration

Name	Abbreviation	R/W	Initial Value	Address	Access Size
A/D data register A	ADDRA	R	H'0000	H'FFFF83F0	8,16
A/D data register B	ADDRB	R	H'0000	H'FFFF83F2	
A/D data register C	ADDRC	R	H'0000	H'FFFF83F4	
A/D data register D	ADDRD	R	H'0000	H'FFFF83F6	
A/D data register E	ADDRE	R	H'0000	H'FFFF83F8	
A/D data register F	ADDRF	R	H'0000	H'FFFF83FA	
A/D data register G	ADDRG	R	H'0000	H'FFFF83FC	
A/D data register H	ADDRH	R	H'0000	H'FFFF83FE	
A/D control/status register	ADCSR	R/(W)*	H'00	H'FFFF83E0	
A/D control register	ADCR	R/W	H'00	H'FFFF83E1	

Note: * Only 0 can be written to bit 7 to clear the flag.

13.2 Register Descriptions

13.2.1 A/D Data Registers A to H (ADDRA to ADDRH)

Bit:	15	14	13	12	11	10	9	8
	—	—	—	—	—	—	AD9	AD8
Initial value:	0	0	0	0	0	0	0	0
R/W:	R	R	R	R	R	R	R	R

Bit:	7	6	5	4	3	2	1	0
	AD7	AD6	AD5	AD4	AD3	AD2	AD1	AD0
Initial value:	0	0	0	0	0	0	0	0
R/W:	R	R	R	R	R	R	R	R

The ADDR are 16-bit read only registers for storing A/D conversion results. There are eight of these registers, ADDRA through ADDRH.

The A/D converted data is 10-bit data which is sent to the ADDR for the corresponding converted channel for storage. The lower 8 bits of the A/D converted data are transferred to and stored in the lower byte (bits 7 to 0) of the ADDR, and the upper 2 bits are stored into the upper byte (bits 9, 8). Bits 15 to 10 always read as 0. Data reads can be either byte or word. The upper 8 bits of the converted data are transferred upon byte data reads. Additionally, buffered operation is possible by combining ADDRA to ADDRD.

Table 13.3 shows the correspondence between the analog input channels and the ADDR.

The ADDR are initialized to H'0000 by power-on reset or in standby mode.

Table 13.3 Analog Input Channel and ADDR Correspondence

Analog Input Channel	A/D Data Register
AN0	ADDRA*
AN1	ADDRB*
AN2	ADDRC*
AN3	ADDRD*
AN4	ADDRE
AN5	ADDRF
AN6	ADDRG
AN7	ADDRH

Note: * Except during buffer operation

13.2.2 A/D Control/Status Register (ADCSR)

Bit:	7	6	5	4	3	2	1	0
	ADF	ADIE	ADST	CKS	GRP	CH2	CH1	CH0
Initial value:	0	0	0	0	0	0	0	0
R/W:	R/(W)*	R/W	R/W	R/W	R/W	R/W	R/W	R/W

Note: * Only 0 can be written to bit 7 to clear the flag.

The ADCSR is an 8-bit read/write register used for A/D conversion operation control and to indicate status.

The ADCSR is initialized to H'00 by power-on reset or in standby mode.

Bit 7—A/D End Flag (ADF): This status flag indicates that A/D conversion has ended.

Bit 7 ADF	Description
0	[Clear conditions] (initial value) • With ADF = 1, by reading the ADF flag then writing 0 in ADF • When the DMAC is activated by an ADI interrupt
1	[Set conditions] • Single mode: When A/D conversion ends after conversion for all designated channels (during buffer operation, this is not set until operation of the specified buffer has ended) • Scan mode: After one round of A/D conversion for all specified channels

Bit 6—A/D Interrupt Enable (ADIE): Enables or disables interrupt requests (ADI) after A/D conversion ends. Set the ADIE bit while conversion is suspended.

Bit 6 ADIE	Description
0	Disables interrupt requests (ADI) after A/D conversion ends (initial value)
1	Enables interrupt requests (ADI) after A/D conversion ends

Bit 5—A/D Start (ADST): Selects start or stop for A/D conversion. A 1 is maintained during A/D conversions.

The ADST bit can be set to 1 by software, or timer conversion start triggers.

Bit 5 ADST	Description
0	A/D conversion halted (initial value)
1	• Single mode: Start A/D conversion. Automatically cleared to 0 after conversion for the designated channel ends. • Scan mode: Start A/D conversion. Continuous conversion until 0 cleared by software.

Bit 4—Clock Select (CKS): Sets the A/D conversion time. Set so that the conversion time is 2 μs or greater in proportion to the operating frequency.

Make conversion time changes only while conversion is halted.

Bit 4 CKS	Description	
0	Conversion time = 40 states (high speed A/D converter standard clock = ϕ/2)	(initial value)
1	Conversion time = 80 states (when ϕ/4 is selected)	

Bit 3—Group Mode (GRP): Designates either select mode or group mode for the A/D conversion channel selection.

Set the GRP bit only while conversion is halted.

Bit 3 GRP	Description	
0	Select mode	(initial value)
1	Group mode	

Bits 2 to 0—Channel Select 2 to 0 (CH2 to CH0): These bits, along with the GRP bit, select the analog input channel.

Set the input channel only while conversion is halted.

Bit 2 CH2	Bit 1 CH1	Bit 0 CH0	Description	
			Select Mode (GRP = 0)	Group Mode (GRP = 1)
0	0	0	AN0 (initial value)	AN0
		1	AN1	AN0 to AN1
	1	0	AN2	AN0 to AN2
		1	AN3	AN0 to AN3
1	0	0	AN4	AN0 to AN4
		1	AN5	AN0 to AN5
	1	0	AN6	AN0 to AN6
		1	AN7	AN0 to AN7

13.2.3 A/D Control Register (ADCR)

Bit:	7	6	5	4	3	2	1	0
	—	PWR	TRGS1	TRGS0	SCAN	DSMP	BUFE1	BUFE0
Initial value:	0	0	0	0	0	0	0	0
R/W:	R	R/W	R/W	R/W	R/W	R/W	R/W	R/W

The ADCR is an 8-bit read/write register used for A/D conversion operation control. The ADCR is initialized to H'00 by power-on reset or in standby mode.

Bit 7—Reserved: This bit always reads as 0. The write value should always be 0.

Bit 6—Power (PWR): Designates the conversion start mode for the high speed A/D converter. Setting the PWR bit to 1 sets high speed start mode, and a 0 sets to low power conversion mode. See section 13.4.7, Conversion Start Modes for details on the conversion start operation.

Set the PWR bit only while conversion is halted.

Bit 6 PWR	Description	
0	Low power conversion mode	(initial value)
1	High speed start mode	

Bits 5 and 4—Timer Trigger Select 1, 0 (TRGS1, TRGS0): These bits enable or prohibit A/D conversion starts by trigger signals.

Set the TRGS1, TRGS0 bits only while conversion is halted.

Bit 5 TRGS1	Bit 4 TRGS0	Description	
0	0	Enable A/D conversion start by software	(initial value)
	1	Enables A/D conversion start by MTU conversion start trigger	
1	0	Reserved	
	1	Reserved	

Bit 3—Scan Mode (SCAN): Selects either single mode or scan mode for the A/D conversion operation mode. See section 13.4, Operation, for details on single mode and scan mode operation.

Set the SCAN bit only while conversion is halted.

Bit 3 SCAN	Description	
0	Single mode	(initial value)
1	Scan mode	

Bit 2—Simultaneous Sampling (DSMP): Enables or disables the simultaneous sampling of two channels. See section 13.4.6, Simultaneous Sampling Operation, for details on simultaneous sampling.

Set the DSMP bit only while conversion is halted.

Bit 2 DSMP	Description	
0	Normal sampling operation	(initial value)
1	Simultaneous sampling operation	

Bits 1 and 0—Buffer Enable 1, 0 (BUFE1, BUFE0): These bits select whether to use the ADDRB to ADDRD as buffer registers.

Set the BUFE1 and BUFE0 bits only while conversion is halted.

Bit 1 BUFE1	Bit 0 BUFE0	Description	
0	0	Normal operation	(initial value)
	1	ADDRA and ADDRB buffer operation: conversion result → ADDRA → ADDRB (ADDRB is the buffer register)	
1	0	ADDRA and ADDRC, also ADDRB and ADDRD buffer operation: conversion result 1 → ADDRA → ADDRC, conversion result 2 → ADDRB → ADDRD (ADDRC and ADDRD are buffer registers)	
	1	ADDRA to ADDRD buffer operation: conversion result → ADDRA → ADDRB → ADDRC → ADDRD (ADDRB to ADDRD are buffer registers)	

13.3 Bus Master Interface

The ADDRA to ADDRH are 16-bit registers with a 16-bit width data bus to the bus master. The bus master can read from ADDRA to ADDRH in either word or byte units.

When an ADDR is read in word units, the ADDR contents are transferred to the bus master 16 bits at a time. In byte unit reads, the contents of the most significant eight bits (AD9 to AD2) of the converted data (AD9 to AD0) are transferred to the bus master.

Figures 13.2 (1) and (2) show an example of the ADDR read operation.

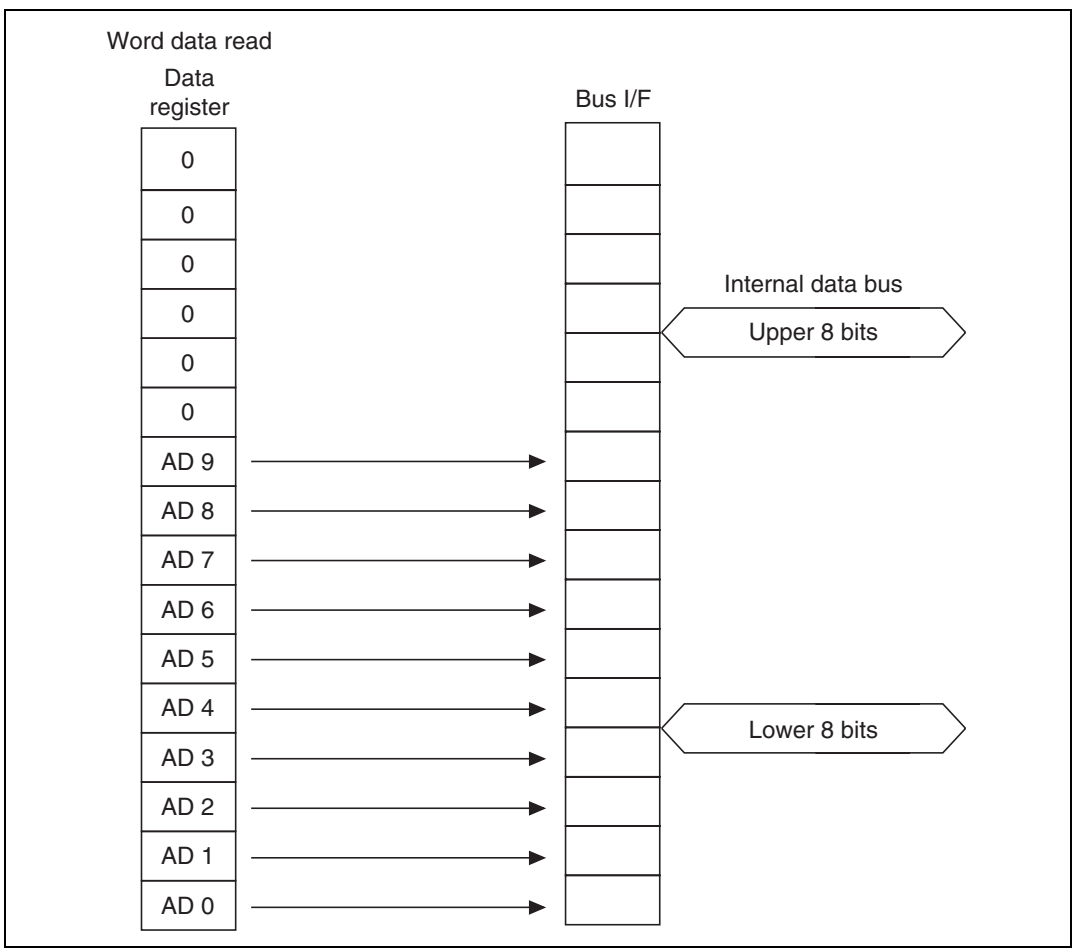

Figure 13.2 ADDR Read Operation (1)

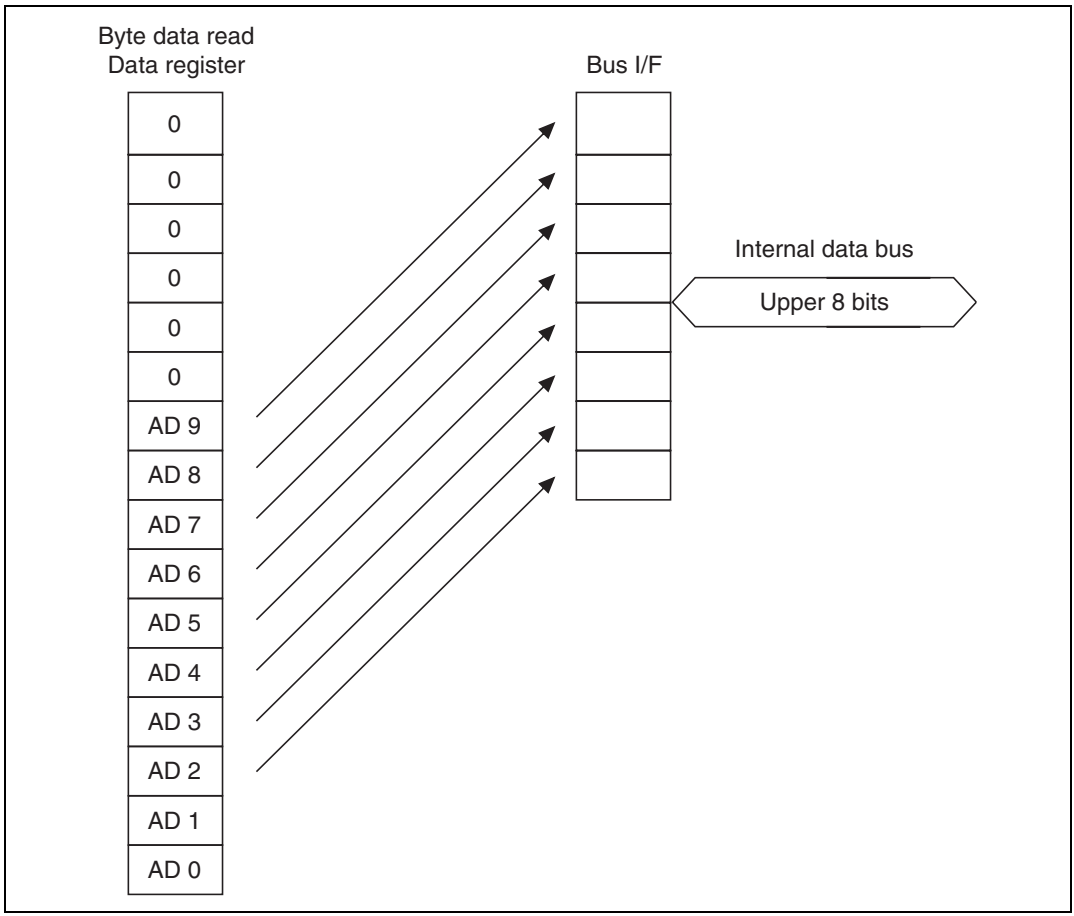

Figure 13.2 ADDR Read Operation (2)

13.4 Operation

- The high speed A/D converter has 10-bit resolution.
- In addition to the four operating modes of select or group, and single or scan can be set in combination with buffer operation.
- Select mode uses one channel and group mode selects multiple channels.
- One start in the single mode performs conversions on all selected channels, and one start in the scan mode performs repeated conversions until stopped by software.
- In buffer operation, the previous conversion result is saved in a buffer register at the end of a conversion for the relevant channel.
- In simultaneous sampling operation, the analog input voltages of two channels are sampled simultaneously then converted in order.
- Software, a timer conversion start trigger (MTU) can be selected as the conversion start condition.
- High speed start mode or low power conversion mode can be selected for A/D conversion using the PWR bit setting.
- When changing the operation mode or input channel, rewrite the ADCSR, ADCR while the ADST bit is cleared to 0. After rewriting the ADCSR, ADCR, A/D conversion will be restarted when the ADST bit is set to 1. Operation mode or input channel changes can be made simultaneously with ADST bit setting. When stopping an A/D conversion before completion, 0 clear the ADST bit.

13.4.1 Select-Single Mode

Choose select-single mode when doing A/D conversions for one channel only.

When the ADST bit is set to 1, A/D conversion is started according to the designated conversion start conditions. The ADST bit is held to 1 during the A/D conversion and is automatically cleared to 0 upon completion.

The ADF flag is also set to 1 at the end of conversion. If the ADIE bit is set to 1 at this time, an ADI interrupt request is generated. The ADF flag is cleared by reading the ADCSR, then writing a 0.

Figure 13.3 shows an example of operation in the select-single mode when AN1 is selected.

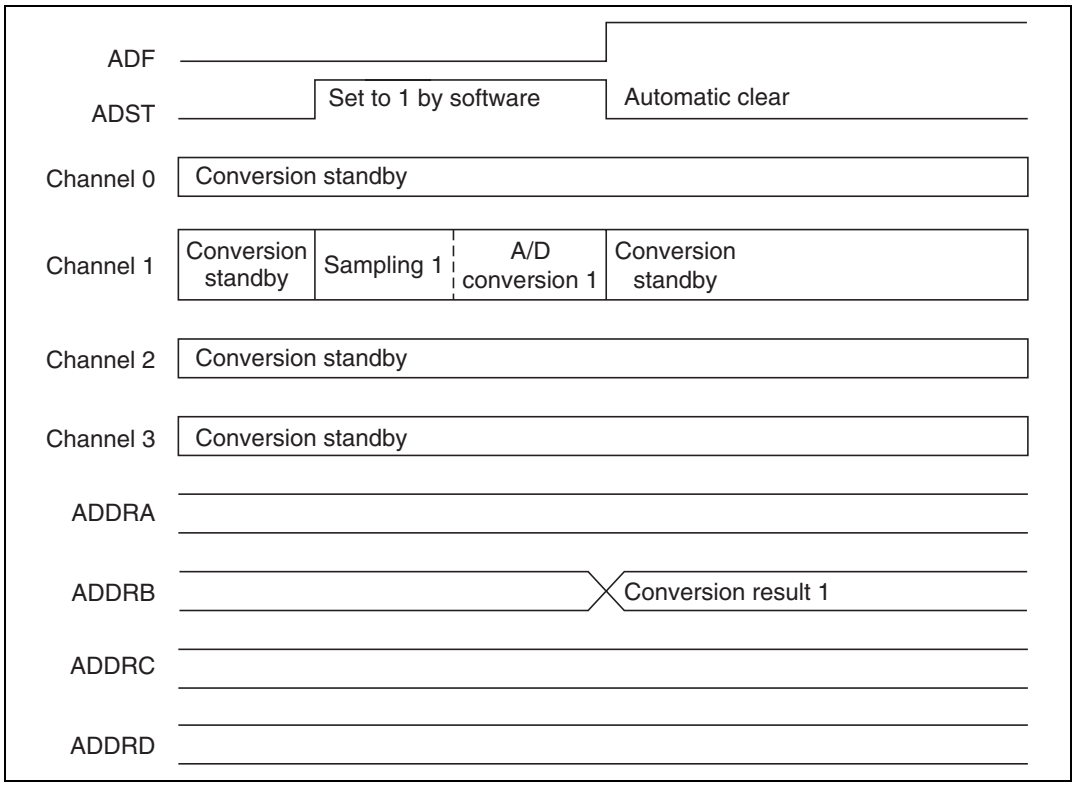

Figure 13.3 High Speed A/D Converter Operation Example (Select-Single Mode)

13.4.2 Select-Scan Mode

Choose select-scan mode when doing repeated A/D conversions for one channel. This is useful when doing continuous monitoring of the analog input of one channel.

When the ADST bit is set to 1, A/D conversion is started according to the designated conversion start conditions. The ADST bit is held to 1 until 0 cleared by software. A/D conversion for the selected input channel is repeated during that interval.

The ADF flag is set to 1 at the end of the first conversion. At this point, if the ADIE bit is set, an ADI interrupt request is issued, and the high speed A/D converter is halted. With the high speed A/D converter in stop mode due to an ADI interrupt request, conversion is restarted when the ADF flag is cleared to 0. The ADF flag is cleared by reading the ADCSR then writing a 0.

Figure 13.4 shows an example of operation in the select-scan mode when AN1 is selected.

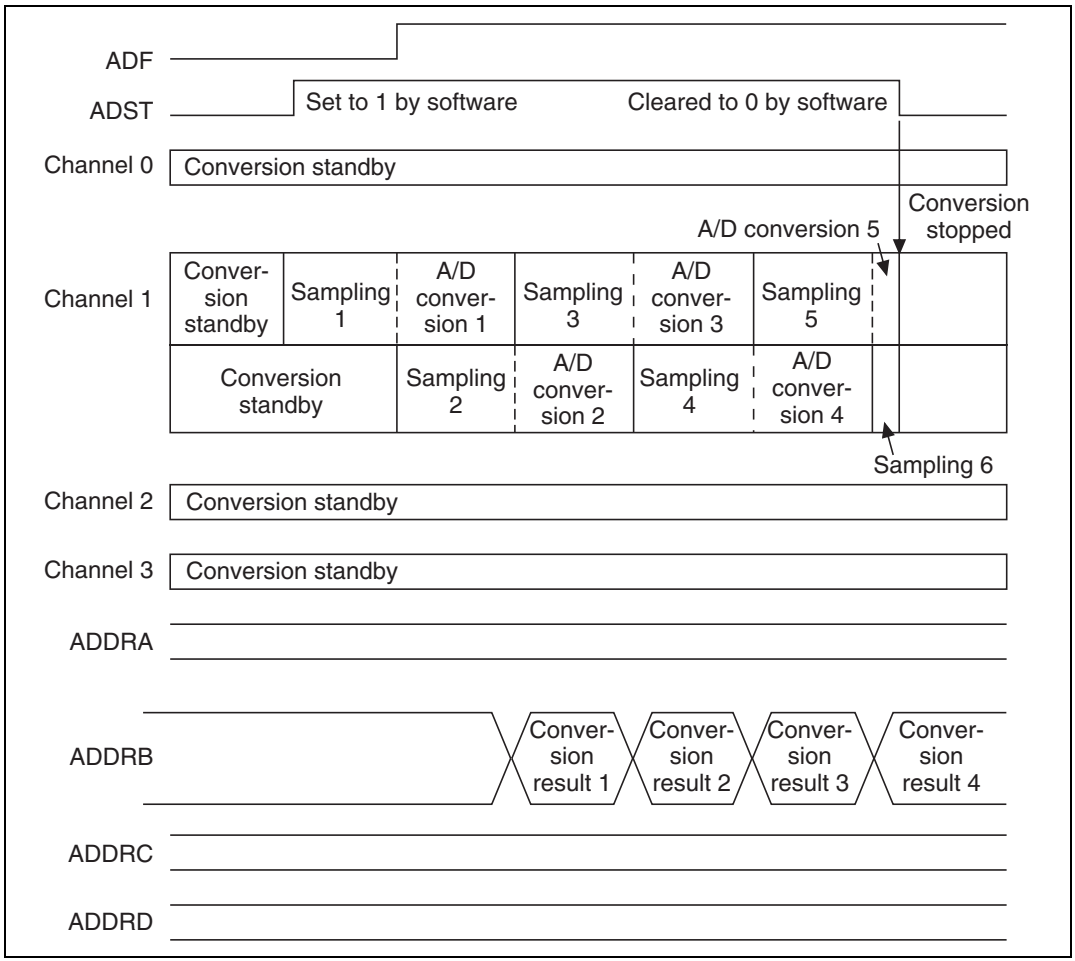

Figure 13.4 High Speed A/D Converter Operation Example (Select-Scan Mode)

13.4.3 Group-Single Mode

Choose group-single mode when doing A/D conversions for multiple channels.

When the ADST bit is set to 1, A/D conversion is started according to the designated conversion start conditions. The ADST bit is held to 1 during A/D conversion and is automatically cleared to 0 when all conversions for the designated input channels are completed.

The ADF flag is set to 1 when all conversions for the designated input channels are completed. If the ADIE bit is set to 1 at this time, an ADI interrupt request is generated. The ADF flag is cleared by reading the ADCSR then writing a 0.

Figure 13.5 shows an example of operation in the group-single mode when AN0 to AN2 are selected.

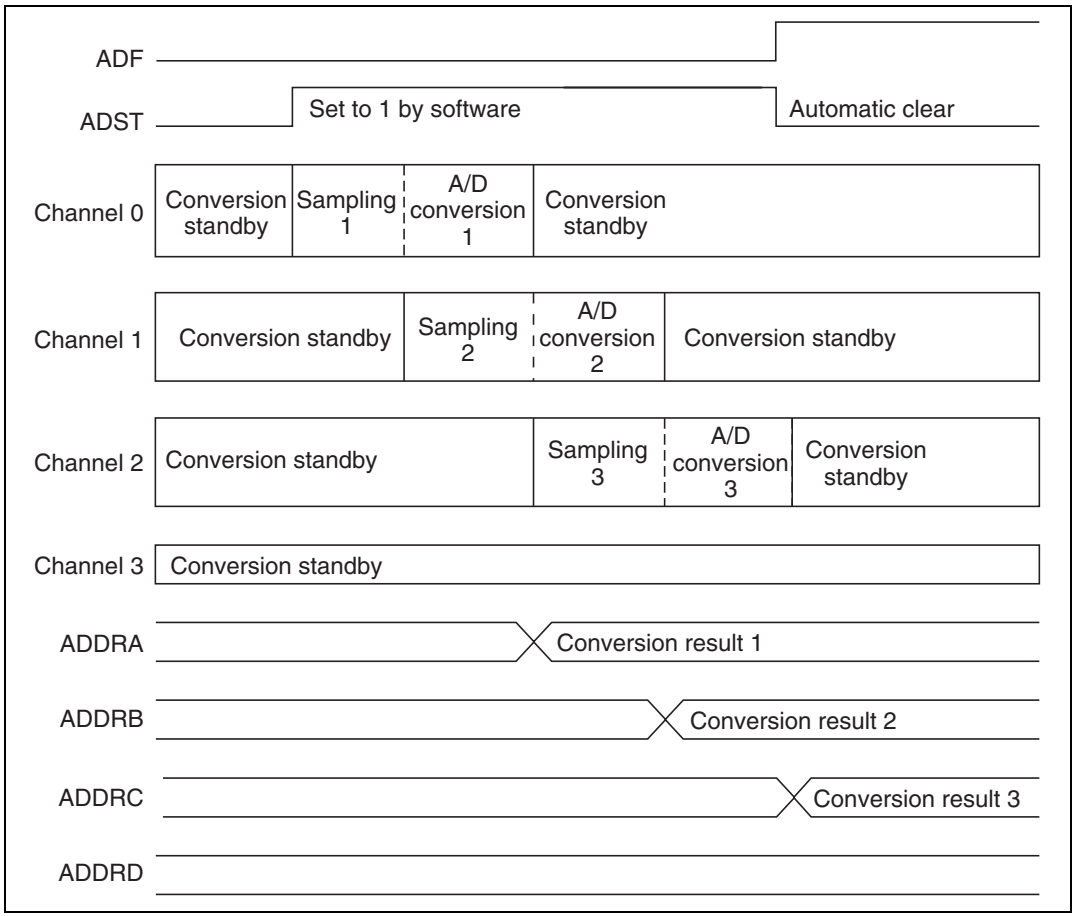

Figure 13.5 High Speed A/D Converter Operation Example (Group-Single Mode)

13.4.4 Group-Scan Mode

Choose group-scan mode when doing repeated A/D conversions for multiple channels. This is useful when doing continuous monitoring of the analog inputs of multiple channels.

When the ADST bit is set to 1, A/D conversion is started according to the designated conversion start conditions. The ADST bit is held to 1 until 0 cleared by software. A/D conversion for the selected input channels is repeated during that interval.

The ADF flag is set to 1 at the completion of the first conversions of all the designated input channels. At this point, if the ADIE bit is set to 1, an ADI interrupt request is issued, and the high speed A/D converter is temporarily halted. With the high speed A/D converter in stop mode due to an ADI interrupt request, conversion is restarted when the ADF flag is cleared to 0. The ADF flag is cleared by reading the ADCSR, then writing a 0.

Figure 13.6 shows an example of operation in the group-scan mode when AN0 to AN2 are selected.

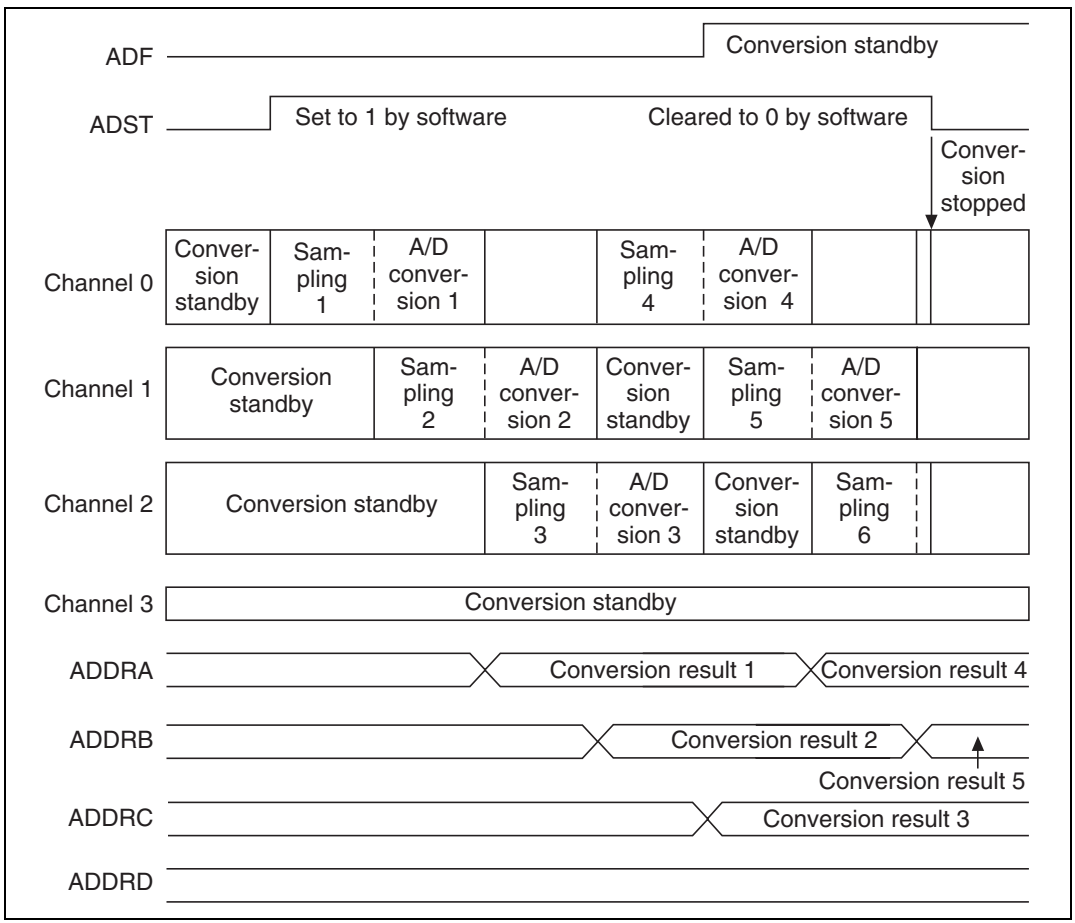

Figure 13.6 High Speed A/D Converter Operation Example (Group-Scan Mode)

13.4.5 Buffer Operation

When conversion ends on the relevant channel, the conversion result is stored in the ADDR, and simultaneously, the previously stored result is transferred to another ADDR. Buffer operation can be selected from the following:

- AN0 → ADDRA → ADDRB (Two-stage, one-group operation)
- AN0 → ADDRA → ADDRC, AN1 → ADDRB → ADDRD (Two-stage, two-group operation)
- AN0 → ADDRA → ADDRB → ADDRC → ADDRD (Four-stage, one-group operation)

To use in combination with simultaneous sampling, set GRP = 1, BUFE1, BUFE0 = B'10 and CH2 = 0. Buffer operation timing is shown in figure 13.7.

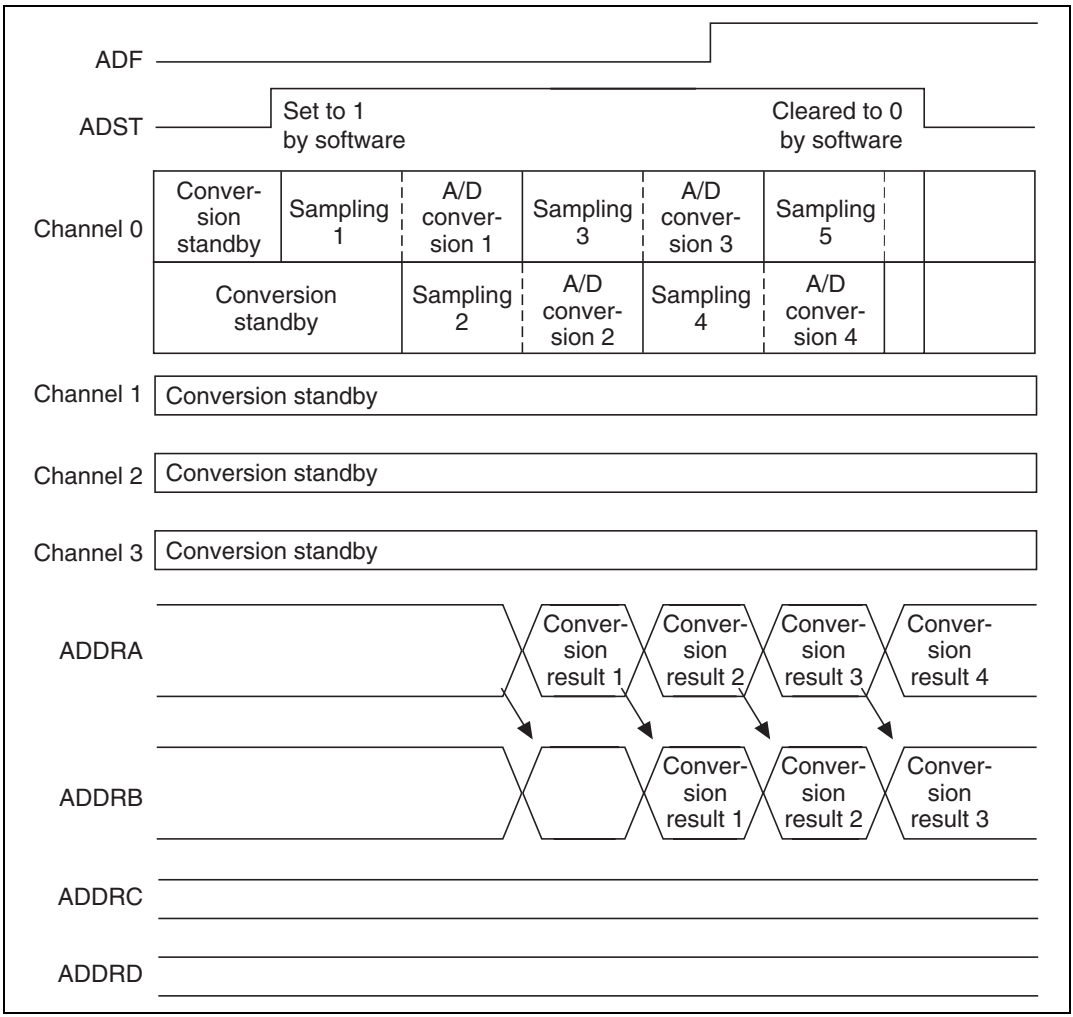

Figure 13.7 Buffer Operation Example
(Select Scan Mode: Two-Stage One-Group Operation, When CH2 to CH0 = B'001)

Buffer-Only Operation: When performing conversion only on the analog input channels specified by the BUFE1 and BUFE0 bits, select group mode, and you can select the ADF flag setting conditions with the CH2 to CH0 bits.

Table 13.4 shows conversion during buffer operation and ADF flag setting conditions. The ADF flag is set at the point in the table when the final conversion has ended. In single mode, conversion is halted after the ADF flag is set to 1. In scan mode, conversion continues, and the converted data is stored in sequence in the buffer registers specified by the BUFE1 and BUFE0 bits.

When the ADF flag is set to 1, if the ADIE bit is also set to 1, an ADI interrupt is issued. After the ADCSR is read, the ADF flag is cleared by a 0 write.

With select single mode, the high speed A/D converter goes into standby mode at the end of every conversion cycle. The high speed A/D converter is restarted by software, or a timer trigger. When the number of conversion cycles shown in table 13.4 have ended, the ADF flag is set to 1.

Table 13.4 Conversion Channel and ADF Flag Setting/Clearing Conditions During Buffer Operation 1

Channel Setting			Sampling Channel		
CH2	**CH1**	**CH0**	**BUFE1, BUFE0 = B'01**	**BUFE1, BUFE0 = B'10**	**BUFE1, BUFE0 = B'11**
0	0	0	AN0 1 time (ADDRA)	AN0, AN1 1 time (ADDRB)	AN0 1 time (ADDRA)
		1	AN0 2 times (ADDRB)		AN0 2 times (ADDRB)
	1	0	*	AN0, AN1 2 times (ADDRD)	AN0 3 times (ADDRC)
		1	*		AN0 4 times (ADDRD)
1	—	—	*	*	*

Note: * See table 13.5.

Combined Group Mode and Buffer Operation: Continuous conversion is possible on analog input channels (AN0 and AN1) specified by bits BUFE1 and BUFE0 as well as AN4 to AN7 due to setting of bits CH2 to CH0.

Table 13.5 shows conversion during buffer operation and ADF flag setting conditions. The ADF flag is set at the point in the table when the final conversion has ended. In this case, conversion is performed on the analog input corresponding with the ADDR specified in the buffer register. For example, when BUFE1 and BUFE0 = B'11 and CH2 to CH0 = B'110, conversion results are stored in ADDRA and ADDRE to ADDRG. Also, contents of ADDRA to ADDRC before the start of conversion are transferred to ADDRB to ADDRD.

In single mode, conversion is halted after the ADF flag has been set to 1. Conversion continues in scan mode.

Table 13.5 Conversion Channel and ADF Flag Setting/Clearing Conditions During Buffer Operation 2

Channel Setting			Sampling Channel		
CH2	CH1	CH0	BUFE1, BUFE0 = B'01	BUFE1, BUFE0 = B'10	BUFE1, BUFE0 = B'11
0	0	—	*	*	*
	1	0	AN0, AN2 (ADDRC)		
		1	AN0, AN2, AN3 (ADDRD)		
1	0	0	AN0, AN2 to AN4 (ADDRE)	AN0, AN1, AN4 (ADDRE)	AN0, AN4 (ADDRE)
		1	AN0, AN2 to AN5 (ADDRF)	AN0, AN1, AN4, AN5 (ADDRF)	AN0, AN4, AN5 (ADDRF)
	1	0	AN0, AN2 to AN6 (ADDRG)	AN0, AN1, AN4 to AN6 (ADDRG)	AN0, AN4 to AN6 (ADDRG)
		1	AN0, AN2 to AN7 (ADDRH)	AN0, AN1, AN4 to AN7 (ADDRH)	AN0, AN4 to AN7 (ADDRH)

Note: * See table 13.4.

ADF Flag Clearing: When the DMAC is started up due to an A/D conversion end interrupt, the ADF flag is cleared when the ADDR specified in table 13.4 or 13.5 has been read.

Resetting the Number of Buffer Operations: Clear the BUFE1 and BUFE0 bits to B'00 in conversion standby mode or when the converter has been halted. The number of buffer operations is cleared to 0.

Updating Buffer Operations: Clear the BUFE1 and BUFE0 bits to B'00 in conversion standby mode or when the converter has been halted. Thereafter, set BUFE1 and BUFE0, and the buffer operations shown in table 13.4 and 13.5 are performed when conversion is resumed.

13.4.6 Simultaneous Sampling Operation

With simultaneous sampling, continuous conversion is conducted with sampling of the input voltages on two channels at the same time. Simultaneous sampling is valid in group mode. Channels for sampling are determined by the CH2 and CH1 bits of the RDSCR. The combinations are shown in table 13.6. For example, if GRP = 1 when CH2 and CH1 = B'11, sampling occurs in order in the following pairs: AN0, AN1→AN2, AN3→AN4, AN5→AN6, AN7. Sampling timing is shown in figure 13.9.

Table 13.6 Simultaneous Sampling Channels

Channel Setting		
CH2	**CH1**	**Sampling Channels, GRP 1**
0	0	AN0, AN1
	1	AN0, AN1 → AN2, AN3
1	0	AN0, AN1 → AN2, AN3 → AN4, AN5
	1	AN0, AN1 → AN2, AN3 → AN4, AN5 → AN6, AN7

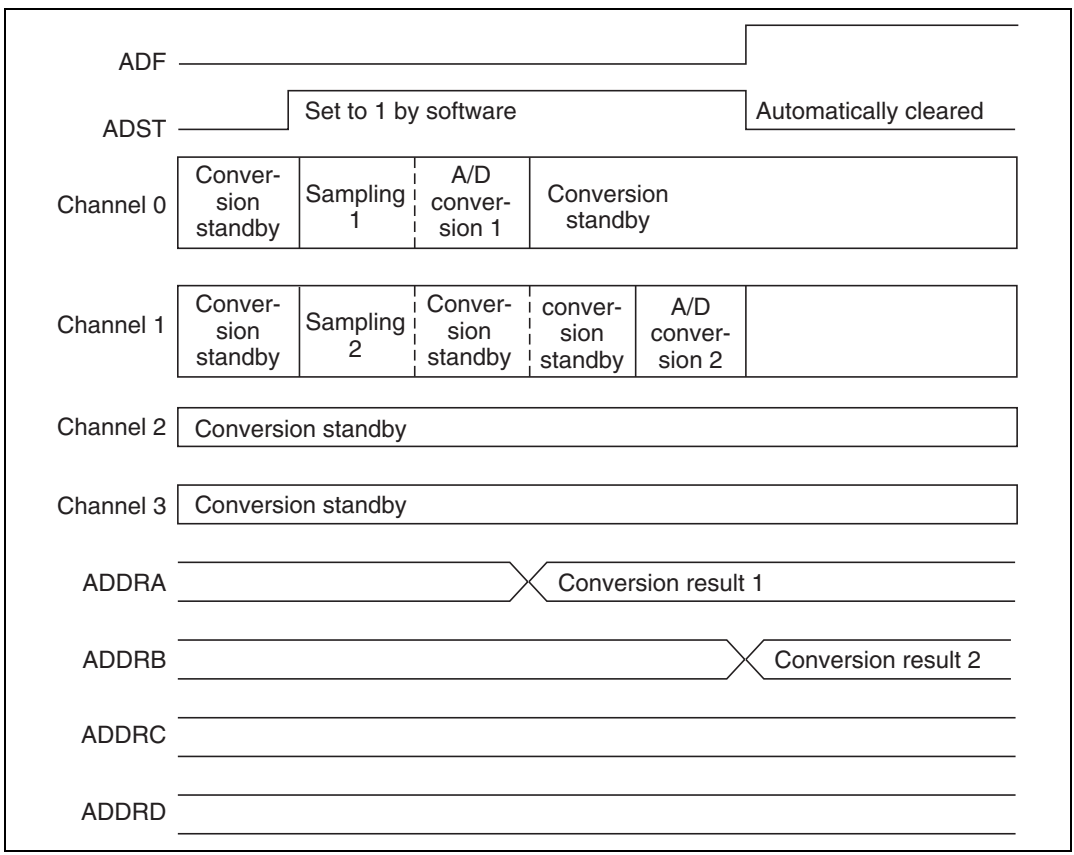

Figure 13.8 Simultaneous Sampling Operation (Group Single Mode)

13.4.7 Conversion Start Modes

The conversion start mode of the high speed A/D converter is set by the PWR bit of the ADCSR. When the PWR bit is cleared to 0, low-power conversion mode is set and the internal analog circuit becomes inactive. High-speed start mode is set by setting the PWR bit to 1, and the analog circuit becomes active.

In the low-power conversion mode, power is applied to the analog circuitry simultaneous to the conversion start (ADST set). When 200 cycles of the reference clock have elapsed, conversion becomes possible for the analog circuit and the first A/D conversion begins. When performing consecutive conversions, the second and later conversions are executed in 20 cycles. Select the basic clock with the CKS bit of the ADCSR. When the A/D conversion ends, ADST is cleared to 0 and the analog circuit power supply is automatically cut off. Because the analog circuit is only active during the A/D conversion operation period in this mode, current consumption can be reduced.

In high-speed start mode, ADST is cleared to 0 when A/D conversion ends. Power continues to be supplied to the analog circuitry, and conversion-ready status is maintained. Conversion is restarted immediately by resetting ADST to 1. However, the first conversion after power-on begins 200 cycles after setting ADST. Clear the PWR bit to 0 to switch off the analog power supply. When performing consecutive conversions, the second and later conversions are executed in 20 cycles. Because the analog circuit is always active in this mode, A/D conversion can be executed at high speed.

When A/D conversion is forcibly halted by clearing the ADST bit to 0 during conversion in high-speed start mode (when ADST = 1), the first conversion following a restart may not be performed normally. The second and subsequent conversions are performed normally.

Figures 13.9 and 13.10 show the timing of the conversion start operation.

Figures 13.9 and 13.10 show examples of conversion start operation timing.

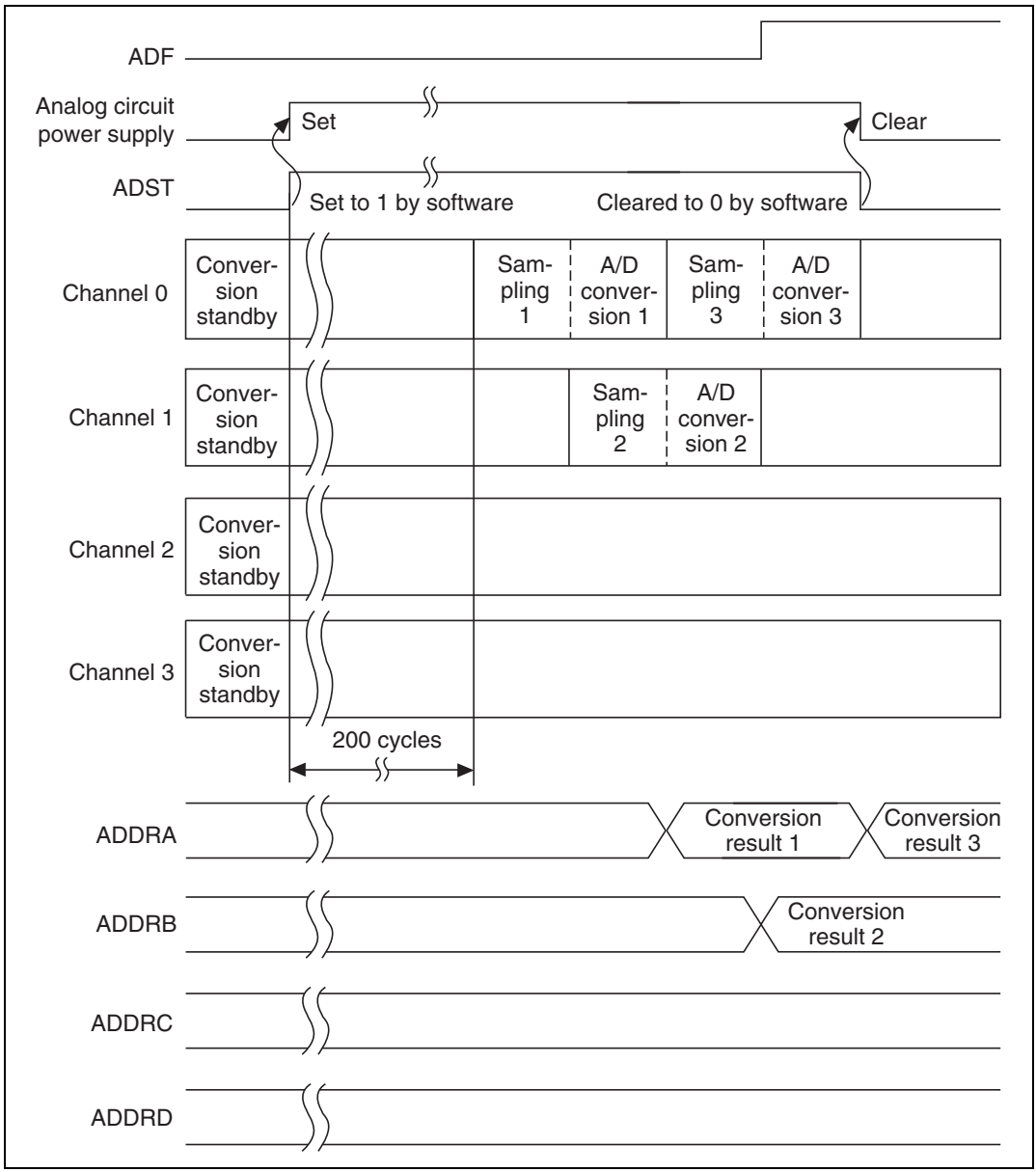

Figure 13.9 Conversion Start Operation (Low-Power Conversion Mode)

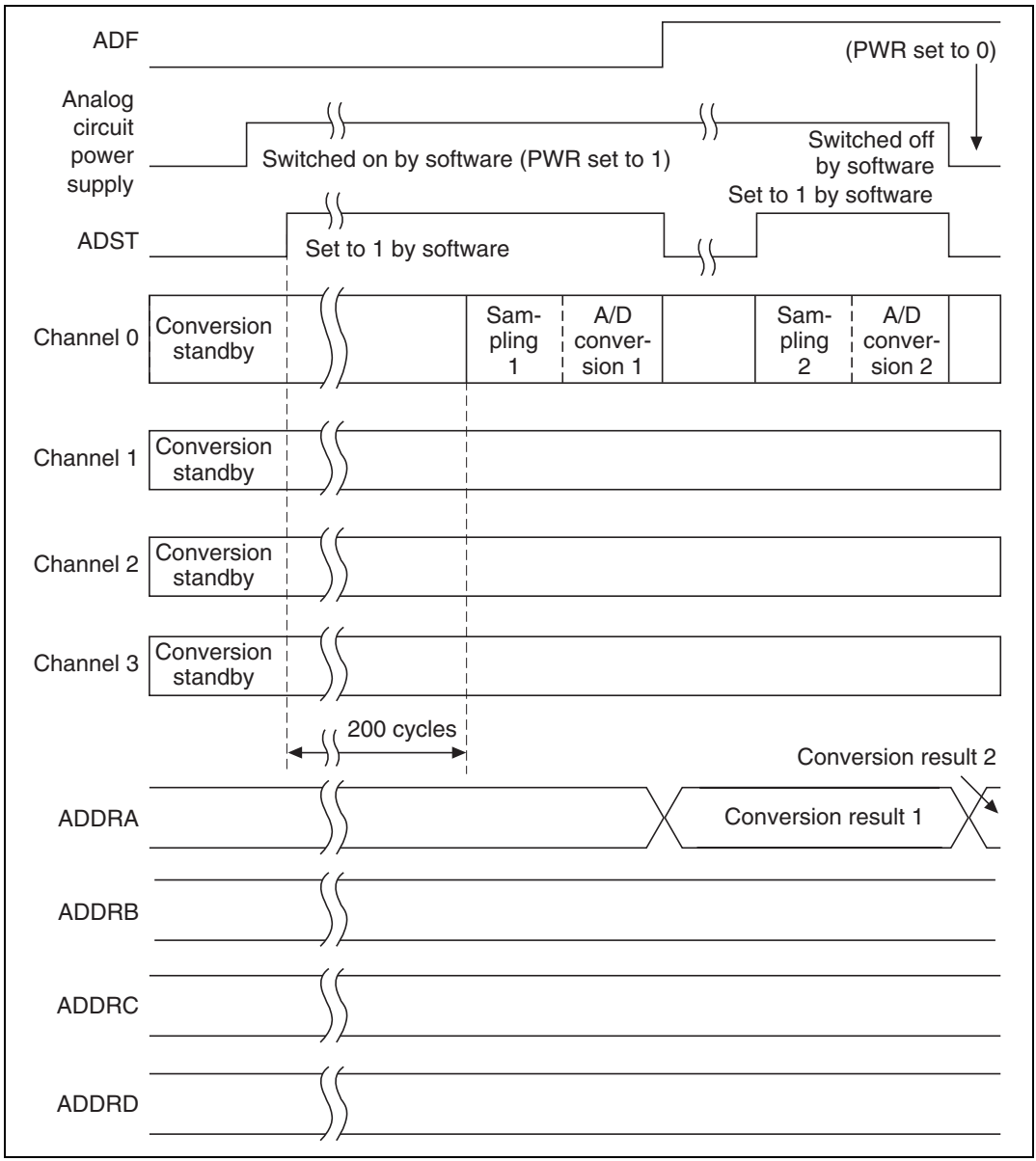

Figure 13.10 Conversion Start Operation (High-Speed Start Mode)

13.4.8 A/D Conversion Time

The high speed A/D converter has an on-chip sample and hold circuit. The high speed A/D converter samples the input at time t_D after the ADST bit is set to 1, and then starts the conversion.

The A/D conversion time t_{CONV} is the sum of the conversion start delay time t_D, the input sampling time t_{SPL}, and the operating time t_{CP}. This conversion time is not a set value, but is decided by the t_D ADCSR write timing, or the timer conversion start trigger generation timing.

Figure 13.11 shows an example of A/D conversion timing. Table 13.7 lists A/D conversion times.

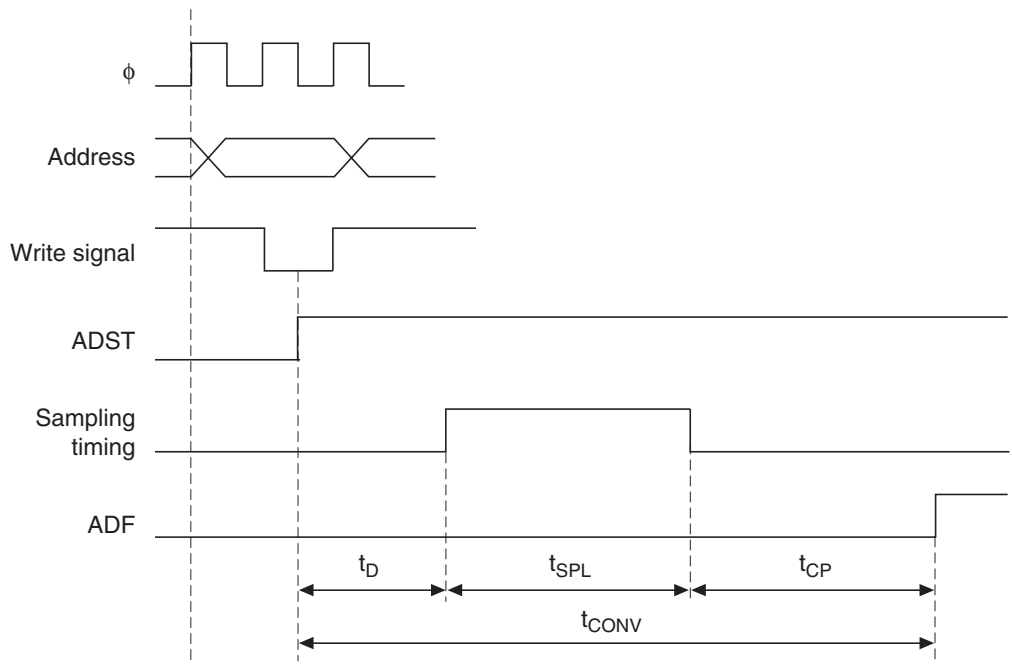

Legend:
t_D: A/D conversion start delay time
t_{SPL}: Input sampling time
t_{CONV}: A/D conversion time
t_{CP}: Operation time

Figure 13.11 A/D Conversion Timing

Table 13.7 A/D Conversion Times

Time	Symbol	CKS = 0 Min	CKS = 0 Typ	CKS = 0 Max	CKS = 1 Min	CKS = 1 Typ	CKS = 1 Max
A/D conversion start delay time	t_D	1.5	1.5	1.5	1.5	1.5	1.5
Input sampling time	t_{SPL}	20	20	20	40	40	40
A/D conversion time	t_{CONV}	42.5	42.5	42.5	82.5	82.5	82.5

Notes: 1. Unit: states
2. Table entries are for when PWR = 1. If 200 states have not elapsed since the ADST bit has been set, no conversions are done until after those 200 states have occurred. When PWR = 0, add 200 states to the first A/D conversion start delay time. When two or more conversions are performed in succession, tcp is 20 cycles when CKS = 0, and 40 cycles when CKS = 1.

The CKS bit of the ADCSR is the operation time t_{CONV}, but set so that this is 2 μs or greater. Table 13.8 shows the operating frequency and CKS bit settings.

Table 13.8 Operating Frequency and CKS Bit Settings

CKS	Conversion Time (States)	Minimum Conversion Time (μs) 28 MHz	20 MHz	16 MHz	10 MHz	8 MHz
0	42.5	—	2.1	2.6	4.3	5.3
1	82.5	2.9	4.2	5.0	8.3	10.3

Note: The indication "—" means the setting is not available.

13.5 Interrupts

The high speed A/D converter generates an A/D conversion end interrupt (ADI) upon completion of A/D conversions. The ADI interrupt request can be enabled or disabled by the ADIE bit of the ADCSR.

The DMAC can be activated by ADI interrupts. When converted data is read by the DMAC upon an ADI interrupt, consecutive conversions can be done without software responsibility.

Table 13.9 lists the high speed A/D converter interrupt sources.

During scan mode, if the ADIE bit is set to 1, A/D conversion is temporarily suspended immediately when the ADF flag is set to 1. A/D conversion is restarted when the ADF flag is cleared to 0.

When the DMAC is activated by an ADI interrupt, the ADF flag is cleared to 0 when the final specified data register is read.

Table 13.9 High Speed A/D Converter Interrupt Sources

Interrupt Source	Description	DMAC Activation
ADI	Interrupt caused by conversion end	Possible

13.6 Usage Notes

Note the following points concerning the high speed A/D converter.

13.6.1 Analog Input Voltage Range

During A/D conversions, see that the voltage applied to the analog input pins AN0 to AN7 is within the range of $AV_{SS} \leq$ AN0 to AN7 $\leq AV_{CC}$.

13.6.2 AV_{CC}, AV_{SS} Input Voltages

The AV_{CC}, AV_{SS} input voltages should be $AV_{CC} = V_{CC} \pm 10\%$, and $AV_{SS} = V_{SS}$. When not using the high speed A/D converter, make $AV_{CC} = V_{CC}$ and $AV_{SS} = V_{SS}$. When in standby mode, make $V_{RAM} \leq AV_{CC} \leq 5.5$ V, and $AV_{SS} = V_{SS}$. V_{RAM} is the RAM standby voltage.

13.6.3 Input Ports

Make the time constant of circuitry connected to an input port shorter than the high speed A/D converter sampling time. If the time constant of the circuit is longer, there will be occasions where the input voltage is not adequately sampled.

13.6.4 Conversion Start Modes

Current consumption will be different for the A/D conversion operation in high speed start mode and low-power conversion mode according to the PWR bit setting.

13.6.5 A/D Conversion Termination (HD6417014R only)

If conversion is terminated while in progress (when ADST = 1) in high-speed start mode (PWR = 1) by clearing the ADST bit, there may be a large degree of error in the first conversion following the restart (on channel 1 in normal mode, or channel 2 in simultaneous sampling mode). Subsequent conversions will be performed normally

If A/D conversion is terminated while in progress, use one of the following methods to solve this problem:

(a) Ignore the first data following a restart after termination.

(b) If the first data after a restart is used, perform a single dummy conversion in single mode after the termination, terminate A/D conversion, then restart.

(c) After termination, write 0 to the PWR bit before restarting. (In this case, the first conversion after the restart will begin after the elapse of 200 A/D reference clock cycles.)

13.6.6 Handling of Analog Input Pins

To prevent damage from surges and other abnormal voltages at the analog input pins (AN0 to AN7), connect a protection circuit such as that shown in figure 13.12. This circuit also includes a CR filter function that suppresses error due to noise. The circuit shown here is only a design example; circuit constants must be decided on the basis of the actual operating conditions.

Figure 13.13 shows an equivalent circuit for the analog input pins, and table 13.10 summarizes the analog input pin specifications.

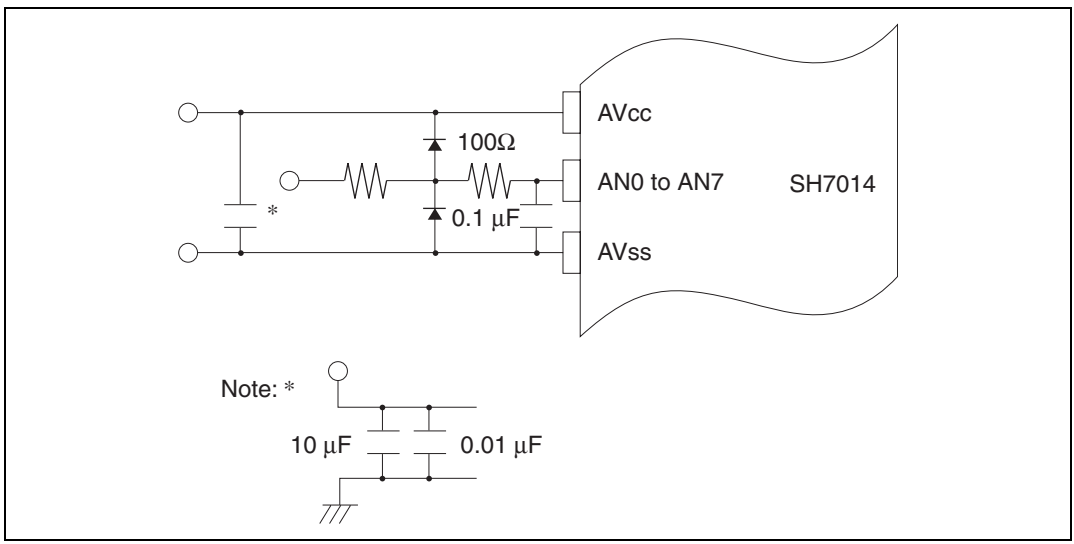

Figure 13.12 Example of Analog Input Pin Protection Circuit

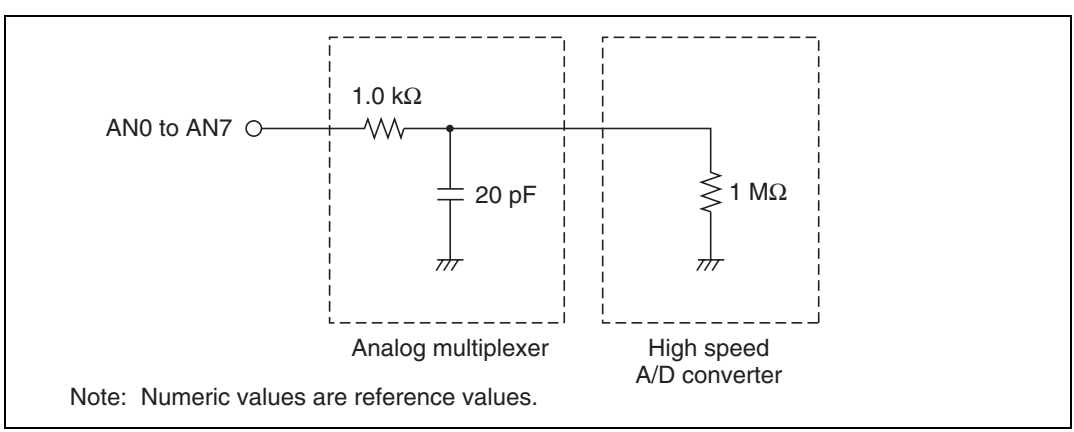

Figure 13.13 Analog Input Pin Equivalent Circuit

Table 13.10 Analog Input Pin Specifications

Item	Min	Max	Unit
Analog input capacitance	—	20	pF
Permissible signal source impedance	—	1	kΩ

Section 14 Mid-Speed A/D Converter — SH7016, SH7017 —

14.1 Overview

The mid-speed A/D converter has 10 bit resolution, and can select from a maximum of eight channels of analog input.

14.1.1 Features

The mid-speed A/D converter has the following features:

- 10-bit resolution
- Eight input channels
- Conversion time
  - Minimum conversion time: per channel: 6.7 μs (20MHz)
- Multiple conversion modes: Single mode/scan mode
  - Single mode: 1 channel A/D conversion
  - 1 to 4 channel simultaneous conversion
- Four 16-bit data registers
  - The results of A/D conversion are transferred to and held in the data register for the relevant channel.
- Sample and hold function
- A/D conversion end interrupt generation
  - An A/D conversion end interrupt (ADI) can be generated on completion of A/D conversion.
- A/D conversion can be started by MTU trigger input.

14.1.2 Block Diagram

Figure 14.1 is the block diagram of the mid-speed A/D converter.

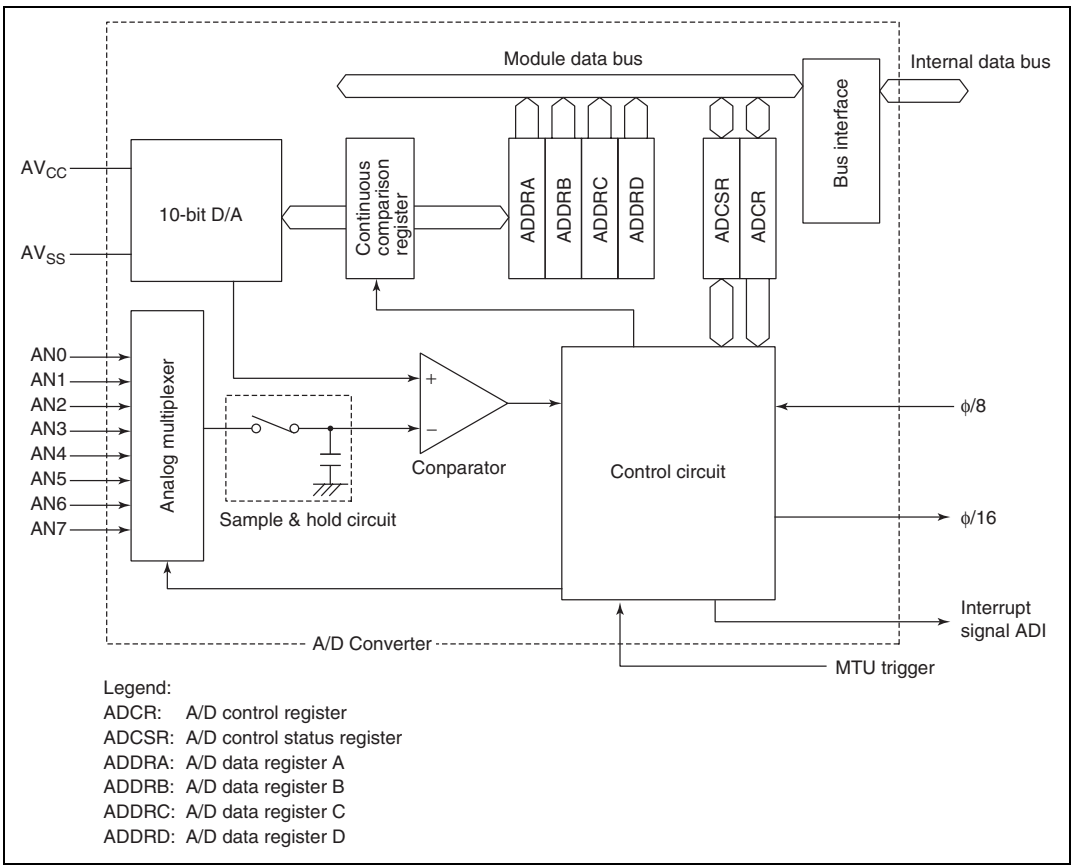

Figure 14.1 Mid-speed A/D converter block diagram

14.1.3 Pin Configuration

Table 14.1 shows the input pins used with the mid-speed A/D converter.

The eight analog input pins are divided into two groups, with analog input pins 0 to 3 (AN0 to AN3) comprising group 0, and analog input pins 4 to 7 (AN4 to AN7) comprising group 1.

The AV_{CC} and AV_{SS} pins are for the mid-speed A/D converter internal analog section power supply.

Table 14.1 Pin Configuration

Pin	Abbreviation	I/O	Function
Analog supply	AV_{CC}	I	Analog section power supply
Analog ground	AV_{SS}	I	Analog section ground and A/D conversion standard voltage
Analog input 0	AN0	I	Analog input group 0
Analog input 1	AN1	I	
Analog input 2	AN2	I	
Analog input 3	AN3	I	
Analog input 4	AN4	I	Analog input group 1
Analog input 5	AN5	I	
Analog input 6	AN6	I	
Analog input 7	AN7	I	

14.1.4 Register Configuration

Table 14.2 shows the register configuration of the mid-speed A/D converter.

Table 14.2 Register Configuration

Name	Abbreviation	R/W	Initial Value	Address	Access Size
A/D data register AH	ADDRAH	R	H'00	H'FFFF8420	8, 16
A/D data register AL	ADDRAL	R	H'00	H'FFFF8421	8
A/D data register BH	ADDRBH	R	H'00	H'FFFF8422	8, 16
A/D data register BL	ADDRBL	R	H'00	H'FFFF8423	8
A/D data register CH	ADDRCH	R	H'00	H'FFFF8424	8, 16
A/D data register CL	ADDRCL	R	H'00	H'FFFF8425	8
A/D data register DH	ADDRDH	R	H'00	H'FFFF8426	8, 16
A/D data register DL	ADDRDL	R	H'00	H'FFFF8427	8
A/D control/status register	ADCSR	R/(W)*	H'00	H'FFFF8428	8, 16
A/D control register	ADCR	R/W	H'7F	H'FFFF8429	8, 16

Note: * Only 0 can be written to bit 7 to clear the flag.

14.2 Register Descriptions

14.2.1 A/D Data Register A to D (ADDRA to ADDRD)

Bit :	15	14	13	12	11	10	9	8	7	6	5	4	3	2	1	0
ADDRn :	AD9	AD8	AD7	AD6	AD5	AD4	AD3	AD2	AD1	AD0	—	—	—	—	—	—
Initial value :	0	0	0	0	0	0	0	0	0	0	0	0	0	0	0	0
R/W :	R	R	R	R	R	R	R	R	R	R	R	R	R	R	R	R

Note: n = A to D

A/D registers are special registers that read stored results of A/D conversion in 16 bits. There are four registers: ADDRA to ADDRD.

The A/D converted data is 10 bit data which is to the ADDR of the corresponding converted channel for storage. The upper 8 bits of the A/D converted data correspond to the upper byte of the ADDR and the lower 2 bits correspond to the lower byte. Bits 5 to 0 of the lower byte of ADDR are reserved and always read 0. Analog input channels and correspondence to ADDR are shown in table 14.3.

ADDR can always be read from the CPU. The upper byte may be read directly. The lower byte is transferred through the temporary register (TEMP). For details, see section 14.3, Interface with CPU.

ADDR is initialized to H'0000 during power-on reset.

Table 14.3 Analog Input Channel and ADDRA to ADDRD Correspondence

Analog Input Channel		
Group	**Group 1**	**A/D Data Register**
AN0	AN4	ADDRA
AN1	AN5	ADDRB
AN2	AN6	ADDRC
AN3	AN7	ADDRD

14.2.2 A/D Control/Status Register (ADCSR)

Bit :	7	6	5	4	3	2	1	0
	ADF	ADIE	ADST	SCAN	CKS	CH2	CH1	CH0
Initial value :	0	0	0	0	0	0	1	0
R/W :	R/(W)*	R/W	R/W	R/W	R/W	R/W	R/W	R/W

Note: * Only 0 can be written to clear the flag.

The A/D control/status register (ADCSR) is register that can read/write in 8 bits and control mid-speed A/D converter operations such as mode selection.

The ADCSR is initialized to H'00 during power-on reset.

Bit 7—A/D End Flag (ADF): Status flag that indicates end of A/D conversion.

Bit 7 ADF	Description	
0	[Clear conditions] 1. Writing 0 to ADF after reading ADF with ADF = 1 2. When registers of the mid-speed converter are accessed after the DMAC is activated by ADI interrupt.	(Initial value)
1	[Set conditions] 1. Single mode: When A/D conversion is complete 2. Scan mode: When A/D conversion of all designated channels are complete	

Bit 6—A/D Interrupt Enable (ADIE): Enables or disables interrupt request (ADI) due to completion of A/D conversion.

Bit 6 ADIE	Description	
0	Disables interrupt request (ADI) due to completion of A/D conversion	(Initial value)
1	Enables interrupt request (ADI) due to completion of A/D conversion	

Bit 5—A/D Start (ADST): Selects start/end of A/D conversion. A 1 is maintained during A/D conversion start. It is also possible to set a 1 by the MTU trigger input.

Bit 5 ADST	Description	
0	A/D conversion halted	(Initial value)
1	1. Single mode: Starts A/D conversion. Automatically clears to 0 when conversion of the designated channel is complete 2. Scan mode: Starts A/D conversion. Continuous conversion until cleared to 0 by the software	

Bit 4—Scan Mode (SCAN): Selects the A/D conversion mode from single mode and scan mode. For operations during single/scan mode, see section 14.4, Operation. When switching modes, proceed while ADST = 0.

Bit 4 SCAN	Description	
0	Single mode	(Initial value)
1	Scan mode	

Bit 3—Clock Select (CKS): Sets the A/D conversion time. Proceed conversion time switch while ADST = 0. Always set CKS = 0 when operating frequency exceeds 20MHz.

Bit 3 CKS	Description	
0	Conversion time = 266 states (max)	(Initial value)
1	Conversion time = 134 states (max)	

Bits 2 to 0—Channel select 2 to 0 (CH2 to CH0): Selects the analog input channel along with the SCAN bit. Switch channels while ADST = 0.

Group Selection	Channel Selection		Description	
CH2	**CH1**	**CH0**	**Single Mode**	**Scan Mode**
0	0	0	AN0 (Initial value)	AN0 (Initial value)
		1	AN1	AN0, AN1
	1	0	AN2	AN0 to AN2
		1	AN3	AN0 to AN3
1	0	0	AN4	AN4
		1	AN5	AN4, AN5
	1	0	AN6	AN4 to AN6
		1	AN7	AN4 to AN7

14.2.3 A/D Control Register (ADCR)

Bit :	7	6	5	4	3	2	1	0
Initial value :	TRGE	—	—	—	—	—	—	—
	0	1	1	1	1	1	1	1
R/W :	R/W	R	R	R	R	R	R	R

A/D control register (ADCR) is register that can read/write in 8 bits and enables or disables A/D conversion start of the MTU trigger input.

ADCR is initialized to H'7F during power-on reset.

Bit 7—Trigger Enable (TRGE): Enables or disables A/D conversion start of input from MTU trigger.

Bit 7 TRGE	Description	
0	Disables A/D conversion start of MTU trigger	(Initial value)
1	Starts A/D conversion on MTU trigger.	

Bits 6 to 0—Reserved bits: These bits always read as 1. The write value should always be 1.

14.3 Interface with CPU

Although A/D data register ADDRA to ADDRD are 16-bit registers, the bus width within the chip that integrates with the CPU is 8-bits. So, the lower byte data is read through the temporary register (TEMP). The upper byte data can be read directly.

The procedure for reading data from ADDR is as follows: First, read the upper byte data from ADDR. At this time, the upper byte data is read directly into the CPU and the lower byte data is transferred to TEMP of the mid-speed A/D converter. Next, read the lower byte to read the TEMP contents into the CPU.

When reading the ADDR in byte size, read the upper byte before the lower byte. Furthermore, it is possible to read only the upper byte, however, please note that contents are not guaranteed when reading only the lower byte. In this case, ADDR can be read from the upper-byte address with a word transfer instruction (such as MOV.W).

Figure 14.2 shows the data flow when reading from ADDR.

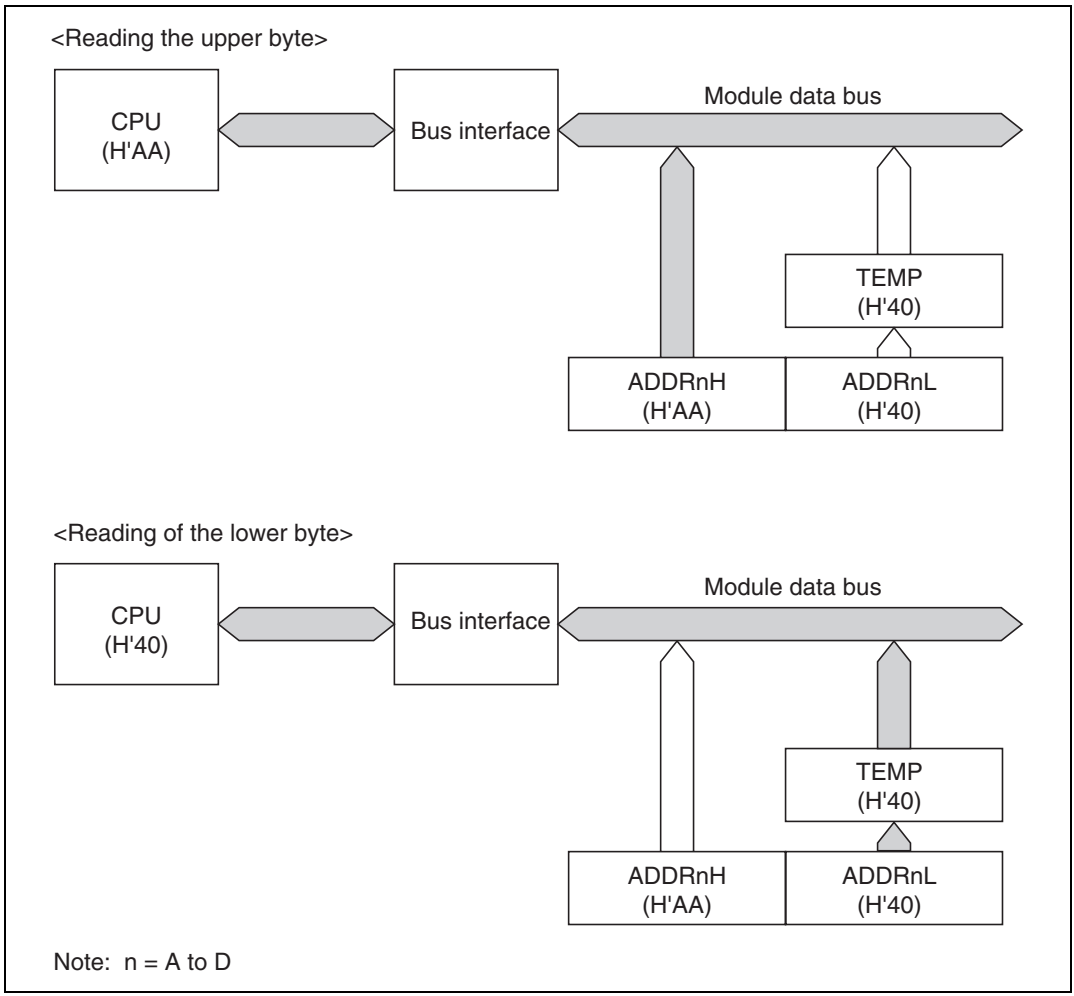

Figure 14.2 ADDR Access Operation (During Reading of (H'AA40))

14.4 Operation

The mid-speed converter operates using the continuous comparison method and is equipped with 10-bit resolution. Operations for the single and scan modes are explained below.

14.4.1 Single Mode (SCAN = 0)

The single mode is selected when executing A/D conversion for one channel only. A/D conversion is initiated when the ADST bit of the A/D control/status register is set to 1 by the software or external trigger input. The ADST bit is held to 1 during the A/D conversion and is automatically cleared to 0 upon completion.

When conversion is complete, the ADF bit of ADCSR is set to 1. At this time, if the ADIE bit of ADCSR is 1, ADI interrupt request occurs.

The ADF bit can be cleared by writing 0 after reading ADF = 1.

To switch modes or analog input channels during A/D conversion, clear the ADST bit to 0 and stop A/D conversion to avoid malfunction. After switching (mode/channel change and ADST bit setting can be made at the same time), set the ADST bit to 1 to restart A/D conversion.

An example of operation when channel 1 (AN1) is selected in the single mode is shown in figure 14.3.

1. Set operation mode to single mode (SCAN = 0), input channel to AN1 (CH2 = CH1 = 0, CH0 = 1) and A/D interrupt request to enable (ADIE = 1) then start A/D conversion (ADST = 1).
2. When A/D conversion is complete, A/D conversion result is transferred to ADDRB. At the same time, ADF = 1 will become ADF = 0 and the mid-speed converter will standby for conversion.
3. Since ADF = 1 and ADIE = 1, ADI interrupt request will occur.
4. The A/D interrupt process routine will start.
5. After reading ADF = 1, write 0 to ADF.
6. Read the A/D conversion result (ADDRB) and process.
7. End A/D interrupt process routine execution. When ADST bit is set to 1, A/D conversion starts, following steps (2) to (7) above.

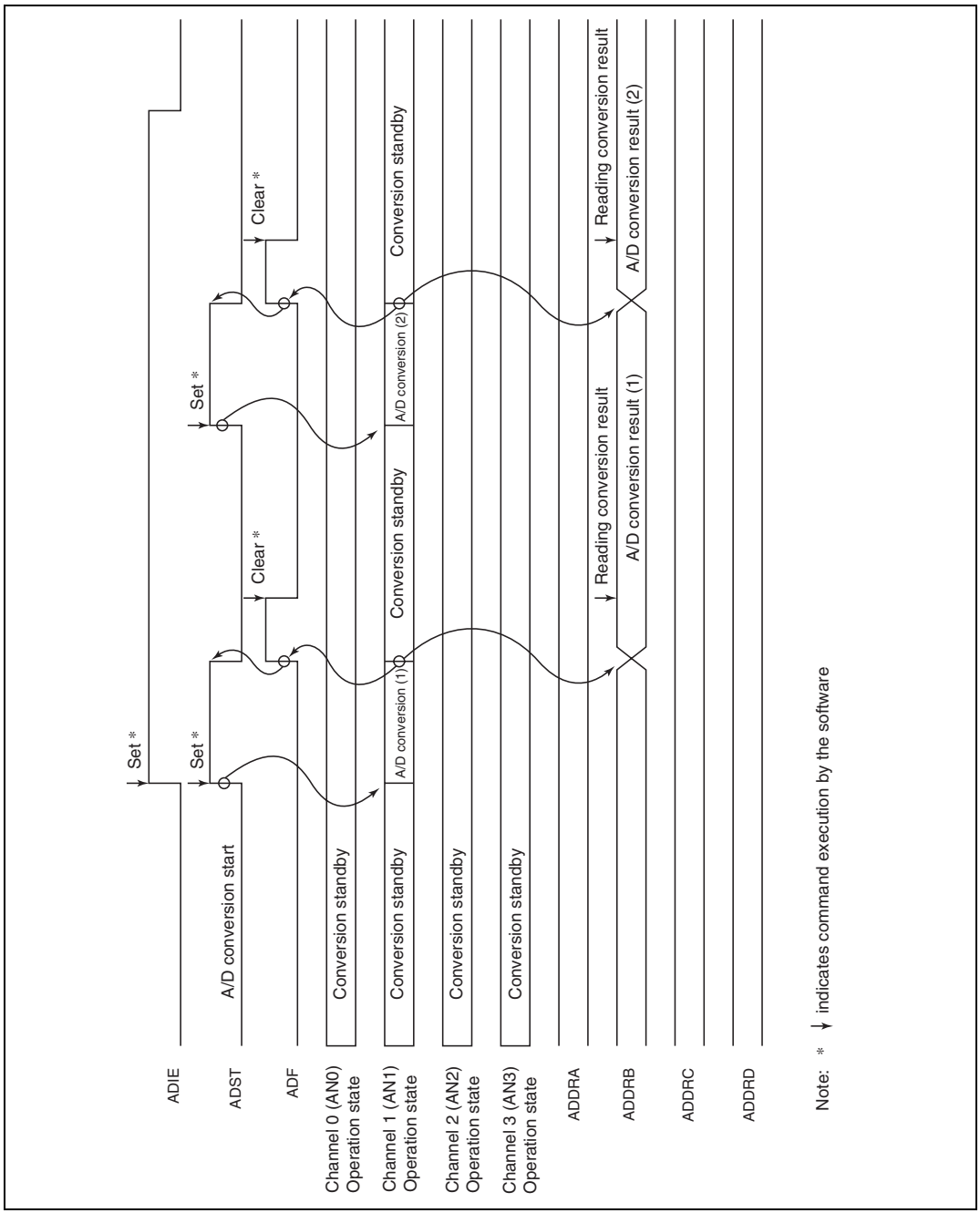

Figure 14.3 Operation Example of Mid-speed A/D Converter (Single Mode, Channel 1 Selected)

14.4.2 Scan Mode (SCAN = 1)

The scan mode is optimal for monitoring analog input of multiple channels (including channel 1). A/D conversion is started from channel 1 (AN0 for CH2 = 0 and AN4 for CH1 = 1) of the group when the ADST bit of the A/D control/status register (ADCSR) is set to 1 by the software or external trigger input.

When multiple channels are selected, A/D conversion of channel 2 (AN1 or AN5) is initiated immediately after completion of the channel 1 conversion.

A/D conversion is performed repeatedly on the selected channels until the ADST bit is cleared to 0. The results of conversion are transferred to and held in the ADDR registers for the relevant channels.

To switch modes or analog input channels during A/D conversion, clear the ADST bit to 0 and stop A/D conversion to avoid malfunction. After switching (mode/channel change and ADST bit setting can be made at the same time), set ADST bit to 1 to restart A/D conversion from channel 1.

An example of operation in scan mode when three channels of group 0 (AN0 to AN2) are selected for A/D conversion is shown in figure 14.4.

1. Set the operation mode to scan mode (SCAN = 1), set the scan group to group 0 (CH2 = 0), set the analog channels to AN0 to AN2 (CH1 = 1, CH0 = 0), and then start A/D conversion (ADST = 1).
2. When A/D conversion for channel 1 (AN0) is complete, A/D conversion result is transferred to ADDRA.

   Next, channel 2 (AN1) will automatically be selected and conversion will begin.
3. In the same manner, channel 3 (AN2) will be converted.
4. When conversion of all of the selected channels (AN0 to AN2) are complete, ADF will become 1 and channel 1 (AN0) will again be selected and conversion will begin.

   At this time, if the ADIE bit is set to 1, ADI interrupt request will occur after completing A/D conversion.
5. Steps (2) to (4) will be repeated while ADST bit is set to 1.

   A/D conversion will stop when setting the ADST bit to 0. When setting the ADST bit to 1, A/D conversion will start again from channel 1 (AN0).

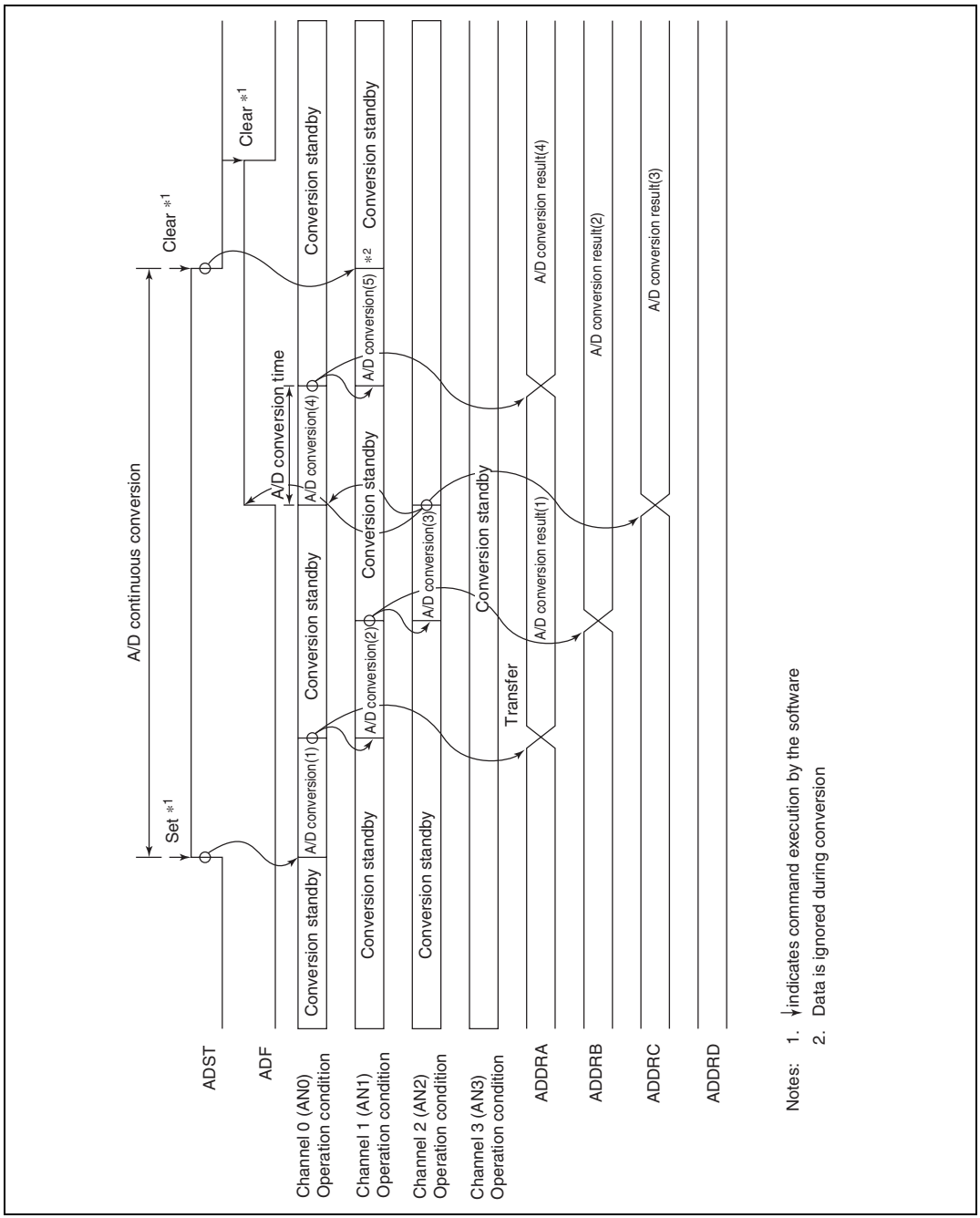

Figure 14.4 Operation Example of Mid-speed A/D Converter (Scan Mode, Three Channels Selected) (AN0 to AN2)

14.4.3 Input Sampling and A/D Conversion Time

The mid-speed A/D converter is equipped with a sample and hold circuit. The mid-speed A/D converter samples input after t_D hours has elapsed since setting the ADST bit of the A/D control/status register (ADCSR) to 1, then begins conversion. The A/D conversion timing is shown in table 14.4.

The A/D conversion time, as shown in figure 14.5, includes both t_D and input sampling time. Here, t_D is determined by the write timing to ADCSR and is not constant. Thus the conversion time changes in the range shown in table 14.4.

The conversion time shown in table 14.4 is the time for the first conversion. For the second conversion and after, the time will be 256 state (fixed) for CKS = 0 and 128 state (fixed) for CKS = 1.

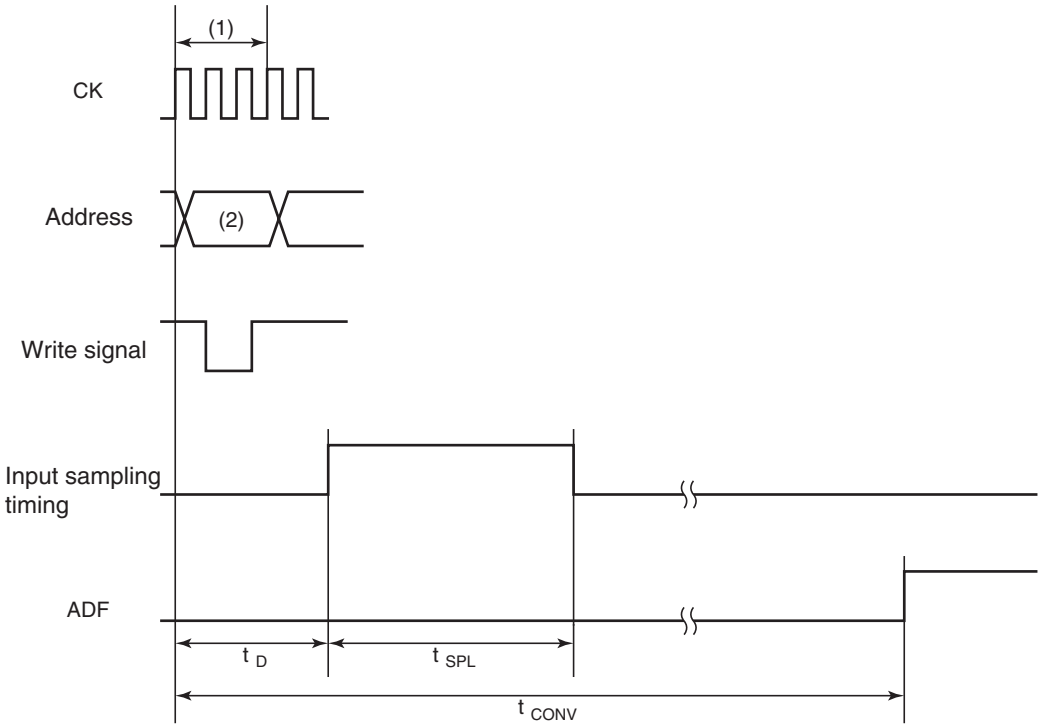

Legend:
(1): Write cycle of ADCSR
(2): Address of ADCSR
t_D: A/D conversion start delay time
t_{SPL}: Input sampling time
t_{CONV}: A/D conversion time

Figure 14.5 A/D Conversion Timing

Table 14.4 A/D Conversion Time (Single Mode)

		CKS = 0			CKS = 1		
	Notation	Min	Typ	Max	Min	Typ	Max
A/D conversion start delay time	t_D	10	—	17	6	—	9
Input sampling time	t_{SPL}	—	64	—	—	32	—
A/D conversion time	t_{CCNV}	259	—	266	131	—	134

Note: Numbers in the table are in states (t_{cyc}).

14.4.4 MTU Trigger Input Timing

It is possible to start A/D conversion from an MTU trigger input. MTU trigger input is input from MTU when the TRGE bit of the A/D control register (ADCR) is set to 1.

A/D conversion is started when the ADST bit of the A/D control/status register (ADCSR) is set to 1 by MTU trigger. Other operations, regardless of whether in the single or scan mode, are the same as when setting the ADST bit to 1 with the software.

Figure 14.6 shows an example of external trigger input timing.

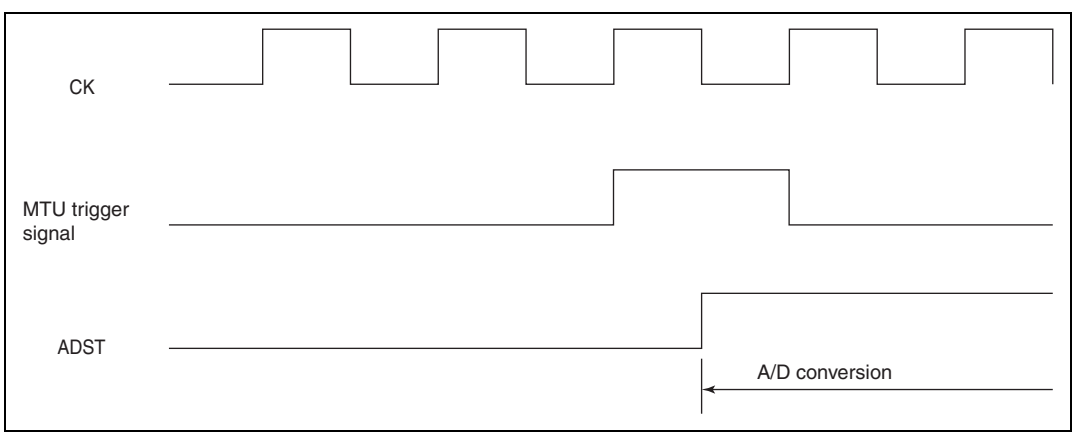

Figure 14.6 External Trigger Input Timing

14.5 Interrupt

The mid-speed A/D converter generates an A/D conversion end interrupt (ADI) on completion of A/D conversion. ADI interrupt requests can be enabled or disabled by means of the ADIE bit in ADCSR.

The DMAC can be activated by an ADI interrupt. Having converted data read by the DMAC by means of ADI interrupts allows continuous conversion to be carried out without imposing a load on the software.

The mid-speed A/D converter's interrupt source is summarized in table 14.5.

When the DMAC are activated by an ADI interrupt, the ADF flag of ADCSR is cleared to 0 by register access of A/D.

Table 14.5 Mid-speed A/D converter interrupt factors

Interrupt Factor	Content	DMAC
ADI	Interrupt by conversion complete	Activation enabled

14.6 A/D Conversion Precision Definitions

The mid-speed A/D converter converts analog values input from analog input channels to 10-bit digital values by comparing them with an analog reference voltage. In this operation, the absolute precision of the A/D conversion (i.e. the deviation between the input analog value and the output digital value) includes the following kinds of error.

(1) Offset error

(2) Full-scale error

(3) Quantization error

(4) Nonlinearity error

The above four kinds of error are described below with reference to figure 14.7. For the sake of clarity, this figure shows 3-bit mid-speed A/D conversion rather than 10-bit mid-speed A/D conversion. Offset error (see figure 14.7 (1)) is the deviation between the actual A/D conversion characteristic and the ideal A/D conversion characteristic when the digital output value changes from the minimum value (zero voltage) of 0000000000 (000 in the figure) to 0000000001 (001 in the figure). Full-scale error (see figure 14.7 (2)) is the deviation between the actual A/D conversion characteristic and the ideal A/D conversion characteristic when the digital output value changes from 1111111110 (110 in the figure) to the maximum value (full-scale voltage) of 111111111 (111 in the figure). Quantization error is the deviation inherent in the mid-speed A/D converter, given by 1/2 LSB (see figure 14.7 (3)). Nonlinearity error is the deviation between the actual A/D conversion characteristic and the ideal A/D conversion characteristic from zero voltage to full-scale voltage (see figure 14.7 (4)). This does not include offset error, full-scale error, and quantization error.

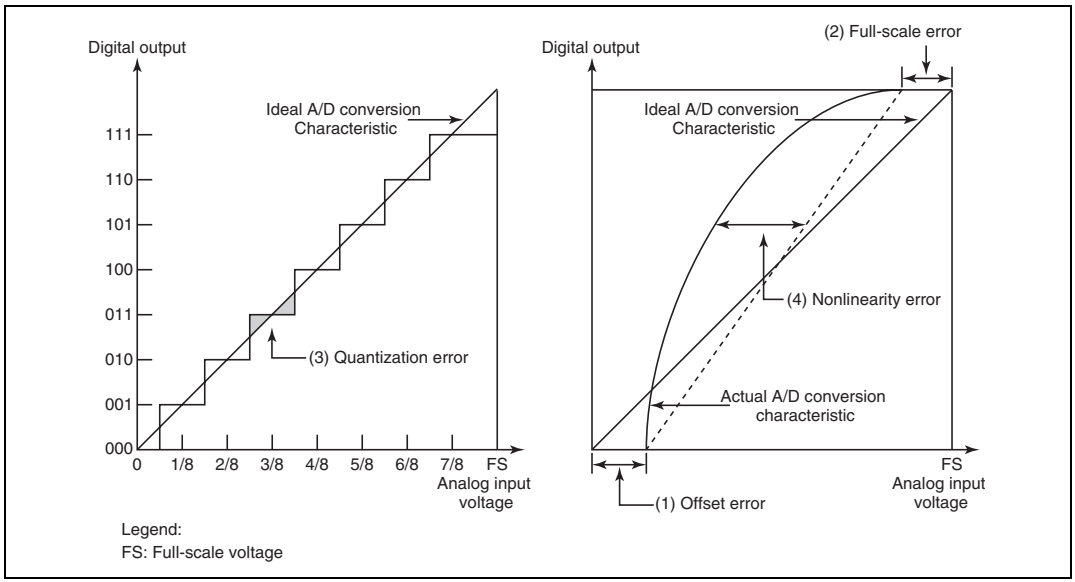

Figure 14.7 A/D Conversion Precision Definitions

14.7 Usage Notes

The following points should be noted when using the mid-speed A/D converter.

14.7.1 Analog Voltage Settings

(1) Analog input voltage range

The voltage applied to analog input pins during A/D conversion should be in the range $AV_{SS} \leq ANn \leq AV_{CC}$ (n = 0 to 7).

(2) AV_{CC} and AV_{SS} input voltages

For the AV_{CC} and AV_{SS} input voltages, set $AV_{CC} = V_{CC} = 5V \pm 10\%$ and $AV_{SS} = V_{SS}$. When the mid-speed A/D converter is not used, set $AV_{CC} = V_{CC}$ and $AV_{SS} = V_{SS}$.

14.7.2 Handling of Analog Input Pins

To prevent damage from surges and other abnormal voltages at the analog input pins (AN0 to AN7), connect a protection circuit such as that shown in figure 14.8. This circuit also includes a CR filter function that suppresses error due to noise. The circuit shown here is only a design example; circuit constants must be decided on the basis of the actual operating conditions.

Figure 14.9 shows an equivalent circuit for the analog input pins, and table 14.6 summarizes the analog input pin specifications.

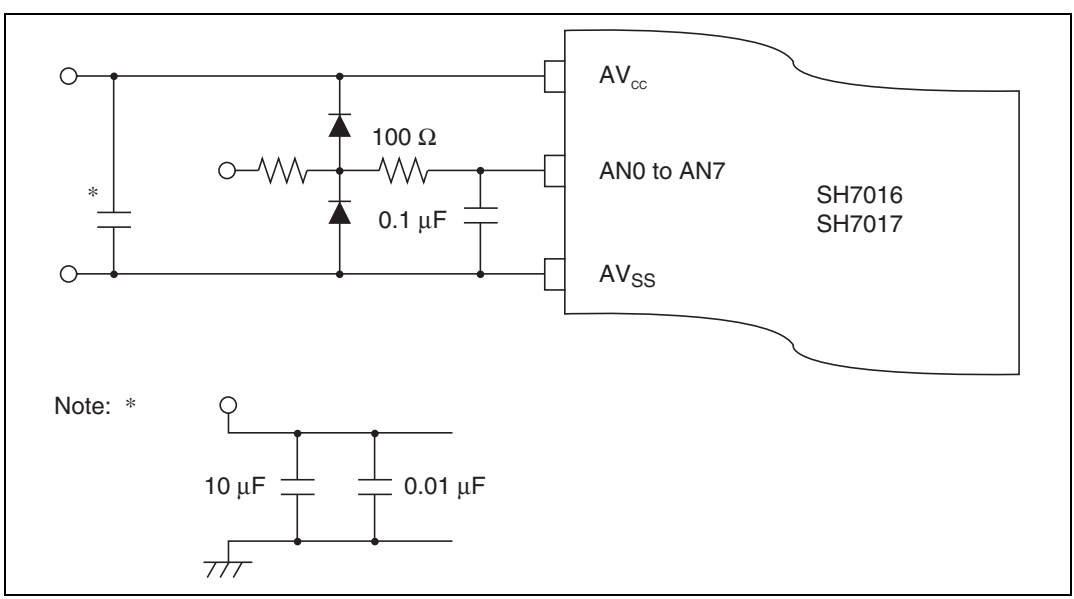

Figure 14.8 Example of Analog Input Pin Protection Circuit

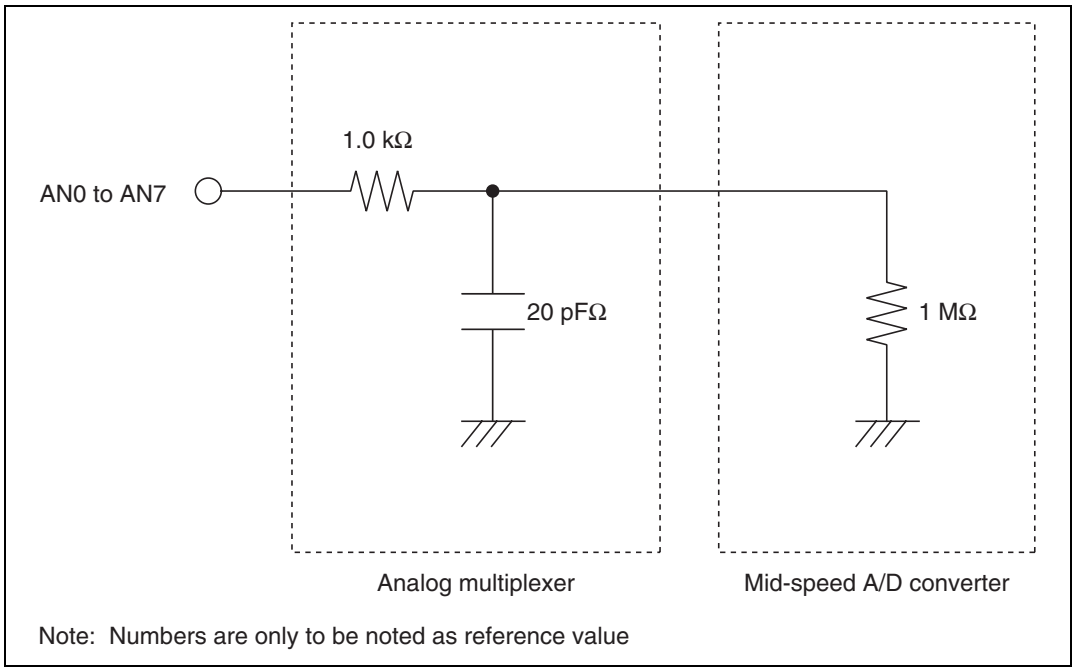

Figure 14.9 Equivalent Circuit for the Analog Input Pins

Table 14.6 Analog Pin Specifications

Item	Min	Max	Unit
Analog input capacitance	—	20	pF
Permissible signal source impedance	—	1	kΩ

Section 15 Compare Match Timer (CMT)

15.1 Overview

This LSI has an on-chip compare match timer (CMT) configured of 16-bit timers for two channels. The CMT has 16-bit counters and can generate interrupts at set intervals.

15.1.1 Features

The CMT has the following features:

- Four types of counter input clock can be selected
  - — One of four internal clocks (ϕ/8, ϕ/32, ϕ/128, ϕ/512) can be selected independently for each channel.
- Interrupt sources
  - — A compare match interrupt can be requested independently for each channel.

15.1.2 Block Diagram

Figure 15.1 shows a block diagram of the CMT.

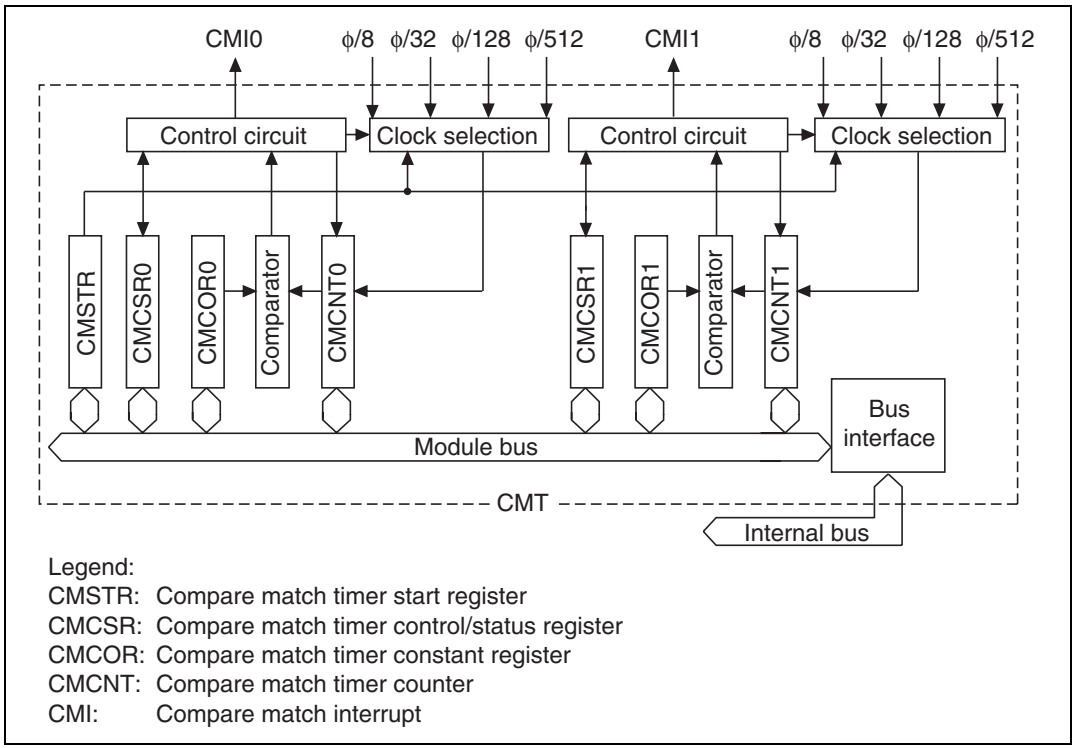

Figure 15.1 CMT Block Diagram

15.1.3 Register Configuration

Table 15.1 summarizes the CMT register configuration.

Table 15.1 Register Configuration

Channel	Name	Abbreviation	R/W	Initial Value	Address	Access Size (Bits)
Shared	Compare match timer start register	CMSTR	R/W	H'0000	H'FFFF83D0	8, 16, 32
0	Compare match timer control/status register 0	CMCSR0	R/(W)*	H'0000	H'FFFF83D2	8, 16, 32
	Compare match timer counter 0	CMCNT0	R/W	H'0000	H'FFFF83D4	8, 16, 32
	Compare match timer constant register 0	CMCOR0	R/W	H'FFFF	H'FFFF83D6	8, 16, 32
1	Compare match timer control/status register 1	CMCSR1	R/(W)*	H'0000	H'FFFF83D8	8, 16, 32
	Compare match timer counter 1	CMCNT1	R/W	H'0000	H'FFFF83DA	8, 16, 32
	Compare match timer constant register 1	CMCOR1	R/W	H'FFFF	H'FFFF83DC	8, 16, 32

Note: * The only value that can be written to the CMCSR0 and CMCSR1 CMF bits is a 0 to clear the flags.

15.2 Register Descriptions

15.2.1 Compare Match Timer Start Register (CMSTR)

The compare match timer start register (CMSTR) is a 16-bit register that selects whether to operate or halt the channel 0 and channel 1 counters (CMCNT). It is initialized to H'0000 by power-on resets and by standby mode.

Bit:	15	14	13	12	11	10	9	8
	—	—	—	—	—	—	—	—
Initial value:	0	0	0	0	0	0	0	0
R/W:	R	R	R	R	R	R	R	R

Bit:	7	6	5	4	3	2	1	0
	—	—	—	—	—	—	STR1	STR0
Initial value:	0	0	0	0	0	0	0	0
R/W:	R	R	R	R	R	R	R/W	R/W

Bits 15 to 2—Reserved: These bits always read as 0. The write value should always be 0.

Bit 1—Count Start 1 (STR1): Selects whether to operate or halt compare match timer counter 1.

Bit 1 STR1	Description	
0	CMCNT1 count operation halted	(initial value)
1	CMCNT1 count operation	

Bit 0—Count Start 0 (STR0): Selects whether to operate or halt compare match timer counter 0.

Bit 0 STR0	Description	
0	CMCNT0 count operation halted	(initial value)
1	CMCNT0 count operation	

15.2.2 Compare Match Timer Control/Status Register (CMCSR)

The compare match timer control/status register (CMCSR) is a 16-bit register that indicates the occurrence of compare matches, sets the enable/disable of interrupts, and establishes the clock used for incrementation. It is initialized to H'0000 by power-on resets and by standby mode.

Bit:	15	14	13	12	11	10	9	8
	—	—	—	—	—	—	—	—
Initial value:	0	0	0	0	0	0	0	0
R/W:	R	R	R	R	R	R	R	R

Bit:	7	6	5	4	3	2	1	0
	CMF	CMIE	—	—	—	—	CKS1	CKS0
Initial value:	0	0	0	0	0	0	0	0
R/W:	R/(W)*	R/W	R	R	R	R	R/W	R/W

Note: * The only value that can be written is a 0 to clear the flag.

Bits 15 to 8 and 5 to 2—Reserved: These bits always read as 0. The write value should always be 0.

Bit 7—Compare Match Flag (CMF): This flag indicates whether or not the CMCNT and CMCOR values have matched.

Bit 7 CMF	Description	
0	CMCNT and CMCOR values have not matched Clear condition: Write a 0 to CMF after reading a 1 from it	(initial status)
1	CMCNT and CMCOR values have matched	

Bit 6—Compare Match Interrupt Enable (CMIE): Selects whether to enable or disable a compare match interrupt (CMI) when the CMCNT and CMCOR values have matched (CMF = 1).

Bit 6 CMIE	Description	
0	Compare match interrupts (CMI) disabled	(initial status)
1	Compare match interrupts (CMI) enabled	

Bits 1, 0—Clock Select 1, 0 (CKS1, CKS0): These bits select the clock input to the CMCNT from among the four internal clocks obtained by dividing the system clock (ϕ). When the STR bit of the CMSTR is set to 1, the CMCNT begins incrementing with the clock selected by CKS1 and CKS0.

Bit 1 CKS1	Bit 0 CKS0	Description
0	0	ϕ/8 (initial status)
	1	ϕ/32
1	0	ϕ/128
	1	ϕ/512

15.2.3 Compare Match Timer Counter (CMCNT)

The compare match timer counter (CMCNT) is a 16-bit register used as an upcounter for generating interrupt requests.

When an internal clock is selected with the CKS1, CKS0 bits of the CMCSR register and the STR bit of the CMSTR is set to 1, the CMCNT begins incrementing with that clock. When the CMCNT value matches that of the compare match timer constant register (CMCOR), the CMCNT is cleared to H'0000 and the CMF flag of the CMCSR is set to 1. If the CMIE bit of the CMCSR is set to 1 at this time, a compare match interrupt (CMI) is requested.

The CMCNT is initialized to H'0000 by power-on resets and by standby mode.

Bit:	15	14	13	12	11	10	9	8
Initial value:	0	0	0	0	0	0	0	0
R/W:	R/W	R/W	R/W	R/W	R/W	R/W	R/W	R/W

Bit:	7	6	5	4	3	2	1	0
Initial value:	0	0	0	0	0	0	0	0
R/W:	R/W	R/W	R/W	R/W	R/W	R/W	R/W	R/W

15.2.4 Compare Match Timer Constant Register (CMCOR)

The compare match timer constant register (CMCOR) is a 16-bit register that sets the compare match period with the CMCNT.

The CMCOR is initialized to H'FFFF by power-on resets and by standby mode.

Bit:	15	14	13	12	11	10	9	8
Initial value:	1	1	1	1	1	1	1	1
R/W:	R/W	R/W	R/W	R/W	R/W	R/W	R/W	R/W

Bit:	7	6	5	4	3	2	1	0
Initial value:	1	1	1	1	1	1	1	1
R/W:	R/W	R/W	R/W	R/W	R/W	R/W	R/W	R/W

15.3 Operation

15.3.1 Period Count Operation

When an internal clock is selected with the CKS1, CKS0 bits of the CMCSR register and the STR bit of the CMSTR is set to 1, the CMCNT begins incrementing with the selected clock. When the CMCNT counter value matches that of the compare match constant register (CMCOR), the CMCNT counter is cleared to H'0000 and the CMF flag of the CMCSR register is set to 1. If the CMIE bit of the CMCSR register is set to 1 at this time, a compare match interrupt (CMI) is requested. The CMCNT counter begins counting up again from H'0000.

Figure 15.2 shows the compare match counter operation.

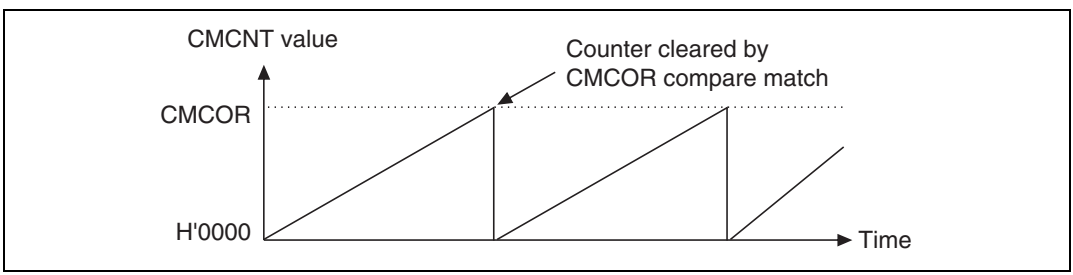

Figure 15.2 Counter Operation

15.3.2 CMCNT Count Timing

One of four clocks (ϕ/8, ϕ/32, ϕ/128, ϕ/512) obtained by dividing the system clock (CK) can be selected by the CKS1, CKS0 bits of the CMCSR. Figure 15.3 shows the timing.

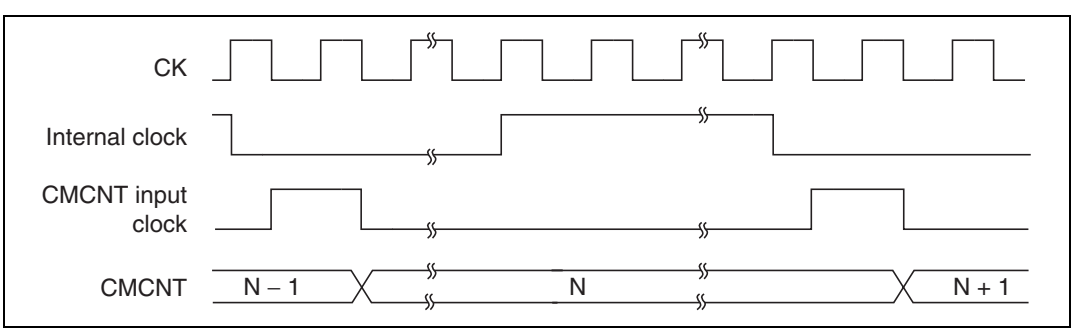

Figure 15.3 Count Timing

15.4 Interrupts

15.4.1 Interrupt Sources

The CMT has a compare match interrupt for each channel, with independent vector addresses allocated to each of them. The corresponding interrupt request is output when the interrupt request flag CMF is set to 1 and the interrupt enable bit CMIE has also been set to 1.

When activating CPU interrupts by interrupt request, the priority between the channels can be changed by using the interrupt controller settings. See section 6, Interrupt Controller, for details.

15.4.2 Compare Match Flag Set Timing

The CMF bit of the CMCSR register is set to 1 by the compare match signal generated when the CMCOR register and the CMCNT counter match. The compare match signal is generated upon the final state of the match (timing at which the CMCNT counter matching count value is updated). Consequently, after the CMCOR register and the CMCNT counter match, a compare match signal will not be generated until a CMCNT counter input clock occurs. Figure 15.4 shows the CMF bit set timing.

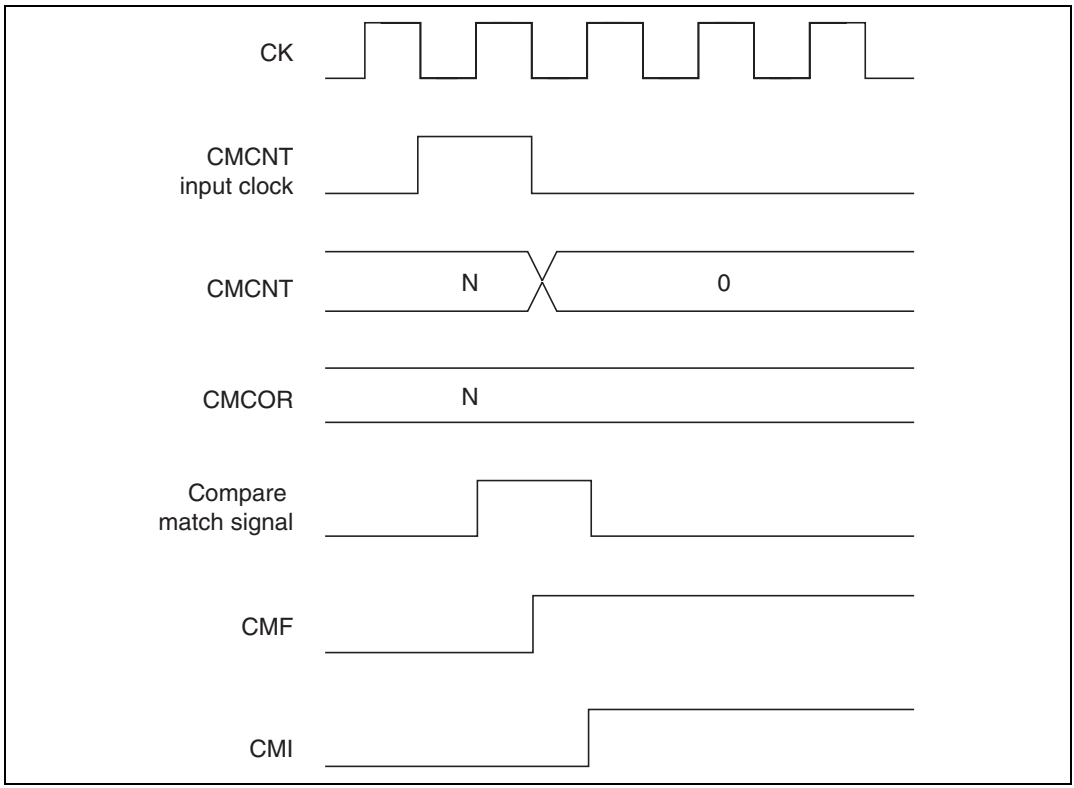

Figure 15.4 CMF Set Timing

15.4.3 Compare Match Flag Clear Timing

The CMF bit of the CMCSR register is cleared either by writing a 0 to it after reading a 1. Figure 15.5 shows the timing when the CMF bit is cleared by the CPU.

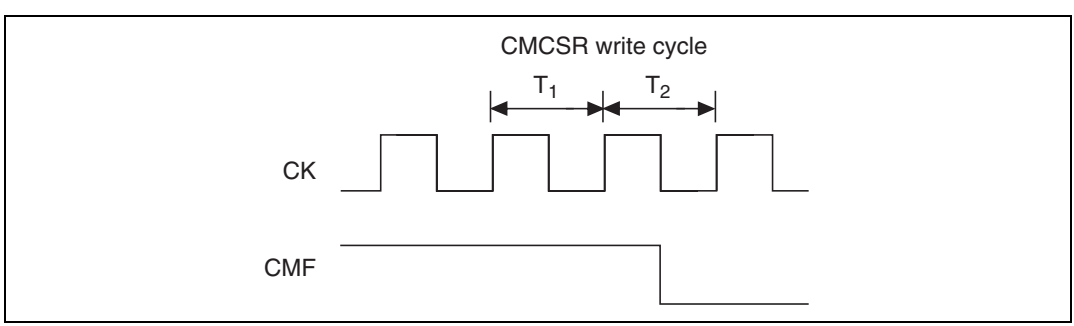

Figure 15.5 Timing of CMF Clear by the CPU

15.5 Usage Notes

Take care that the contentions described in sections 15.5.1 to 15.5.3 do not arise during CMT operation.

15.5.1 Contention between CMCNT Write and Compare Match

If a compare match signal is generated during the T_2 state of the CMCNT counter write cycle, the CMCNT counter clear has priority, so the write to the CMCNT counter is not performed. Figure 15.6 shows the timing.

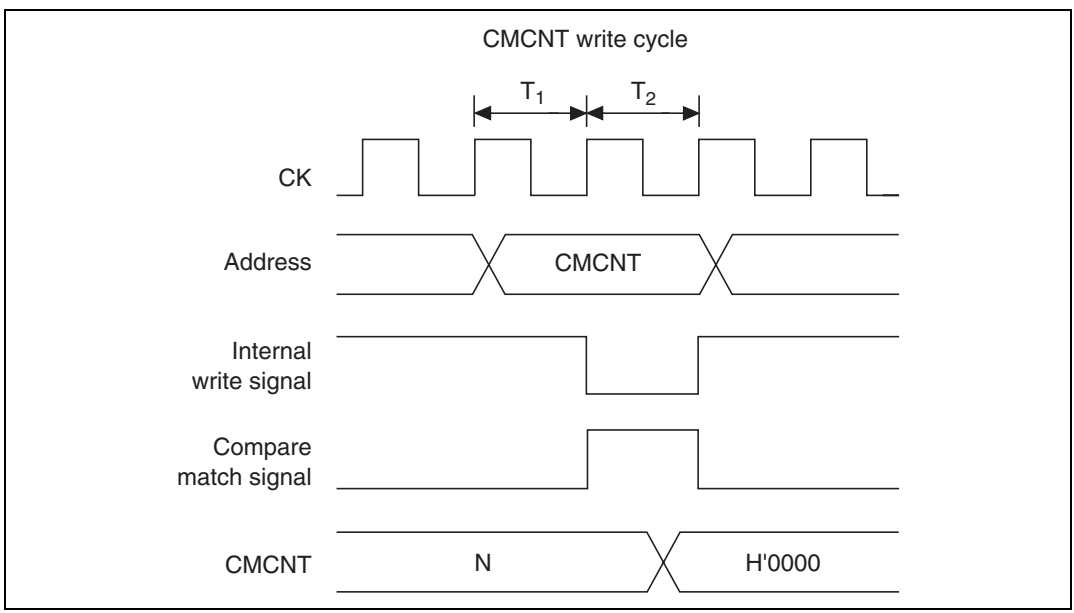

Figure 15.6 CMCNT Write and Compare Match Contention

15.5.2 Contention between CMCNT Word Write and Incrementation

If an increment occurs during the T_2 state of the CMCNT counter word write cycle, the counter write has priority, so no increment occurs. Figure 15.7 shows the timing.

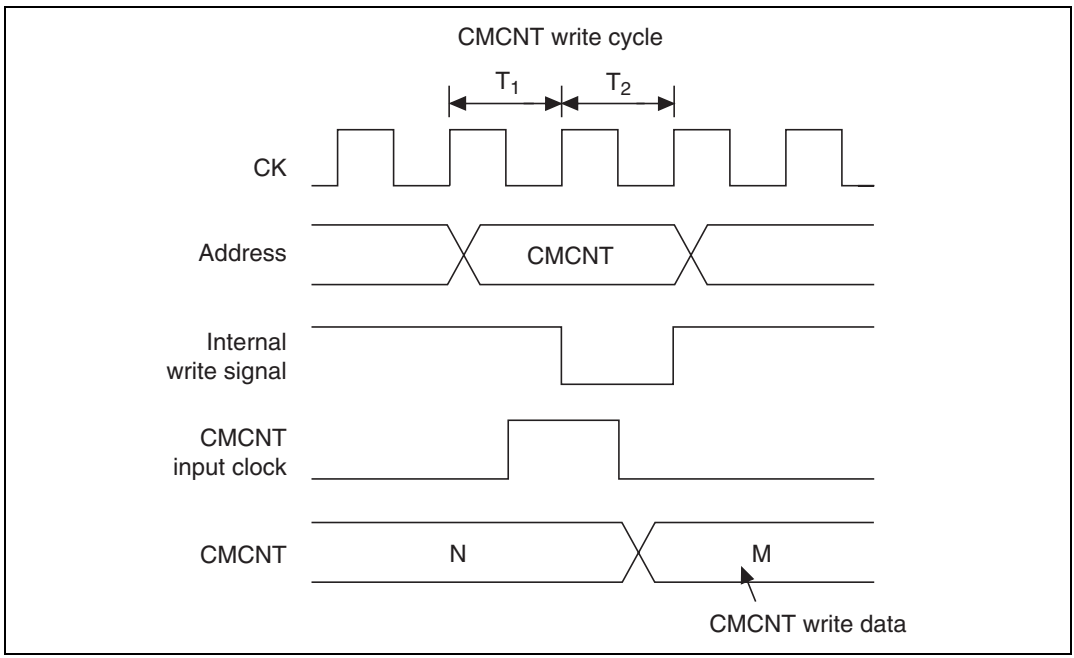

Figure 15.7 CMCNT Word Write and Increment Contention

15.5.3 Contention between CMCNT Byte Write and Incrementation

If an increment occurs during the T_2 state of the CMCNT byte write cycle, the counter write has priority, so no increment of the write data results on the writing side. The byte data on the side not performing the writing is also not incremented, so the contents are those before the write.

Figure 15.8 shows the timing when an increment occurs during the T_2 state of the CMCNTH write cycle.

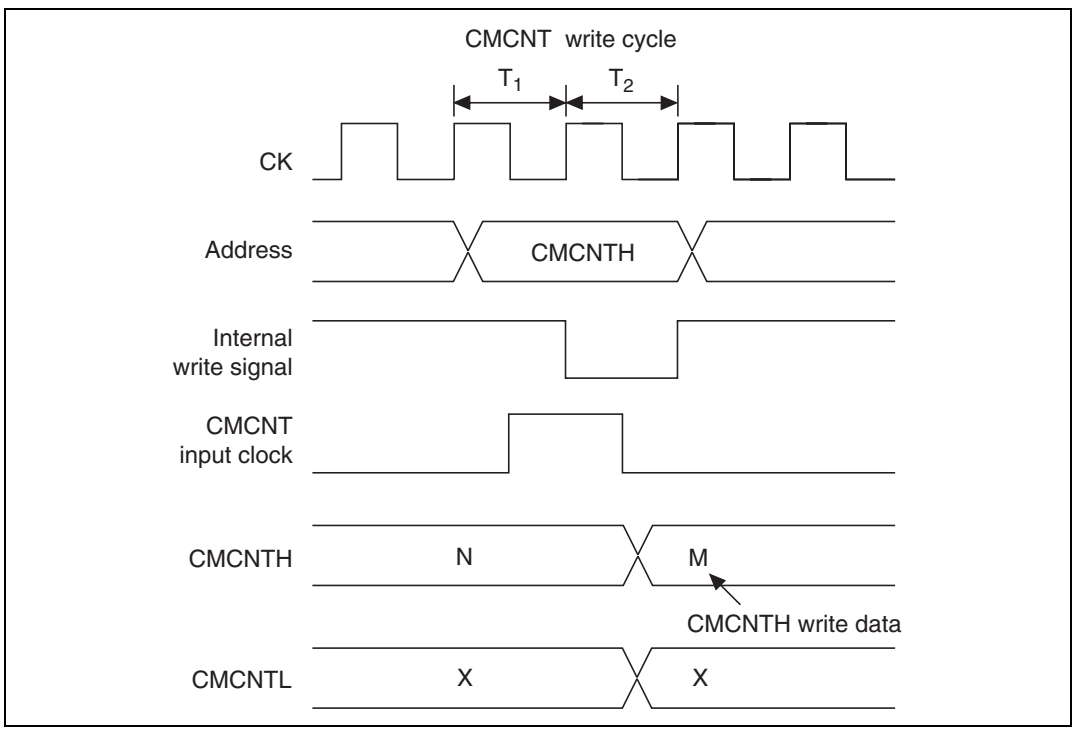

Figure 15.8 CMCNT Byte Write and Increment Contention

Section 16 Pin Function Controller (PFC)

16.1 Overview

The pin function controller (PFC) is composed of registers for selecting the function of multiplexed pins and the direction of input/output. Table 16.1 lists this LSI's multiplexed pins. The multiplex pin functions have restrictions dependent on the operating mode. Table 16.2 lists the pin functions and initial values for each operating mode.

Table 16.1 Multiplexed Pins

Port	Function 1 (Related Module)	Function 2 (Related Module)	Function 3 (Related Module)	Function 4 (Related Module)	Pin No.
A	PA15 I/O (port)	CK output (CPG)	—	—	83
A	PA14 I/O (port)*	$\overline{\text{RD}}$ output (BSC)	—	—	34
A	PA13 I/O (port)*	$\overline{\text{WRH}}$ output (BSC)	—	—	36
A	PA12 I/O (port)*	$\overline{\text{WRL}}$ output (BSC)	—	—	38
A	PA11 I/O (port)*	$\overline{\text{CS1}}$ output (BSC)	—	—	40
A	PA10 I/O (port)*	$\overline{\text{CS0}}$ output (BSC)	—	—	41
A	PA9 I/O (port)	TCLKD input (MTU)	$\overline{\text{IRQ3}}$ (INTC)	—	42
A	PA8 I/O (port)	TCLKC input (MTU)	$\overline{\text{IRQ2}}$ (INTC)	—	43
A	PA7 I/O (port)	TCLKB input (MTU)	$\overline{\text{CS3}}$ output (BSC)	—	44
A	PA6 I/O (port)	TCLKA input (MTU)	$\overline{\text{CS2}}$ output (BSC)	—	45
A	PA5 I/O (port)	SCK1 I/O (SCI)	$\overline{\text{DREQ1}}$ input (DMAC)	$\overline{\text{IRQ1}}$ input (INTC)	46
A	PA4 I/O (port)	TxD1 output (SCI)	—	—	47
A	PA3 I/O (port)	RxD1 input (SCI)	—	—	48
A	PA2 I/O (port)	SCK0 I/O (SCI)	$\overline{\text{DREQ0}}$ input (DMAC)	$\overline{\text{IRQ0}}$ input (INTC)	49
A	PA1 I/O (port)	TxD0 output (SCI)	—	—	50
A	PA0 I/O (port)	RxD0 input (SCI)	—	—	51
B	PB9 I/O (port)	$\overline{\text{IRQ7}}$ input (INTC)	A21 output (BSC)	—	32
B	PB8 I/O (port)	$\overline{\text{IRQ6}}$ input (INTC)	A20 output (BSC)	$\overline{\text{WAIT}}$ input (BSC)	31
B	PB7 I/O (port)	—	A19 output (BSC)	—	30
B	PB6 I/O (port)	—	A18 output (BSC)	—	29
B	PB5 I/O (port)	$\overline{\text{IRQ3}}$ input (INTC)	—	RDWR output (BSC)	28

Port	Function 1 (Related Module)	Function 2 (Related Module)	Function 3 (Related Module)	Function 4 (Related Module)	Pin No.
B	PB4 I/O (port)	$\overline{\text{IRQ2}}$ input (INTC)	—	$\overline{\text{CASH}}$ output (BSC)	26
B	PB3 I/O (port)	$\overline{\text{IRQ1}}$ input (INTC)	—	$\overline{\text{CASL}}$ output (BSC)	25
B	PB2 I/O (port)	$\overline{\text{IRQ0}}$ input (INTC)	—	$\overline{\text{RAS}}$ output (BSC)	24
B	PB1 I/O (port)*	A17 input (BSC)	—	—	22
B	PB0 I/O (port)*	A16 output (BSC)	—	—	20
C	PC15 I/O (port)*	A15 output (BSC)	—	—	19
C	PC14 I/O (port)*	A14 output (BSC)	—	—	18
C	PC13 I/O (port)*	A13 output (BSC)	—	—	17
C	PC12 I/O (port)*	A12 output (BSC)	—	—	16
C	PC11 I/O (port)*	A11 output (BSC)	—	—	15
C	PC10 I/O (port)*	A10 output (BSC)	—	—	14
C	PC9 I/O (port)*	A9 output (BSC)	—	—	13
C	PC8 I/O (port)*	A8 output (BSC)	—	—	12
C	PC7 I/O (port)*	A7 output (BSC)	—	—	11
C	PC6 I/O (port)*	A6 output (BSC)	—	—	10
C	PC5 I/O (port)*	A5 output (BSC)	—	—	9
C	PC4 I/O (port)*	A4 output (BSC)	—	—	8
C	PC3 I/O (port)*	A3 output (BSC)	—	—	7
C	PC2 I/O (port)*	A2 output (BSC)	—	—	6
C	PC1 I/O (port)*	A1 output (BSC)	—	—	5
C	PC0 I/O (port)*	A0 output (BSC)	—	—	4
D	PD15 I/O (port)*	D15 I/O (BSC)	—	—	52
D	PD14 I/O (port)*	D14 I/O (BSC)	—	—	53
D	PD13 I/O (port)*	D13 I/O (BSC)	—	—	54
D	PD12 I/O (port)*	D12 I/O (BSC)	—	—	56
D	PD11 I/O (port)*	D11 I/O (BSC)	—	—	57
D	PD10 I/O (port)*	D10 I/O (BSC)	—	—	58
D	PD9 I/O (port)*	D9 I/O (BSC)	—	—	59
D	PD8 I/O (port)*	D8 I/O (BSC)	—	—	60
D	PD7 I/O (port)*	D7 I/O (BSC)	—	—	62
D	PD6 I/O (port)*	D6 I/O (BSC)	—	—	63

Port	Function 1 (Related Module)	Function 2 (Related Module)	Function 3 (Related Module)	Function 4 (Related Module)	Pin No.
D	PD5 I/O (port)*	D5 I/O (BSC)	—	—	64
D	PD4 I/O (port)*	D4 I/O (BSC)	—	—	66
D	PD3 I/O (port)*	D3 I/O (BSC)	—	—	67
D	PD2 I/O (port)*	D2 I/O (BSC)	—	—	68
D	PD1 I/O (port)*	D1 I/O (BSC)	—	—	69
D	PD0 I/O (port)*	D0 I/O (BSC)	—	—	70
E	PE15 I/O (port)	—	DACK1 output (DMAC)	—	2
E	PE14 I/O (port)	—	DACK0 output (DMAC)	$\overline{\text{AH}}$ output (BSC)	1
E	PE13 I/O (port)	—	—	—	112
E	PE12 I/O (port)	—	—	—	111
E	PE11 I/O (port)	—	—	—	110
E	PE10 I/O (port)	—	—	—	108
E	PE9 I/O (port)	—	—	—	107
E	PE8 I/O (port)	—	—	—	106
E	PE7 I/O (port)	TIOC2B I/O (MTU)	—	—	105
E	PE6 I/O (port)	TIOC2A I/O (MTU)	—	—	104
E	PE5 I/O (port)	TIOC1B I/O (MTU)	—	—	102
E	PE4 I/O (port)	TIOC1A I/O (MTU)	—	—	89
E	PE3 I/O (port)	TIOC0D I/O (MTU)	DRAK1 output (DMAC)	—	88
E	PE2 I/O (port)	TIOC0C I/O (MTU)	$\overline{\text{DREQ1}}$ input (DMAC)	—	87
E	PE1 I/O (port)	TIOC0B I/O (MTU)	DRAK0 output (DMAC)	—	86
E	PE0 I/O (port)	TIOC0A I/O (MTU)	$\overline{\text{DREQ0}}$ input (DMAC)	—	85
F	PF7 input (port)	AN7 input (A/D)	—	—	99
F	PF6 input (port)	AN6 input (A/D)	—	—	98
F	PF5 input (port)	AN5 input (A/D)	—	—	96
F	PF4 input (port)	AN4 input (A/D)	—	—	95
F	PF3 input (port)	AN3 input (A/D)	—	—	94

Port	Function 1 (Related Module)	Function 2 (Related Module)	Function 3 (Related Module)	Function 4 (Related Module)	Pin No.
F	PF2 input (port)	AN2 input (A/D)	—	—	93
F	PF1 input (port)	AN1 input (A/D)	—	—	92
F	PF0 input (port)	AN0 input (A/D)	—	—	91

Note: * SH7016, SH7017 only

Table 16.2 Pin Functions in Each Operating Mode (SH7014)

Pin No.	Pin Name			
	On-Chip ROM Disabled			
	MPU Mode 0		MPU Mode 1	
FP-112	Initial Function	Function Settable by PFC	Initial Function	Function Settable by PFC
21, 37, 65, 103	Vcc	Vcc	Vcc	Vcc
3, 23, 27, 33, 39, 55, 61, 71, 90, 101, 109	Vss	Vss	Vss	Vss
70	D0	D0	D0	D0
69	D1	D1	D1	D1
68	D2	D2	D2	D2
67	D3	D3	D3	D3
66	D4	D4	D4	D4
64	D5	D5	D5	D5
63	D6	D6	D6	D6
62	D7	D7	D7	D7
60	D8	D8	D8	D8
59	D9	D9	D9	D9
58	D10	D10	D10	D10
57	D11	D11	D11	D11
56	D12	D12	D12	D12
54	D13	D13	D13	D13
53	D14	D14	D14	D14
52	D15	D15	D15	D15
4	A0	A0	A0	A0
5	A1	A1	A1	A1
6	A2	A2	A2	A2
7	A3	A3	A3	A3
8	A4	A4	A4	A4
9	A5	A5	A5	A5
10	A6	A6	A6	A6
11	A7	A7	A7	A7

Pin No.	Pin Name			
	On-Chip ROM Disabled			
	MPU Mode 0		MPU Mode 1	
FP-112	Initial Function	Function Settable by PFC	Initial Function	Function Settable by PFC
12	A8	A8	A8	A8
13	A9	A9	A9	A9
14	A10	A10	A10	A10
15	A11	A11	A11	A11
16	A12	A12	A12	A12
17	A13	A13	A13	A13
18	A14	A14	A14	A14
19	A15	A15	A15	A15
20	A16	A16	A16	A16
22	A17	A17	A17	A17
24	PB2	PB2/$\overline{\text{IRQ0}}$/$\overline{\text{RAS}}$	PB2	PB2/$\overline{\text{IRQ0}}$/$\overline{\text{RAS}}$
25	PB3	PB3/$\overline{\text{IRQ1}}$/$\overline{\text{CASL}}$	PB3	PB3/$\overline{\text{IRQ1}}$/$\overline{\text{CASL}}$
26	PB4	PB4/$\overline{\text{IRQ2}}$/$\overline{\text{CASH}}$	PB4	PB4/$\overline{\text{IRQ2}}$/$\overline{\text{CASH}}$
28	PB5	PB5/$\overline{\text{IRQ3}}$/RDWR	PB5	PB5/$\overline{\text{IRQ3}}$/RDWR
29	PB6	PB6/A18	PB6	PB6/A18
30	PB7	PB7/A19	PB7	PB7/A19
31	PB8	PB8/$\overline{\text{IRQ6}}$/A20/$\overline{\text{WAIT}}$	PB8	PB8/$\overline{\text{IRQ6}}$/A20/$\overline{\text{WAIT}}$
32	PB9	PB9/$\overline{\text{IRQ7}}$/A21	PB9	PB9/$\overline{\text{IRQ7}}$/A21
51	PA0	PA0/RXD0	PA0	PA0/RXD0
50	PA1	PA1/TXD0	PA1	PA1/TXD0
49	PA2	PA2/SCK0/$\overline{\text{DREQ0}}$/$\overline{\text{IRQ0}}$	PA2	PA2/SCK0/$\overline{\text{DREQ0}}$/$\overline{\text{IRQ0}}$
48	PA3	PA3/RXD1	PA3	PA3/RXD1
47	PA4	PA4/TXD1	PA4	PA4/TXD1
46	PA5	PA5/SCK1/$\overline{\text{DREQ1}}$/$\overline{\text{IRQ1}}$	PA5	PA5/SCK1/$\overline{\text{DREQ1}}$/$\overline{\text{IRQ1}}$
45	PA6	PA6/TCLKA/$\overline{\text{CS2}}$	PA6	PA6/TCLKA/$\overline{\text{CS2}}$
44	PA7	PA7/TCLKB/$\overline{\text{CS3}}$	PA7	PA7/TCLKB/$\overline{\text{CS3}}$
43	PA8	PA8/TCLKC/$\overline{\text{IRQ2}}$	PA8	PA8/TCLKC/$\overline{\text{IRQ2}}$
42	PA9	PA9/TCLKD/$\overline{\text{IRQ3}}$	PA9	PA9/TCLKD/$\overline{\text{IRQ3}}$
41	$\overline{\text{CS0}}$	$\overline{\text{CS0}}$	$\overline{\text{CS0}}$	$\overline{\text{CS0}}$

Pin No.	Pin Name			
	On-Chip ROM Disabled			
	MPU Mode 0		MPU Mode 1	
FP-112	Initial Function	Function Settable by PFC	Initial Function	Function Settable by PFC
40	$\overline{CS1}$	$\overline{CS1}$	$\overline{CS1}$	$\overline{CS1}$
38	$\overline{WRL}$	$\overline{WRL}$	$\overline{WRL}$	$\overline{WRL}$
36	$\overline{WRH}$	$\overline{WRH}$	$\overline{WRH}$	$\overline{WRH}$
34	$\overline{RD}$	$\overline{RD}$	$\overline{RD}$	$\overline{RD}$
83	CK	PA15/CK	CK	PA15/CK
80	PLLVCC	PLLVCC	PLLVCC	PLLVCC
82	PLLVSS	PLLVSS	PLLVSS	PLLVSS
74	EXTAL	EXTAL	EXTAL	EXTAL
72	XTAL	XTAL	XTAL	XTAL
81	PLLCAP	PLLCAP	PLLCAP	PLLCAP
76	NMI	NMI	NMI	NMI
84	$\overline{RES}$	$\overline{RES}$	$\overline{RES}$	$\overline{RES}$
35	$\overline{WDTOVF}$	$\overline{WDTOVF}$	$\overline{WDTOVF}$	$\overline{WDTOVF}$
79	MD0	MD0	MD0	MD0
78	MD1	MD1	MD1	MD1
75	MD2	MD2	MD2	MD2
73	MD3	MD3	MD3	MD3
77	VCC	VCC	VCC	VCC
100	AVCC	AVCC	AVCC	AVCC
97	AVSS	AVSS	AVSS	AVSS
91	PF0/AN0	PF0/AN0	PF0/AN0	PF0/AN0
92	PF1/AN1	PF1/AN1	PF1/AN1	PF1/AN1
93	PF2/AN2	PF2/AN2	PF2/AN2	PF2/AN2
94	PF3/AN3	PF3/AN3	PF3/AN3	PF3/AN3
95	PF4/AN4	PF4/AN4	PF4/AN4	PF4/AN4
96	PF5/AN5	PF5/AN5	PF5/AN5	PF5/AN5
98	PF6/AN6	PF6/AN6	PF6/AN6	PF6/AN6
99	PF7/AN7	PF7/AN7	PF7/AN7	PF7/AN7
85	PE0	PE0/TIOC0A/$\overline{DREQ0}$	PE0	PE0/TIOC0A/$\overline{DREQ0}$

Pin No.	Pin Name			
	On-Chip ROM Disabled			
	MPU Mode 0		MPU Mode 1	
FP-112	Initial Function	Function Settable by PFC	Initial Function	Function Settable by PFC
86	PE1	PE1/TIOC0B/DRAK0	PE1	PE1/TIOC0B/DRAK0
87	PE2	PE2/TIOC0C/$\overline{\text{DREQ1}}$	PE2	PE2/TIOC0C/$\overline{\text{DREQ1}}$
88	PE3	PE3/TIOC0D/DRAK1	PE3	PE3/TIOC0D/DRAK1
89	PE4	PE4/TIOC1A	PE4	PE4/TIOC1A
102	PE5	PE5/TIOC1B	PE5	PE5/TIOC1B
104	PE6	PE6/TIOC2A	PE6	PE6/TIOC2A
105	PE7	PE7/TIOC2B	PE7	PE7/TIOC2B
106	PE8	PE8	PE8	PE8
107	PE9	PE9	PE9	PE9
108	PE10	PE10	PE10	PE10
110	PE11	PE11	PE11	PE11
111	PE12	PE12	PE12	PE12
112	PE13	PE13	PE13	PE13
1	PE14	PE14/DACK0/$\overline{\text{AH}}$	PE14	PE14/DACK0/$\overline{\text{AH}}$
2	PE15	PE15/DACK1	PE15	PE15/DACK1

Table 16.3 Pin Arrangement in Each Operating Mode (SH7016, SH7017)

Pin No.	Pin Name							
	On-Chip ROM Disabled				On-Chip ROM Enabled			
	MPU Mode0		MPU Mode 1		MPU Mode2		Single Chip Mode	
FP-112	Initial Function	PFC Selected Function Possiblilities	Initial Function	PFC Selected Function Possiblilities	Initial Function	PFC Selected Function Possiblilities	Initial Function	PFC Selected Function Possiblilities
21,37,65 103	Vcc	Vcc	Vcc	Vcc	Vcc	Vcc	Vcc	Vcc
3,23,27,33 39,55,61,71 90,101,109	Vss	Vss	Vss	Vss	Vss	Vss	Vss	Vss
70	D0	D0	D0	D0	PD0	PD0/D0	PD0	PD0
69	D1	D1	D1	D1	PD1	PD1/D1	PD1	PD1
68	D2	D2	D2	D2	PD2	PD2/D2	PD2	PD2
67	D3	D3	D3	D3	PD3	PD3/D3	PD3	PD3
66	D4	D4	D4	D4	PD4	PD4/D4	PD4	PD4
64	D5	D5	D5	D5	PD5	PD5/D5	PD5	PD5
63	D6	D6	D6	D6	PD6	PD6/D6	PD6	PD6
62	D7	D7	D7	D7	PD7	PD7/D7	PD7	PD7
60	D8	D8	D8	D8	PD8	PD8/D8	PD8	PD8
59	D9	D9	D9	D9	PD9	PD9/D9	PD9	PD9
58	D10	D10	D10	D10	PD10	PD10/D10	PD10	PD10
57	D11	D11	D11	D11	PD11	PD11/D11	PD11	PD11
56	D12	D12	D12	D12	PD12	PD12/D12	PD12	PD12
54	D13	D13	D13	D13	PD13	PD13/D13	PD13	PD13
53	D14	D14	D14	D14	PD14	PD14/D14	PD14	PD14
52	D15	D15	D15	D15	PD15	PD15/D15	PD15	PD15
4	A0	A0	A0	A0	PC0	PC0/A0	PC0	PC0
5	A1	A1	A1	A1	PC1	PC1/A1	PC1	PC1
6	A2	A2	A2	A2	PC2	PC2/A2	PC2	PC2
7	A3	A3	A3	A3	PC3	PC3/A3	PC3	PC3
8	A4	A4	A4	A4	PC4	PC4/A4	PC4	PC4
9	A5	A5	A5	A5	PC5	PC5/A5	PC5	PC5
10	A6	A6	A6	A6	PC6	PC6/A6	PC6	PC6
11	A7	A7	A7	A7	PC7	PC7/A7	PC7	PC7
12	A8	A8	A8	A8	PC8	PC8/A8	PC8	PC8
13	A9	A9	A9	A9	PC9	PC9/A9	PC9	PC9
14	A10	A10	A10	A10	PC10	PC10/A10	PC10	PC10
15	A11	A11	A11	A11	PC11	PC11/A11	PC11	PC11
16	A12	A12	A12	A12	PC12	PC12/A12	PC12	PC12

Pin No.	Pin Name							
	On-Chip ROM Disabled				On-Chip ROM Enabled			
	MPU Mode0		MPU Mode 1		MPU Mode2		Single Chip Mode	
FP-112	Initial Function	PFC Selected Function Possibilities	Initial Function	PFC Selected Function Possibilities	Initial Function	PFC Selected Function Possibilities	Initial Function	PFC Selected Function Possibilities
17	A13	A13	A13	A13	PC13	PC13/A13	PC13	PC13
18	A14	A14	A14	A14	PC14	PC14/A14	PC14	PC14
19	A15	A15	A15	A15	PC15	PC15/A15	PC15	PC15
20	A16	A16	A16	A16	PB0	PB0/A16	PB0	PB0
22	A17	A17	A17	A17	PB1	PB1/A17	PB1	PB1
24	PB2	PB2/$\overline{IRQ0}$/POE0/$\overline{RAS}$	PB2	PB2/IRQ0/$\overline{RAS}$	PB2	PB2/$\overline{IRQ0}$/$\overline{RAS}$	PB2	PB2/$\overline{IRQ0}$
25	PB3	PB3/$\overline{IRQ1}$/POE1/$\overline{CASL}$	PB3	PB3/IRQ1/$\overline{CASL}$	PB3	PB3/$\overline{IRQ1}$/$\overline{CASL}$	PB3	PB3/$\overline{IRQ1}$
26	PB4	PB4/$\overline{IRQ2}$/POE2/$\overline{CASH}$	PB4	PB4/IRQ2/$\overline{CASH}$	PB4	PB4/$\overline{IRQ2}$/$\overline{CASH}$	PB4	PB4/$\overline{IRQ2}$
28	PB5	PB5/$\overline{IRQ3}$/POE3/RDWR	PB5	PB5/IRQ3/RDWR	PB5	PB5/$\overline{IRQ3}$/RDWR	PB5	PB5/$\overline{IRQ3}$
29	PB6	PB6/A18	PB6	PB6/A18	PB6	PB6/A18	PB6	PB6
30	PB7	PB7/A19	PB7	PB7/A19	PB7	PB7/A19	PB7	PB7
31	PB8	PB8/$\overline{IRQ6}$/A20/$\overline{WAIT}$	PB8	PB8/IRQ6/A20/$\overline{WAIT}$	PB8	PB8/$\overline{IRQ6}$/A20/$\overline{WAIT}$	PB8	PB8/$\overline{IRQ6}$
32	PB9	PB9/$\overline{IRQ7}$/A21	PB9	PB9/IRQ7/A21	PB9	PB9/$\overline{IRQ7}$/A21	PB9	PB9/$\overline{IRQ7}$
51	PA0	PA0/RXD0	PA0	PA0/RXD0	PA0	PA0/RXD0	PA0	PA0/RXD0
50	PA1	PA1/TXD0	PA1	PA1/TXD0	PA1	PA1/TXD0	PA1	PA1/TXD0
49	PA2	PA2/SCK0/$\overline{DREQ0}$/$\overline{IRQ0}$	PA2	PA2/SCK0/DREQ0/$\overline{IRQ0}$	PA2	PA2/SCK0/$\overline{DREQ0}$/$\overline{IRQ0}$	PA2	PA2/SCK0/$\overline{IRQ0}$
48	PA3	PA3/RXD1	PA3	PA3/RXD1	PA3	PA3/RXD1	PA3	PA3/RXD1
47	PA4	PA4/TXD1	PA4	PA4/TXD1	PA4	PA4/TXD1	PA4	PA4/TXD1
46	PA5	PA5/SCK1/$\overline{DREQ1}$/$\overline{IRQ1}$	PA5	PA5/SCK1/DREQ1/$\overline{IRQ1}$	PA5	PA5/SCK1/$\overline{DREQ1}$/$\overline{IRQ1}$	PA5	PA5/SCK1/$\overline{IRQ1}$
45	PA6	PA6/TCLKA/$\overline{CS2}$	PA6	PA6/TCLKA/$\overline{CS2}$	PA6	PA6/TCLKA/$\overline{CS2}$	PA6	PA6/TCLKA
44	PA7	PA7/TCLKB/$\overline{CS3}$	PA7	PA7/TCLKB/$\overline{CS3}$	PA7	PA7/TCLKB/$\overline{CS3}$	PA7	PA7/TCLKB
43	PA8	PA8/TCLKC/$\overline{IRQ2}$	PA8	PA8/TCLKC/$\overline{IRQ2}$	PA8	PA8/TCLKC/$\overline{IRQ2}$	PA8	PA8/TCLKC/$\overline{IRQ2}$
42	PA9	PA9/TCLKD/$\overline{IRQ3}$	PA9	PA9/TCLKD/$\overline{IRQ3}$	PA9	PA9/TCLKD/$\overline{IRQ3}$	PA9	PA9/TCLKD/$\overline{IRQ3}$
41	$\overline{CS0}$	$\overline{CS0}$	$\overline{CS0}$	$\overline{CS0}$	PA10	PA10/$\overline{CS0}$	PA10	PA10
40	$\overline{CS1}$	$\overline{CS1}$	$\overline{CS1}$	$\overline{CS1}$	PA11	PA11/$\overline{CS1}$	PA11	PA11
38	$\overline{WRL}$	$\overline{WRL}$	$\overline{WRL}$	$\overline{WRL}$	PA12	PA12/$\overline{WRL}$	PA12	PA12
36	$\overline{WRH}$	$\overline{WRH}$	$\overline{WRH}$	$\overline{WRH}$	PA13	PA13/$\overline{WRH}$	PA13	PA13
34	$\overline{RD}$	$\overline{RD}$	$\overline{RD}$	$\overline{RD}$	PA14	PA14/$\overline{RD}$	PA14	PA14
83	CK	PA15/CK	CK	PA15/CK	CK	PA15/CK	PA15	PA15/CK
80	$PLLV_{CC}$	$PLLV_{CC}$	$PLLV_{CC}$	$PLLV_{CC}$	$PLLV_{CC}$	$PLLV_{CC}$	$PLLV_{CC}$	$PLLV_{CC}$
82	$PLLV_{SS}$	$PLLV_{SS}$	$PLLV_{SS}$	$PLLV_{SS}$	$PLLV_{SS}$	$PLLV_{SS}$	$PLLV_{SS}$	$PLLV_{SS}$
74	EXTAL	EXTAL	EXTAL	EXTAL	EXTAL	EXTAL	EXTAL	EXTAL
72	XTAL	XTAL	XTAL	XTAL	XTAL	XTAL	XTAL	XTAL
81	PLLCAP	PLLCAP	PLLCAP	PLLCAP	PLLCAP	PLLCAP	PLLCAP	PLLCAP
76	NMI	NMI	NMI	NMI	NMI	NMI	NMI	NMI
84	$\overline{RES}$	$\overline{RES}$	$\overline{RES}$	$\overline{RES}$	$\overline{RES}$	$\overline{RES}$	$\overline{RES}$	$\overline{RES}$
35	$\overline{WDTOVF}$	$\overline{WDTOVF}$	$\overline{WDTOVF}$	$\overline{WDTOVF}$	$\overline{WDTOVF}$	$\overline{WDTOVF}$	$\overline{WDTOVF}$	$\overline{WDTOVF}$
79	MD0	MD0	MD0	MD0	MD0	MD0	MD0	MD0
78	MD1	MD1	MD1	MD1	MD1	MD1	MD1	MD1
75	MD2	MD2	MD2	MD2	MD2	MD2	MD2	MD2
73	MD3	MD3	MD3	MD3	MD3	MD3	MD3	MD3
77	V_{CC}	V_{CC}	V_{CC}	V_{CC}	V_{CC}	V_{CC}	V_{CC}	V_{CC}
100	AV_{CC}	AV_{CC}	AV_{CC}	AV_{CC}	AV_{CC}	AV_{CC}	AV_{CC}	AV_{CC}
97	AV_{SS}	AV_{SS}	AV_{SS}	AV_{SS}	AV_{SS}	AV_{SS}	AV_{SS}	AV_{SS}

Pin No.	Pin Name							
	On-Chip ROM Disabled				On-Chip ROM Enabled			
	MPU Mode0		MPU Mode 1		MPU Mode2		Single Chip Mode	
FP-112	Initial Function	PFC Selected Function Possibilities	Initial Function	PFC Selected Function Possibilities	Initial Function	PFC Selected Function Possibilities	Initial Function	PFC Selected Function Possibilities
91	PF0/AN0	PF0/AN0	PF0/AN0	PF0/AN0	PF0/AN0	PF0/AN0	PF0/AN0	PF0/AN0
92	PF1/AN1	PF1/AN1	PF1/AN1	PF1/AN1	PF1/AN1	PF1/AN1	PF1/AN1	PF1/AN1
93	PF2/AN2	PF2/AN2	PF2/AN2	PF2/AN2	PF2/AN2	PF2/AN2	PF2/AN2	PF2/AN2
94	PF3/AN3	PF3/AN3	PF3/AN3	PF3/AN3	PF3/AN3	PF3/AN3	PF3/AN3	PF3/AN3
95	PF4/AN4	PF4/AN4	PF4/AN4	PF4/AN4	PF4/AN4	PF4/AN4	PF4/AN4	PF4/AN4
96	PF5/AN5	PF5/AN5	PF5/AN5	PF5/AN5	PF5/AN5	PF5/AN5	PF5/AN5	PF5/AN5
98	PF6/AN6	PF6/AN6	PF6/AN6	PF6/AN6	PF6/AN6	PF6/AN6	PF6/AN6	PF6/AN6
99	PF7/AN7	PF7/AN7	PF7/AN7	PF7/AN7	PF7/AN7	PF7/AN7	PF7/AN7	PF7/AN7
85	PE0	PE0/TIOC0A/$\overline{\text{DREQ0}}$	PE0	PE0/TIOC0A/$\overline{\text{DREQ0}}$	PE0	PE0/TIOC0A/$\overline{\text{DREQ0}}$	PE0	PE0/TIOC0A
86	PE1	PE1/TIOC0B/DRAK0	PE1	PE1/TIOC0B/DRAK0	PE1	PE1/TIOC0B/DRAK0	PE1	PE1/TIOC0B
87	PE2	PE2/TIOC0C/$\overline{\text{DREQ1}}$	PE2	PE2/TIOC0C/$\overline{\text{DREQ1}}$	PE2	PE2/TIOC0C/$\overline{\text{DREQ1}}$	PE2	PE2/TIOC0C
88	PE3	PE3/TIOC0D/DRAK1	PE3	PE3/TIOC0D/DRAK1	PE3	PE3/TIOC0D/DRAK1	PE3	PE3/TIOC0D
89	PE4	PE4/TIOC1A	PE4	PE4/TIOC1A	PE4	PE4/TIOC1A	PE4	PE4/TIOC1A
102	PE5	PE5/TIOC1B	PE5	PE5/TIOC1B	PE5	PE5/TIOC1B	PE5	PE5/TIOC1B
104	PE6	PE6/TIOC2A	PE6	PE6/TIOC2A	PE6	PE6/TIOC2A	PE6	PE6/TIOC2A
105	PE7	PE7/TIOC2B	PE7	PE7/TIOC2B	PE7	PE7/TIOC2B	PE7	PE7/TIOC2B
106	PE8	PE8	PE8	PE8	PE8	PE8	PE8	PE8
107	PE9	PE9	PE9	PE9	PE9	PE9	PE9	PE9
108	PE10	PE10	PE10	PE10	PE10	PE10	PE10	PE10
110	PE11	PE11	PE11	PE11	PE11	PE11	PE11	PE11
111	PE12	PE12	PE12	PE12	PE12	PE12	PE12	PE12
112	PE13	PE13	PE13	PE13	PE13	PE13	PE13	PE13
1	PE14	PE14/DACK0/$\overline{\text{AH}}$	PE14	PE14/DACK0/$\overline{\text{AH}}$	PE14	PE14/DACK0/$\overline{\text{AH}}$	PE14	PE14
2	PE15	PE15/DACK1	PE15	PE15/DACK1	PE15	PE15/DACK1	PE15	PE15

16.2 Register Configuration

Table 16.4 summarizes the registers of the pin function controller.

Table 16.4 Pin Function Controller Registers

Name	Abbreviation	R/W	Initial Value	Address	Access Size
Port A I/O register L	PAIORL	R/W	H'0000	H'FFFF8386 H'FFFF8387	8, 16, 32
Port A control register L1	PACRL1	R/W	H'0000*[1] H'4000	H'FFFF838C H'FFFF838D	8, 16, 32
Port A control register L2	PACRL2	R/W	H'0000	H'FFFF838E H'FFFF838F	8, 16, 32
Port B I/O register	PBIOR	R/W	H'0000	H'FFFF8394 H'FFFF8395	8, 16, 32
Port B control register 1	PBCR1	R/W	H'0000	H'FFFF8398 H'FFFF8399	8, 16, 32
Port B control register 2	PBCR2	R/W	H'0000	H'FFFF839A H'FFFF839B	8, 16, 32
Port C I/O register*[2]	PCIOR	R/W	H'0000	H'FFFF8396 H'FFFF8397	8, 16, 32
Port C control register*[2]	PCCR	R/W	H'0000	H'FFFF839C H'FFFF839D	8, 16, 32
Port D I/O register L*[2]	PDIORL	R/W	H'0000	H'FFFF83A6 H'FFFF83A7	8, 16, 32
Port D control register L*[2]	PDCRL	R/W	H'0000	H'FFFF83AC H'FFFF83AD	8, 16, 32
Port E I/O register	PEIOR	R/W	H'0000	H'FFFF83B4 H'FFFF83B5	8, 16, 32
Port E control register 1	PECR1	R/W	H'0000	H'FFFF83B8 H'FFFF83B9	8, 16, 32
Port E control register 2	PECR2	R/W	H'0000	H'FFFF83BA H'FFFF83BB	8, 16, 32

Notes: 1. The port A control register L1 initial value varies depending on the operating mode.
2. SH7016, SH7017 only.

16.3 Register Descriptions

16.3.1 Port A I/O Register L (PAIORL)

Bit:	15	14	13	12	11	10	9	8
	PA15 IOR	PA14 IOR	PA13 IOR	PA12 IOR	PA11 IOR	PA10 IOR	PA9 IOR	PA8 IOR
Initial value:	0	0	0	0	0	0	0	0
R/W:	R/W	R/W*	R/W*	R/W*	R/W*	R/W*	R/W	R/W

Bit:	7	6	5	4	3	2	1	0
	PA7 IOR	PA6 IOR	PA5 IOR	PA4 IOR	PA3 IOR	PA2 IOR	PA1 IOR	PA0 IOR
Initial value:	0	0	0	0	0	0	0	0
R/W:	R/W	R/W	R/W	R/W	R/W	R/W	R/W	R/W

Note: * R only in the SH7014

The port A I/O register L (PAIORL) is a 16-bit read/write register that selects input or output for the 16 pins of port A (11 pins in the SH7014). Bits PA15IOR to PA0IOR correspond to pins PA15/CK to PA0/RXD0. PAIORL is enabled when the port A pins function as general input/outputs (PA15 to PA0), or with the serial clock (SCK1, SCK0). For other functions, it is disabled.

When the port A pin functions PA15 to PA0 are SCK1, SCK0, a given pin in port A is an output pin if its corresponding PAIORL bit is set to 1, and an input pin if the bit is cleared to 0.

PAIORL is initialized to H'0000 by external power-on reset; however, it is not initialized for reset by WDT, standby mode, or sleep mode, so the previous data is maintained.

The settings of bits 14 to 10 of this register are functional only in the SH7016 and SH7017. In the SH7014, there are no pins corresponding to bits 14 to 10; these bits are always read as 0, and their write value should always be 0.

16.3.2 Port A Control Registers L1, L2 (PACRL1 and PACRL2)

PACRL1 and PACRL2 are 16-bit read/write registers that select the functions of the 16 multiplexed pins of port A (11 pins in the SH7014). PACRL1 selects the function of the PA15/CK to PA8/TCLKC/$\overline{\text{IRQ2}}$ pins of port A; PACRL2 selects the function of the PA7/TCLKB/$\overline{\text{CS3}}$ to PA0/RXD0 pins of port A.

Port A includes bus control signals ($\overline{\text{RD}}$, $\overline{\text{WRH}}$, $\overline{\text{WRL}}$, $\overline{\text{CS0}}$ to $\overline{\text{CS3}}$, and $\overline{\text{AH}}$) and DMAC control signals ($\overline{\text{DREQ0}}$ and $\overline{\text{DREQ1}}$), but in the SH7016 and SH7017, register settings relating to the selection of these pin functions may be invalid depending on the operating mode. For details, see table 16.2, Pin Functions in Each Operating Mode.

PACRL1 is initialized by external power-on reset to H'4000 in extended mode, and to H'0000 in single chip mode. PACRL2 is initialized by external power-on reset to H'0000. Neither register is initialized by reset by WDT, standby mode, or sleep mode, so the previous data is maintained.

The settings of bits 12, 10, 8, 6, and 4 of PACRL1 are functional only in the SH7016 and SH7017. In the SH7014, there are no pins corresponding to these bits; they are always read as 0, and their write value should always be 0.

Port A Control Register L1 (PACRL1):

Bit:	15	14	13	12	11	10	9	8
	—	PA15MD	—	PA14MD	—	PA13MD	—	PA12MD
Initial value:	0	0 (1)*1	0	0	0	0	0	0
R/W:	R	R/W	R	R/W*2	R	R/W*2	R	R/W*2

Bit:	7	6	5	4	3	2	1	0
	—	PA11MD	—	PA10MD	PA9MD1	PA9MD0	PA8MD1	PA8MD0
Initial value:	0	0	0	0	0	0	0	0
R/W:	R	R/W*2	R	R/W*2	R/W	R/W	R/W	R/W

Notes: 1. Bit 14 is initialized to 1 in extended mode.
2. R only in the SH7014.

Bit 15—Reserved: This bit always reads as 0. The write value should always be 0.

Bit 14—PA15 Mode (PA15MD): Selects the function of the PA15/CK pin.

Bit 14 PA15MD	Description	
0	General input/output (PA15)	(single chip mode initial value)
1	Clock output (CK)	(extended mode initial value)

Bits 13—Reserved: This bit always read as 0. The write value should always be 0.

Bit 12—PA14 Mode (PA14MD) —SH7016, SH7017—: Selects the function of the PA14/$\overline{\text{RD}}$ pin.

Bit 12 PA14MD	Description	
0	General input/output (PA14) ($\overline{\text{RD}}$ in on-chip ROM invalid mode)	(initial value)
1	Read output ($\overline{\text{RD}}$) (PA14 in single chip mode)	

Bit 11—Reserved: This bit always reads as 0. The write value should always be 0.

Bit 10—PA13 Mode (PA13MD) —SH7016, SH7017—: Selects the function of the PA13/$\overline{\text{WRH}}$ pin.

Bit 10 PA13MD	Description	
0	General input/output (PA13) ($\overline{\text{WRH}}$ in on-chip ROM invalid mode)	(initial value)
1	Most significant side write output ($\overline{\text{WRH}}$) (PA13 in single chip mode)	

Bit 9—Reserved: This bit always reads as 0. The write value should always be 0.

Bit 8—PA12 Mode (PA12MD) —SH7016, SH7017—: Selects the function of the PA12/$\overline{\text{WRL}}$ pin.

Bit 8 PA12MD	Description	
0	General input/output (PA12) ($\overline{\text{WRL}}$ in on-chip ROM invalid mode)	(initial value)
1	Least significant side write output ($\overline{\text{WRL}}$) (PA12 in single chip mode)	

Bit 7—Reserved: This bit always reads as 0. The write value should always be 0.

Bit 6—PA11 Mode (PA11MD) —SH7016, SH7017—: Selects the function of the PA11/$\overline{\text{CS1}}$ pin.

Bit 6 PA11MD	Description	
0	General input/output (PA11) ($\overline{\text{CS1}}$ in on-chip ROM invalid mode)	(initial value)
1	Chip select output ($\overline{\text{CS1}}$) (PA11 in single chip mode)	

Bit 5—Reserved: This bit always reads as 0. The write value should always be 0.

Bit 4—PA10 Mode (PA10MD) —SH7016, SH7017—: Selects the function of the PA10/$\overline{\text{CS0}}$ pin.

Bit 4 PA10MD	Description	
0	General input/output (PA10) ($\overline{\text{CS0}}$ in on-chip ROM invalid mode)	(initial value)
1	Chip select output ($\overline{\text{CS0}}$) (PA10 in single chip mode)	

Bits 3 and 2—PA9 Mode 1, 0 (PA9MD1 and PA9MD0): These bits select the function of the PA9/TCLKD/$\overline{\text{IRQ3}}$ pin.

Bit 3 PA9MD1	Bit 2 PA9MD0	Description	
0	0	General input/output (PA9)	(initial value)
	1	MTU timer clock input (TCLKD)	
1	0	Interrupt request input ($\overline{\text{IRQ3}}$)	
	1	Reserved	

Bits 1 and 0—PA8 Mode 1, 0 (PA8MD1 and PA8MD0): These bits select the function of the PA8/TCLKC/$\overline{\text{IRQ2}}$ pin.

Bit 1 PA8MD1	Bit 0 PA8MD0	Description	
0	0	General input/output (PA8)	(initial value)
	1	MTU timer clock input (TCLKC)	
1	0	Interrupt request input ($\overline{\text{IRQ2}}$)	
	1	Reserved	

Port A Control Register L2 (PACRL2):

Bit:	15	14	13	12	11	10	9	8
	PA7 MD1	PA7 MD0	PA6 MD1	PA6 MD0	PA5 MD1	PA5 MD0	—	PA4MD
Initial value:	0	0	0	0	0	0	0	0
R/W:	R/W	R/W	R/W	R/W	R/W	R/W	R	R/W

Bit:	7	6	5	4	3	2	1	0
	—	PA3MD	PA2 MD1	PA2 MD0	—	PA1MD	—	PA0MD
Initial value:	0	0	0	0	0	0	0	0
R/W:	R	R/W	R/W	R/W	R	R/W	R	R/W

Bits 15 and 14—PA7 Mode 1, 0 (PA7MD1 and PA7MD0): These bits select the function of the PA7/TCLKB/$\overline{\text{CS3}}$ pin.

Bit 15 PA7MD1	Bit 14 PA7MD0	Description	
0	0	General input/output (PA7)	(initial value)
	1	MTU timer clock input (TCLKB)	
1	0	Chip select output ($\overline{\text{CS3}}$) (PA7 in single-chip mode)	
	1	Reserved	

Bits 13 and 12—PA6 Mode 1, 0 (PA6MD1 and PA6MD0): These bits select the function of the PA6/TCLKA/$\overline{\text{CS2}}$ pin.

Bit 13 PA6MD1	Bit 12 PA6MD0	Description	
0	0	General input/output (PA6)	(initial value)
	1	MTU timer clock input (TCLKA)	
1	0	Chip select output ($\overline{\text{CS2}}$) (PA6 in single-chip mode)	
	1	Reserved	

Bits 11 and 10—PA5 Mode 1, 0 (PA5MD1 and PA5MD0): These bits select the function of the PA5/SCK1/$\overline{\text{DREQ1}}$/$\overline{\text{IRQ1}}$ pin.

Bit 11 PA5MD1	Bit 10 PA5MD0	Description	
0	0	General input/output (PA5)	(initial value)
	1	Serial clock input/output (SCK1)	
1	0	DMA transfer request received input ($\overline{\text{DREQ1}}$) (PA5 in single-chip mode)	
	1	Interrupt request input ($\overline{\text{IRQ1}}$)	

Bit 9—Reserved: This bit always reads as 0. The write value should always be 0.

Bit 8—PA4 Mode (PA4MD): Selects the function of the PA4/TxD1 pin.

Bit 8 PA4MD	Description	
0	General input/output (PA4)	(initial value)
1	Transmit data output (TxD1)	

Bit 7—Reserved: This bit always reads as 0. The write value should always be 0.

Bit 6—PA3 Mode (PA3MD): Selects the function of the PA3/RxD1 pin.

Bit 6 PA3MD	Description	
0	General input/output (PA3)	(initial value)
1	Receive data input (RxD1)	

Bits 5 and 4—PA2 Mode 1, 0 (PA2MD1 and PA2MD0): These bits select the function of the PA2/SCK0/$\overline{\text{DREQ0}}$/$\overline{\text{IRQ0}}$ pin.

Bit 5 PA2MD1	Bit 4 PA2MD0	Description	
0	0	General input/output (PA2)	(initial value)
	1	Serial clock input/output (SCK0)	
1	0	DMA transfer request received input ($\overline{\text{DREQ0}}$) (PA2 in single-chip mode)	
	1	Interrupt request input ($\overline{\text{IRQ0}}$)	

Bit 3—Reserved: This bit always reads as 0. The write value should always be 0.

Bit 2—PA1 Mode (PA1MD): Selects the function of the PA1/TxD0 pin.

Bit 2 PA1MD	Description	
0	General input/output (PA1)	(initial value)
1	Transmit data output (TxD0)	

Bit 1—Reserved: This bit always reads as 0. The write value should always be 0.

Bit 0—PA0 Mode (PA0MD): Selects the function of the PA0/RxD0 pin.

Bit 0 PA0MD	Description	
0	General input/output (PA0)	(initial value)
1	Receive data input (RxD0)	

16.3.3 Port B I/O Register (PBIOR)

Bit:	15	14	13	12	11	10	9	8
	—	—	—	—	—	—	PB9 IOR	PB8 IOR
Initial value:	0	0	0	0	0	0	0	0
R/W:	R	R	R	R	R	R	R/W	R/W

Bit:	7	6	5	4	3	2	1	0
	PB7 IOR	PB6 IOR	PB5 IOR	PB4 IOR	PB3 IOR	PB2 IOR	PB1 IOR	PB0 IOR
Initial value:	0	0	0	0	0	0	0	0
R/W:	R/W	R/W	R/W	R/W	R/W	R/W	R/W*	R/W*

Note: * R only in the SH7014.

The port B I/O register L (PBIOR) is a 16-bit read/write register that selects input or output for the ten pins of port B (eight pins in the SH7014). Bits PB9IOR to PB0IOR correspond to the PB9/$\overline{\text{IRQ7}}$/A21 pin to PB0/A16 pin. PBIOR is enabled when the port B pins function as input/outputs (PB9 to PB0). For other functions, it is disabled.

For port B pin functions PB9 to PB0, a given pin in port B is an output pin if its corresponding PBIOR bit is set to 1, and an input pin if the bit is cleared to 0.

PBIOR is initialized to H'0000 by external power-on reset; however, it is not initialized for reset by WDT, standby mode, or sleep mode, so the previous data is maintained.

The settings of bits 1 and 0 of PBIOR are functional only in the SH7016 and SH7017. In the SH7014, there are no pins corresponding to these bits; they are always read as 0, and their write value should always be 0.

16.3.4 Port B Control Registers (PBCR1 and PBCR2)

PBCR1 and PBCR2 are 16-bit read/write registers that select the functions of the ten multiplexed pins of port B (eight pins in the SH7014). PBCR1 selects the functions of the top two bits of port B; PBCR2 selects the functions of the bottom eight bits of port B (six bits in the SH7014).

Port B includes bus control signals (RDWR, $\overline{\text{RAS}}$, $\overline{\text{CASH}}$, $\overline{\text{CASL}}$, and $\overline{\text{WAIT}}$) and address outputs (A21 to A16), but in the SH7016 and SH7017, settings in these registers relating to the selection of these pin functions may be invalid in single-chip mode. For details, see table 16.3, Pin Functions in Each Operating Mode.

PBCR1 and PBCR2 are both initialized to H'0000 by external power-on reset but are not initialized for reset by WDT, standby mode, or sleep mode, so the previous data is maintained.

The settings of bits 2 and 0 of PBCR2 are functional only in the SH7016 and SH7017. In the SH7014, there are no pins corresponding to these bits; they are always read as 0, and their write value should always be 0.

Port B Control Register 1 (PBCR1):

Bit:	15	14	13	12	11	10	9	8
	—	—	—	—	—	—	—	—
Initial value:	0	0	0	0	0	0	0	0
R/W:	R	R	R	R	R	R	R	R

Bit:	7	6	5	4	3	2	1	0
	—	—	—	—	PB9 MD1	PB9 MD0	PB8 MD1	PB8 MD0
Initial value:	0	0	0	0	0	0	0	0
R/W:	R	R	R	R	R/W	R/W	R/W	R/W

Bits 15 to 4—Reserved: These bits always read as 0. The write value should always be 0.

Bits 3 and 2—PB9 Mode 1, 0 (PB9MD1 and PB9MD0): PB9MD1 and PB9MD0 select the function of the PB9/$\overline{\text{IRQ7}}$/A21 pin.

Bit 3 PB9MD1	Bit 2 PB9MD0	Description	
0	0	General input/output (PB9)	(initial value)
	1	Interrupt request input ($\overline{\text{IRQ7}}$)	
1	0	Address output (A21) (PB9 in single-chip mode)	
	1	Reserved	

Bits 1 and 0—PB8 Mode 1, 0 (PB8MD1 and PB8MD0): PB8MD1 and PB8MD0 select the function of the PB8/$\overline{\text{IRQ6}}$/A20/$\overline{\text{WAIT}}$ pin.

Bit 1 PB8MD1	Bit 0 PB8MD0	Description	
0	0	General input/output (PB8)	(initial value)
	1	Interrupt request input ($\overline{\text{IRQ6}}$)	
1	0	Address output (A20) (PB8 in single-chip mode)	
	1	Wait state request input ($\overline{\text{WAIT}}$) (PB8 in single-chip mode)	

Port B Control Register 2 (PBCR2):

Bit:	15	14	13	12	11	10	9	8
	PB7MD1	PB7MD0	PB6MD1	PB6MD0	PB5MD1	PB5MD0	PB4MD1	PB4MD0
Initial value:	0	0	0	0	0	0	0	0
R/W:	R/W	R/W	R/W	R/W	R/W	R/W	R/W	R/W

Bit:	7	6	5	4	3	2	1	0
	PB3MD1	PB3MD0	PB2MD1	PB2MD0	—	PB1MD	—	PB0MD
Initial value:	0	0	0	0	0	0	0	0
R/W:	R/W	R/W	R/W	R/W	R	R/W*	R	R/W*

Note: * R only in the SH7014.

Bits 15 and 14—PB7 Mode 1, 0 (PB7MD1 and PB7MD0): PB7MD1 and PB7MD0 select the function of the PB7/A19 pin.

Bit 15 PB7MD1	Bit 14: PB7MD0	Description	
0	0	General input/output (PB7)	(initial value)
	1	Reserved	
1	0	Address output (A19) (PB7 in single-chip mode)	
	1	Reserved	

Bits 13 and 12—PB6 Mode 1, 0 (PB6MD1 and PB6MD0): PB6MD1 and PB6MD0 select the function of the PB6/A18 pin.

Bit 13 PB6MD1	Bit 12 PB6MD0	Description	
0	0	General input/output (PB6)	(initial value)
	1	Reserved	
1	0	Address output (A18) (PB6 in single-chip mode)	
	1	Reserved	

Bits 11 and 10—PB5 Mode 1, 0 (PB5MD1 and PB5MD0): PB5MD1 and PB5MD0 select the function of the PB5/$\overline{\text{IRQ3}}$/RDWR pin.

Bit 11 PB5MD1	Bit 10 PB5MD0	Description	
0	0	General input/output (PB5)	(initial value)
	1	Interrupt request input ($\overline{\text{IRQ3}}$)	
1	0	Reserved	
	1	Read/write output (RDWR) (PB5 in single-chip mode)	

Bits 9 and 8—PB4 Mode 1, 0 (PB4MD1 and PB4MD0): PB4MD1 and PB4MD0 select the function of the PB4/$\overline{\text{IRQ2}}$/$\overline{\text{CASH}}$ pin.

Bit 9 PB4MD1	Bit 8 PB4MD0	Description	
0	0	General input/output (PB4)	(initial value)
	1	Interrupt request input ($\overline{\text{IRQ2}}$)	
1	0	Reserved	
	1	Column address strobe ($\overline{\text{CASH}}$) (PB4 in single-chip mode)	

Bits 7 and 6—PB3 Mode 1, 0 (PB3MD1 and PB3MD0): PB3MD1 and PB3MD0 select the function of the PB3/$\overline{\text{IRQ1}}$/$\overline{\text{CASL}}$ pin.

Bit 7 PB3MD1	Bit 6 PB3MD0	Description	
0	0	General input/output (PB3)	(initial value)
	1	Interrupt request input ($\overline{\text{IRQ1}}$)	
1	0	Reserved	
	1	Column address strobe ($\overline{\text{CASL}}$) (PB3 in single-chip mode)	

Bits 5 and 4—PB2 Mode 1, 0 (PB2MD1 and PB2MD0): PB2MD1 and PB2MD0 select the function of the PB2/$\overline{\text{IRQ0}}$/$\overline{\text{RAS}}$ pin.

Bit 5 PB2MD1	Bit 4 PB2MD0	Description	
0	0	General input/output (PB2)	(initial value)
	1	Interrupt request input ($\overline{\text{IRQ0}}$)	
1	0	Reserved	
	1	Row address strobe ($\overline{\text{RAS}}$) (PB2 in single-chip mode)	

Bit 3—Reserved: This bit always reads as 0. The write value should always be 0.

Bit 2—PB1 Mode (PB1MD) —SH7016, SH7017—: Selects the function of the PB1/A17 pin.

Bit 2 PB1MD	Description	
0	General input/output (PB1) (A17 in on-chip ROM invalid mode)	(initial value)
1	Address output (A17) (PB1 in single chip mode)	

Bit 1—Reserved: This bit always reads as 0. The write value should always be 0.

Bit 0—PB0 Mode (PB0MD) —SH7016, SH7017—: Selects the function of the PB0/A16 pin.

Bit 0 PB0MD	Description	
0	General input/output (PB0) (A16 in on-chip ROM invalid mode)	(initial value)
1	Address output (A16) (PB0 in single chip mode)	

16.3.5 Port C I/O Register (PCIOR) — SH7016, SH7017 —

Bit:	15	14	13	12	11	10	9	8
	PC15 IOR	PC14 IOR	PC13 IOR	PC12 IOR	PC11 IOR	PC10 IOR	PC9 IOR	PC8 IOR
Initial value:	0	0	0	0	0	0	0	0
R/W:	R/W	R/W	R/W	R/W	R/W	R/W	R/W	R/W

Bit:	7	6	5	4	3	2	1	0
	PC7 IOR	PC6 IOR	PC5 IOR	PC4 IOR	PC3 IOR	PC2 IOR	PC1 IOR	PC0 IOR
Initial value:	0	0	0	0	0	0	0	0
R/W:	R/W	R/W	R/W	R/W	R/W	R/W	R/W	R/W

The port C I/O register (PCIOR) is a 16-bit read/write register that selects input or output for the 16 port C pins. Bits PC15IOR to PC0IOR correspond to pins PC15/A15 to PC0/A0. PCIOR is enabled when the port C pins function as general input/outputs (PC15 to PC0). For other functions, it is disabled.

When the port C pin functions are as PC15 to PC0, a given pin in port C is an output pin if its corresponding PCIOR bit is set to 1, and an input pin if the bit is cleared to 0.

PCIOR is initialized to H'0000 by external power-on reset; however, it is not initialized for reset by WDT, standby mode, or sleep mode, so the previous values are maintained.

The settings in this register are functional only in the SH7016 and SH7017. In the SH7014, there are no pins corresponding to this register, and it should not be read or written to.

16.3.6 Port C Control Register (PCCR) — SH7016, SH7017 —

Bit:	15	14	13	12	11	10	9	8
	PC15 MD	PC14 MD	PC13 MD	PC12 MD	PC11 MD	PC10 MD	PC9 MD	PC8 MD
Initial value:	0	0	0	0	0	0	0	0
R/W:	R/W	R/W	R/W	R/W	R/W	R/W	R/W	R/W

Bit:	7	6	5	4	3	2	1	0
	PC7 MD	PC6 MD	PC5 MD	PC4 MD	PC3 MD	PC2 MD	PC1 MD	PC0 MD
Initial value:	0	0	0	0	0	0	0	0
R/W:	R/W	R/W	R/W	R/W	R/W	R/W	R/W	R/W

PCCR is a 16-bit read/write register that selects the functions for the sixteen port C multiplexed pins. There are instances when these register settings will be ignored, depending on the operation mode. Refer to table 16.3, Pin Arrangement by Mode, for details.

PCCR is initialized to H'0000 by power-on resets but is not initialized for reset by WDT, standby mode, or sleep mode, so the previous data is maintained.

The settings in this register are functional only in the SH7016 and SH7017. In the SH7014, there are no pins corresponding to this register, and it should not be read or written to.

Bit 15—PC15 Mode (PC15MD): Selects the function of the PC15/A15 pin.

Bit 15 PC15MD	Description
0	General input/output (PC15) (initial value) (A15 in on-chip ROM invalid mode)
1	Address output (A15) (PC15 in single chip mode)

Bit 14—PC14 Mode (PC14MD): Selects the function of the PC14/A14 pin.

Bit 14 PC14MD	Description	
0	General input/output (PC14) (A14 in on-chip ROM invalid mode)	(initial value)
1	Address output (A14) (PC14 in single chip mode)	

Bit 13—PC13 Mode (PC13MD): Selects the function of the PC13/A13 pin.

Bit 13 PC13MD	Description	
0	General input/output (PC13) (A13 in on-chip ROM invalid mode)	(initial value)
1	Address output (A13) (PC13 in single chip mode)	

Bit 12—PC12 Mode (PC12MD): Selects the function of the PC12/A12 pin.

Bit 12 PC12MD	Description	
0	General input/output (PC12) (A12 in on-chip ROM invalid mode)	(initial value)
1	Address output (A12) (PC12 in single chip mode)	

Bit 11—PC11 Mode (PC11MD): Selects the function of the PC11/A11 pin.

Bit 11 PC11MD	Description	
0	General input/output (PC11) (A11 in on-chip ROM invalid mode)	(initial value)
1	Address output (A11) (PC11 in single chip mode)	

Bit 10—PC10 Mode (PC10MD): Selects the function of the PC10/A10 pin.

Bit 10 PC10MD	Description	
0	General input/output (PC10) (A10 in on-chip ROM invalid mode)	(initial value)
1	Address output (A10) (PC10 in single chip mode)	

Bit 9—PC9 Mode (PC9MD): Selects the function of the PC9/A9 pin.

Bit 9 PC9MD	Description	
0	General input/output (PC9) (A9 in on-chip ROM invalid mode)	(initial value)
1	Address output (A9) (PC9 in single chip mode)	

Bit 8—PC8 Mode (PC8MD): Selects the function of the PC8/A8 pin.

Bit 8 PC8MD	Description	
0	General input/output (PC8) (A8 in on-chip ROM invalid mode)	(initial value)
1	Address output (A8) (PC8 in single chip mode)	

Bit 7—PC7 Mode (PC7MD): Selects the function of the PC7/A7 pin.

Bit 7 PC7MD	Description	
0	General input/output (PC7) (A7 in on-chip ROM invalid mode)	(initial value)
1	Address output (A7) (PC7 in single chip mode)	

Bit 6—PC6 Mode (PC6MD): Selects the function of the PC6/A6 pin.

Bit 6 PC6MD	Description	
0	General input/output (PC6) (A6 in on-chip ROM invalid mode)	(initial value)
1	Address output (A6) (PC6 in single chip mode)	

Bit 5—PC5 Mode (PC5MD): Selects the function of the PC5/A5 pin.

Bit 5 PC5MD	Description	
0	General input/output (PC5) (A5 in on-chip ROM invalid mode)	(initial value)
1	Address output (A5) (PC5 in single chip mode)	

Bit 4—PC4 Mode (PC4MD): Selects the function of the PC4/A4 pin.

Bit 4 PC4MD	Description	
0	General input/output (PC4) (A4 in on-chip ROM invalid mode)	(initial value)
1	Address output (A4) (PC4 in single chip mode)	

Bit 3—PC3 Mode (PC3MD): Selects the function of the PC3/A3 pin.

Bit 3 PC3MD	Description	
0	General input/output (PC3) (A3 in on-chip ROM invalid mode)	(initial value)
1	Address output (A3) (PC3 in single chip mode)	

Bit 2—PC2 Mode (PC2MD): Selects the function of the PC2/A2 pin.

Bit 2 PC2MD	Description	
0	General input/output (PC2) (A2 in on-chip ROM invalid mode)	(initial value)
1	Address output (A2) (PC2 in single chip mode)	

Bit 1—PC1 Mode (PC1MD): Selects the function of the PC1/A1 pin.

Bit 1 PC1MD	Description	
0	General input/output (PC1) (A1 in on-chip ROM invalid mode)	(initial value)
1	Address output (A1) (PC1 in single chip mode)	

Bit 0—PC0 Mode (PC0MD): Selects the function of the PC0/A0 pin.

Bit 0 PC0MD	Description	
0	General input/output (PC0) (A0 in on-chip ROM invalid mode)	(initial value)
1	Address output (A0) (PC0 in single chip mode)	

16.3.7 Port D I/O Register L (PDIORL) — SH7016, SH7017 —

Bit:	15	14	13	12	11	10	9	8
	PD15 IOR	PD14 IOR	PD13 IOR	PD12 IOR	PD11 IOR	PD10 IOR	PD9 IOR	PD8 IOR
Initial value:	0	0	0	0	0	0	0	0
R/W:	R/W	R/W	R/W	R/W	R/W	R/W	R/W	R/W

Bit:	7	6	5	4	3	2	1	0
	PD7 IOR	PD6 IOR	PD5 IOR	PD4 IOR	PD3 IOR	PD2 IOR	PD1 IOR	PD0 IOR
Initial value:	0	0	0	0	0	0	0	0
R/W:	R/W	R/W	R/W	R/W	R/W	R/W	R/W	R/W

The port D I/O register L (PDIORL) is a 16-bit read/write register that selects input or output for the sixteen port D pins. Bits PD15IOR to PD0IOR correspond to the PD15/D15 pin to PD0/D0 pin. PDIORL is enabled when the port D pins function as general input/outputs (PD15 to PD0). For other functions, it is disabled.

For port D pin functions PD15 to PD0, a given pin in port D is an output pin if its corresponding PDIORL bit is set to 1, and an input pin if the bit is cleared to 0.

PDIORL is initialized to H'0000 by external power-on reset; however, it is not initialized for reset by WDT, standby mode, or sleep mode, so the previous data is maintained.

The settings in this register are functional only in the SH7016 and SH7017. In the SH7014, there are no pins corresponding to this register, and it should not be read or written to.

16.3.8 Port D Control Register L (PDCRL) — SH7016, SH7017 —

Bit:	15	14	13	12	11	10	9	8
	PD15 MD	PD14 MD	PD13 MD	PD12 MD	PD11 MD	PD10 MD	PD9 MD	PD8 MD
Initial value:	0	0	0	0	0	0	0	0
R/W:	R/W	R/W	R/W	R/W	R/W	R/W	R/W	R/W

Bit:	7	6	5	4	3	2	1	0
	PD7 MD	PD6 MD	PD5 MD	PD4 MD	PD3 MD	PD2 MD	PD1 MD	PD0 MD
Initial value:	0	0	0	0	0	0	0	0
R/W:	R/W	R/W	R/W	R/W	R/W	R/W	R/W	R/W

PDCRL is a 16-bit read/write register that selects the multiplexed pin functions for the least significant sixteen port D pins. There are instances when these register settings will be ignored, depending on the operation mode.

On-Chip ROM-Disabled Extended Mode:

— Mode 0 (8-bit bus): Port D pins are data I/O pins; PDCRL settings are disabled.
— Mode 1 (16-bit bus): Port D pins are data I/O pins; PDCRL settings are disabled.

On-Chip ROM-Enabled Extended Mode: The port D pins are shared as data I/O pins and general I/O pins; PDCRL settings are enabled.

Single Chip Mode: The port D pins are general I/O pins; PDCRL settings are disabled.

PDCRL is initialized to H'0000 by external power-on reset but is not initialized for reset by WDT, standby mode, or sleep mode, so the previous data is maintained.

The settings in this register are functional only in the SH7016 and SH7017. In the SH7014, there are no pins corresponding to this register, and it should not be read or written to.

Bit 15—PD15 Mode (PD15MD): Selects the function of the PD15/D15 pin.

Bit 15 PD15MD	Description	
0	General input/output (PD15) (D15 in on-chip ROM invalid mode)	(initial value)
1	Data input/output (D15) (PD15 in single chip mode)	

Bit 14—PD14 Mode (PD14MD): Selects the function of the PD14/D14 pin.

Bit 14 PD14MD	Description	
0	General input/output (PD14) (D14 in on-chip ROM invalid mode)	(initial value)
1	Data input/output (D14) (PD14 in single chip mode)	

Bit 13—PD13 Mode (PD13MD): Selects the function of the PD13/D13 pin.

Bit 13 PD13MD	Description	
0	General input/output (PD13) (D13 in on-chip ROM invalid mode)	(initial value)
1	Data input/output (D13) (PD13 in single chip mode)	

Bit 12—PD12 Mode (PD12MD): Selects the function of the PD12/D12 pin.

Bit 12 PD12MD	Description	
0	General input/output (PD12) (D12 in on-chip ROM invalid mode)	(initial value)
1	Data input/output (D12) (PD12 in single chip mode)	

Bit 11—PD11 Mode (PD11MD): Selects the function of the PD11/D11 pin.

Bit 11 PD11MD	Description	
0	General input/output (PD11) (D11 in on-chip ROM invalid mode)	(initial value)
1	Data input/output (D11) (PD11 in single chip mode)	

Bit 10—PD10 Mode (PD10MD): Selects the function of the PD10/D10 pin.

Bit 10 PD10MD	Description	
0	General input/output (PD10) (D10 in on-chip ROM invalid mode)	(initial value)
1	Data input/output (D10) (PD10 in single chip mode)	

Bit 9—PD9 Mode (PD9MD): Selects the function of the PD9/D9 pin.

Bit 9 PD9MD	Description	
0	General input/output (PD9) (D9 in on-chip ROM invalid mode)	(initial value)
1	Data input/output (D9) (PD9 in single chip mode)	

Bit 8—PD8 Mode (PD8MD): Selects the function of the PD8/D8 pin.

Bit 8 PD8MD	Description	
0	General input/output (PD8) (D8 in on-chip ROM invalid mode)	(initial value)
1	Data input/output (D8) (PD8 in single chip mode)	

Bit 7—PD7 Mode (PD7MD): Selects the function of the PD7/D7 pin.

Bit 7 PD7MD	Description	
0	General input/output (PD7) (D7 in on-chip ROM invalid mode)	(initial value)
1	Data input/output (D7) (PD7 in single chip mode)	

Bit 6—PD6 Mode (PD6MD): Selects the function of the PD6/D6 pin.

Bit 6 PD6MD	Description	
0	General input/output (PD6) (D6 in on-chip ROM invalid mode)	(initial value)
1	Data input/output (D6) (PD6 in single chip mode)	

Bit 5—PD5 Mode (PD5MD): Selects the function of the PD5/D5 pin.

Bit 5 PD5MD	Description	
0	General input/output (PD5) (D5 in on-chip ROM invalid mode)	(initial value)
1	Data input/output (D5) (PD5 in single chip mode)	

Bit 4—PD4 Mode (PD4MD): Selects the function of the PD4/D4 pin.

Bit 4 PD4MD	Description	
0	General input/output (PD4) (D4 in on-chip ROM invalid mode)	(initial value)
1	Data input/output (D4) (PD4 in single chip mode)	

Bit 3—PD3 Mode (PD3MD): Selects the function of the PD3/D3 pin.

Bit 3 PD3MD	Description	
0	General input/output (PD3) (D3 in on-chip ROM invalid mode)	(initial value)
1	Data input/output (D3) (PD3 in single chip mode)	

Bit 2—PD2 Mode (PD2MD): Selects the function of the PD2/D2 pin.

Bit 2 PD2MD	Description	
0	General input/output (PD2) (D2 in on-chip ROM invalid mode)	(initial value)
1	Data input/output (D2) (PD2 in single chip mode)	

Bit 1—PD1 Mode (PD1MD): Selects the function of the PD1/D1 pin.

Bit 1 PD1MD	Description	
0	General input/output (PD1) (D1 in on-chip ROM invalid mode)	(initial value)
1	Data input/output (D1) (PD1 in single chip mode)	

Bit 0—PD0 Mode (PD0MD): Selects the function of the PD0/D0 pin.

Bit 0 PD0MD	Description	
0	General input/output (PD0) (D0 in on-chip ROM invalid mode)	(initial value)
1	Data input/output (D0) (PD0 in single chip mode)	

16.3.9 Port E I/O Register (PEIOR)

The port E I/O register (PEIOR) is a 16-bit read/write register that selects input or output for the 16 port E pins. Bits PE15IOR to PE0IOR correspond to pins PE15/DACK1 to PE0/TIOC0A/$\overline{\text{DREQ0}}$. PEIOR is enabled when the port E pins function as general input/outputs (PE15 to PE0) or TIOC pin of the MTU. For other functions, it is disabled.

When the port E pin functions are as PE15 to PE0, or TIOC pin of the MTU, a given pin in port E is an output pin if its corresponding PEIOR bit is set to 1, and an input pin if the bit is cleared to 0.

PEIOR is initialized to H'0000 by external power-on reset; however, it is not initialized for reset by WDT, standby mode, or sleep mode, so the previous data is maintained.

Bit:	15	14	13	12	11	10	9	8
	PE15 IOR	PE14 IOR	PE13 IOR	PE12 IOR	PE11 IOR	PE10 IOR	PE9 IOR	PE8 IOR
Initial value:	0	0	0	0	0	0	0	0
R/W:	R/W	R/W	R/W	R/W	R/W	R/W	R/W	R/W

Bit:	7	6	5	4	3	2	1	0
	PE7 IOR	PE6 IOR	PE5 IOR	PE4 IOR	PE3 IOR	PE2 IOR	PE1 IOR	PE0 IOR
Initial value:	0	0	0	0	0	0	0	0
R/W:	R/W	R/W	R/W	R/W	R/W	R/W	R/W	R/W

16.3.10 Port E Control Registers 1, 2 (PECR1 and PECR2)

PECR1 and PECR2 are 16-bit read/write registers that select the functions of the sixteen multiplexed pins of port E. PECR1 selects the functions of the upper eight bit pins of port E; PECR2 selects the function of the lower eight bit pins of port E.

Port E includes a bus control signal ($\overline{AH}$) and DMAC control signals (DACK1, DACK0, DRAK1, and DRAK0), but in the SH7016 and SH7017, settings in these registers relating to the selection of these pin functions may be invalid in single-chip mode. For details, see table 16.3, Pin Functions in Each Operating Mode.

PECR1 and PECR2 are both initialized to H'0000 by external power-on reset but are not initialized for reset by WDT, standby mode, or sleep mode, so the previous data is maintained.

Port E Control Register 1 (PECR1):

Bit:	15	14	13	12	11	10	9	8
	PE15 MD1	PE15 MD0	PE14 MD1	PE14 MD0	—	—	—	—
Initial value:	0	0	0	0	0	0	0	0
R/W:	R/W	R/W	R/W	R/W	R	R	R	R

Bit:	7	6	5	4	3	2	1	0
	—	—	—	—	—	—	—	—
Initial value:	0	0	0	0	0	0	0	0
R/W:	R	R	R	R	R	R	R	R

Bits 15 and 14—PE15 Mode 1, 0 (PE15MD1 and PE15MD0): These bits select the function of the PE15/DACK1 pin.

Bit 15 PE15MD1	Bit 14 PE15MD0	Description	
0	0	Input/output (PE15)	(initial value)
	1	Reserved	
1	0	DMA request received output (DACK1) (PE15 in single-chip mode)	
	1	Reserved	

Bits 13 and 12—PE14 Mode 1, 0 (PE14MD1 and PE14MD0): These bits select the function of the PE14/DACK0/$\overline{\text{AH}}$ pin.

Bit 13 PE14MD1	Bit 12 PE14MD0	Description	
0	0	Input/output (PE14)	(initial value)
	1	Reserved	
1	0	DMA request received output (DACK0) (PE14 in single-chip mode)	
	1	Address hold output ($\overline{\text{AH}}$) (PE14 in single-chip mode)	

Bits 11 to 0—Reserved: These bits always reads as 0. The write values should always be 0.

Port E Control Register 2 (PECR2):

Bit:	15	14	13	12	11	10	9	8
	—	PE7MD	—	PE6MD	—	PE5MD	—	PE4MD
Initial value:	0	0	0	0	0	0	0	0
R/W:	R	R/W	R	R/W	R	R/W	R	R/W

Bit:	7	6	5	4	3	2	1	0
	PE3 MD1	PE3 MD0	PE2 MD1	PE2 MD0	PE1 MD1	PE1 MD0	PE0 MD1	PE0 MD0
Initial value:	0	0	0	0	0	0	0	0
R/W:	R/W	R/W	R/W	R/W	R/W	R/W	R/W	R/W

Bit 15—Reserved: This bit always reads as 0. The write value should always be 0.

Bit 14—PE7 Mode (PE7MD): Selects the function of the PE7/TIOC2B pin.

Bit 14 PE7MD	Description	
0	General input/output (PE7)	(initial value)
1	MTU input capture input/output compare output (TIOC2B)	

Bit 13 —Reserved: This bit always reads as 0. The write value should always be 0.

Bit 12—PE6 Mode (PE6MD): Selects the function of the PE6/TIOC2A pin.

Bit 12 PE6MD	Description	
0	General input/output (PE6)	(initial value)
1	MTU input capture input/output compare output (TIOC2A)	

Bit 11—Reserved: This bit always reads as 0. The write value should always be 0.

Bit 10—PE5 Mode (PE5MD): Selects the function of the PE5/TIOC1B pin.

Bit 10 PE5MD	Description	
0	General input/output (PE5)	(initial value)
1	MTU input capture input/output compare output (TIOC1B)	

Bit 9—Reserved: This bit always reads as 0. The write value should always be 0.

Bit 8—PE4 Mode (PE4MD): Selects the function of the PE4/TIOC1A pin.

Bit 8 PE4MD	Description	
0	General input/output (PE4)	(initial value)
1	MTU input capture input/output compare output (TIOC1A)	

Bits 7 and 6—PE3 Mode 1, 0 (PE3MD1 and PE3MD0): These bits select the function of the PE3/TIOC0D/DRAK1 pin.

Bit 7 PE3MD1	Bit 6 PE3MD0	Description	
0	0	General input/output (PE3)	(initial value)
	1	MTU input capture input/output compare output (TIOC0D)	
1	0	$\overline{\text{DREQ1}}$ request received output (DRAK1) (PE3 in single-chip mode)	
	1	Reserved	

Bits 5 and 4—PE2 Mode 1, 0 (PE2MD1 and PE2MD0): These bits select the function of the PE2/TIOC0C/$\overline{\text{DREQ1}}$ pin.

Bit 5 PE2MD1	Bit 4 PE2MD0	Description	
0	0	General input/output (PE2)	(initial value)
	1	MTU input capture input/output compare output (TIOC0C)	
1	0	$\overline{\text{DREQ1}}$ request receive input (PE2 in single-chip mode)	
	1	Reserved	

Bits 3 and 2—PE1 Mode 1, 0 (PE1MD1 and PE1MD0): These bits select the function of the PE1/TIOC0B/DRAK0 pin.

Bit 3 PE1MD1	Bit 2 PE1MD0	Description	
0	0	General input/output (PE1)	(initial value)
	1	MTU input capture input/output compare output (TIOC0B)	
1	0	$\overline{\text{DREQ0}}$ request received output (DRAK0) (PE1 in single-chip mode)	
	1	Reserved	

Bits 1 and 0—PE0 Mode 1, 0 (PE0MD1 and PE0MD0): These bits select the function of the PE0/TIOC0A/$\overline{\text{DREQ0}}$ pin.

Bit 1 PE0MD1	Bit 0 PE0MD0	Description	
0	0	General input/output (PE0)	(initial value)
	1	MTU input capture input/output compare output (TIOC0A)	
1	0	$\overline{\text{DREQ0}}$ request receive input (PE0 in single-chip mode)	
	1	Reserved	

Section 17 I/O Ports (I/O)

17.1 Overview

The SH7016 and SH7017 have six ports, A to F, and the SH7014 has four ports, A, B, E, and F. The pins of the ports are multiplexed for use as general-purpose I/Os (the port F pins are general input) or for other functions. Use the pin function controller (PFC) to select the function of multiplexed pins. The ports each have one data register for storing pin data. The initialize function after power-on reset differs depending on the operating mode of each pin. See tables 16.2 and 16.3, Pin Arrangement by Mode, for details.

17.2 Port A

Port A is a 16-pin input/output port (11-pin in the SH7014) as shown in table 17.1.

Table 17.1 Port A

ROM Disabled Extended Mode (Modes 0, 1)	ROM Enabled Extended Mode (Mode 2)*	Single Chip Mode*
PA15 (I/O)/CK (output)	PA15 (I/O)/CK (output)	PA15 (I/O)/CK (output)
$\overline{\text{RD}}$ (output)	PA14 (I/O)/$\overline{\text{RD}}$ (output)	PA14 (I/O)
$\overline{\text{WRH}}$ (output)	PA13 (I/O)/$\overline{\text{WRH}}$ (output)	PA13 (I/O)
$\overline{\text{WRL}}$ (output)	PA12 (I/O)/$\overline{\text{WRL}}$ (output)	PA12 (I/O)
$\overline{\text{CS1}}$ (output)	PA11 (I/O)/$\overline{\text{CS1}}$ (output)	PA11 (I/O)
$\overline{\text{CS0}}$ (output)	PA10 (I/O)/$\overline{\text{CS0}}$ (output)	PA10 (I/O)
PA9 (I/O)/TCLKD (input)/$\overline{\text{IRQ3}}$ (input)	PA9 (I/O)/TCLKD (input)/ $\overline{\text{IRQ3}}$ (input)	PA9 (I/O)/TCLKD (input)/$\overline{\text{IRQ3}}$ (input)
PA8 (I/O)/TCLKC (input)/$\overline{\text{IRQ2}}$ (input)	PA8 (I/O)/TCLKC (input)/ $\overline{\text{IRQ2}}$ (input)	PA8 (I/O)/TCLKC (input)/$\overline{\text{IRQ2}}$ (input)
PA7 (I/O)/TCLKB (input)/ $\overline{\text{CS3}}$ (input)	PA7 (I/O)/TCLKB (input)/ $\overline{\text{CS3}}$ (input)	PA7 (I/O)/TCLKB (input)
PA6 (I/O)/TCLKA (input)/ $\overline{\text{CS2}}$ (input)	PA6 (I/O)/TCLKA (input)/ $\overline{\text{CS2}}$ (input)	PA6 (I/O)/TCLKA (input)
PA5 (I/O)/SCK1 (I/O)/ $\overline{\text{DREQ1}}$ (input)/$\overline{\text{IRQ1}}$ (input)	PA5 (I/O)/SCK1 (I/O)/ $\overline{\text{DREQ1}}$ (input)/$\overline{\text{IRQ1}}$ (input)	PA5 (I/O)/SCK1 (I/O)/ $\overline{\text{IRQ1}}$ (input)
PA4 (I/O)/TXD1 (output)	PA4 (I/O)/TXD1 (output)	PA4 (I/O)/TXD1 (output)
PA3 (I/O)/RXD1 (input)	PA3 (I/O)/RXD1 (input)	PA3 (I/O)/RXD1 (input)
PA2 (I/O)/SCK0 (I/O)/ $\overline{\text{DREQ0}}$ (input)/$\overline{\text{IRQ0}}$ (input)	PA2 (I/O)/SCK0 (I/O)/ $\overline{\text{DREQ0}}$ (input)/$\overline{\text{IRQ0}}$ (input)	PA2 (I/O)/SCK0 (I/O)/ $\overline{\text{IRQ0}}$ (input)
PA1 (I/O)/TXD0 (output)	PA1 (I/O)/TXD0 (output)	PA1 (I/O)/TXD0 (output)
PA0 (I/O)/RXD0 (input)	PA0 (I/O)/RXD0 (input)	PA0 (I/O)/RXD0 (input)

Note: * SH7016, SH7017 only.

17.2.1 Register Configuration

Table 17.2 summarizes the port A register.

Table 17.2 Port A Register

Name	Abbreviation	R/W	Initial Value	Address	Access Size
Port A data register L	PADRL	R/W	H'0000	H'FFFF8382 H'FFFF8383	8, 16, 32

17.2.2 Port A Data Register L (PADRL)

Bit:	15	14	13	12	11	10	9	8
	PA15DR	PA14DR	PA13DR	PA12DR	PA11DR	PA10DR	PA9DR	PA8DR
Initial value:	0	0	0	0	0	0	0	0
R/W:	R/W	R/W*	R/W*	R/W*	R/W*	R/W*	R/W	R/W

Bit:	7	6	5	4	3	2	1	0
	PA7DR	PA6DR	PA5DR	PA4DR	PA3DR	PA2DR	PA1DR	PA0DR
Initial value:	0	0	0	0	0	0	0	0
R/W:	R/W	R/W	R/W	R/W	R/W	R/W	R/W	R/W

Note: * R only in the SH7014.

PADRL is a 16-bit read/write register that stores data for port A. The bits PA15DR to PA0DR correspond to the PA15/CK to PA0/RXD0 pins. When the pins are used as ordinary outputs, they will output whatever value is written in the PADRL; when PADRL is read, the register value will be output regardless of the pin status. When the pins are used as ordinary inputs, the pin status rather than the register value is read directly when PADRL is read. When a value is written to PADRL, that value can be written into PADRL, but it will not affect the pin status. Table 17.3 shows the read/write operations of the port A data register.

PADRL is initialized by an external power-on reset. However, PADRL is not initialized for a reset by WDT, standby mode, or sleep mode.

The settings of bits 14 to 10 of this register are functional only in the SH7016 and SH7017. In the SH7014, there are no pins corresponding to bits 14 to 10; these bits are always read as 0, and their write value should always be 0.

Table 17.3 Read/Write Operation of the Port A Data Register (PADR)

PAIOR	Pin Status	Read	Write
0	Ordinary input	Pin status	Can write to PADR, but it has no effect on pin status
	Other function	Pin status	Can write to PADR, but it has no effect on pin status
1	Ordinary output	PADR value	Value written is output by pin
	Other function	PADR value	Can write to PADR, but it has no effect on pin status

17.3 Port B

Port B is a 10-pin input/output port (8-pin in the SH7014) as shown in table 17.4.

Table 17.4 Port B

ROM Disabled Extended Mode (Modes 0, 1)	ROM Enabled Extended Mode (Mode 2)*	Single Chip Mode*
PB9 (I/O)/$\overline{\text{IRQ7}}$ (input)/ A21 (output)	PB9 (I/O)/$\overline{\text{IRQ7}}$ (input)/ A21 (output)	PB9 (I/O)/$\overline{\text{IRQ7}}$ (input)
PB8 (I/O)/$\overline{\text{IRQ6}}$ (input)/ A20 (output)/$\overline{\text{WAIT}}$ (input)	PB8 (I/O)/$\overline{\text{IRQ6}}$ (input)/ A20 (output)/$\overline{\text{WAIT}}$ (input)	PB8 (I/O)/$\overline{\text{IRQ6}}$ (input)
PB7 (I/O)/A19 (output)	PB7 (I/O)/A19 (output)	PB7 (I/O)
PB6 (I/O)/A18 (output)	PB6 (I/O)/A18 (output)	PB6 (I/O)
PB5 (I/O)/$\overline{\text{IRQ3}}$ (input)/RDWR (output)	PB5 (I/O)/$\overline{\text{IRQ3}}$ (input)/ RDWR (output)	PB5 (I/O)/$\overline{\text{IRQ3}}$ (input)
PB4 (I/O)/$\overline{\text{IRQ2}}$ (input)/ $\overline{\text{CASH}}$ (output)	PB4 (I/O)/$\overline{\text{IRQ2}}$ (input)/ $\overline{\text{CASH}}$ (output)	PB4 (I/O)/$\overline{\text{IRQ2}}$ (input)
PB3 (I/O)/$\overline{\text{IRQ1}}$ (input)/ $\overline{\text{CASL}}$ (output)	PB3 (I/O)/$\overline{\text{IRQ1}}$ (input)/ $\overline{\text{CASL}}$ (output)	PB3 (I/O)/$\overline{\text{IRQ1}}$ (input)
PB2 (I/O)/$\overline{\text{IRQ0}}$ (input)/ $\overline{\text{RAS}}$ (output)	PB2 (I/O)/$\overline{\text{IRQ0}}$ (input)/ $\overline{\text{RAS}}$ (output)	PB2 (I/O)/$\overline{\text{IRQ0}}$ (input)
A17 (output)	PB1 (I/O)/A17 (output)	PB1 (I/O)
A16 (output)	PB0 (I/O)/A16 (output)	PB0 (I/O)

Note: * SH7016 and SH7017 only.

17.3.1 Register Configuration

Table 17.5 summarizes the port B register.

Table 17.5 Port B Register

Name	Abbreviation	R/W	Initial Value	Address	Access Size
Port B data register	PBDR	R/W	H'0000	H'FFFF8390 H'FFFF8391	8, 16, 32

17.3.2 Port B Data Register (PBDR)

Bit:	15	14	13	12	11	10	9	8
	—	—	—	—	—	—	PB9DR	PB8DR
Initial value:	0	0	0	0	0	0	0	0
R/W:	R	R	R	R	R	R	R/W	R/W

Bit:	7	6	5	4	3	2	1	0
	PB7DR	PB6DR	PB5DR	PB4DR	PB3DR	PB2DR	PB1DR	PB0DR
Initial value:	0	0	0	0	0	0	0	0
R/W:	R/W	R/W	R/W	R/W	R/W	R/W	R/W*	R/W*

Note: * R only in the SH7014.

PBDR is a 16-bit read/write register that stores data for port B. The bits PB9DR to PB0DR correspond to the PB9/$\overline{\text{IRQ7}}$/A21 to PB0/A16 pins. When the pins are used as ordinary outputs, they will output whatever value is written in the PBDR; when PBDR is read, the register value will be read regardless of the pin status. When the pins are used as ordinary inputs, the pin status rather than the register value is read directly when PBDR is read. When a value is written to PBDR, that value can be written into PBDR, but it will not affect the pin status. table 17.6 shows the read/write operations of the port B data register.

PBDR is initialized by an external power-on reset. However, PBDR is not initialized for a reset by WDT, standby mode, or sleep mode.

The settings of bits 1 and 0 of this register are functional only in the SH7016 and SH7017. In the SH7014, there are no pins corresponding to these bits; they are always read as 0, and their write value should always be 0.

Table 17.6 Read/Write Operation of the Port B Data Register (PBDR)

PBIOR	Pin Status	Read	Write
0	Ordinary input	Pin status	Can write to PBDR, but it has no effect on pin status
	Other function	Pin status	Can write to PBDR, but it has no effect on pin status
1	Ordinary output	PBDR value	Value written is output by pin
	Other function	PBDR value	Can write to PBDR, but it has no effect on pin status

17.4 Port C — SH7016, SH7017 —

Port C is a 16 pin input/output port as listed in table 17.7. There is no port C in the SH7014.

Table 17.7 Port C

ROM Disabled Extended Mode (Modes 0, 1)	ROM Enabled Extended Mode (Mode 2)	Single Chip Mode
A15 (output)	PC15 (I/O)/A15 (output)	PC15 (I/O)
A14 (output)	PC14 (I/O)/A14 (output)	PC14 (I/O)
A13 (output)	PC13 (I/O)/A13 (output)	PC13 (I/O)
A12 (output)	PC12 (I/O)/A12 (output)	PC12 (I/O)
A11 (output)	PC11 (I/O)/A11 (output)	PC11 (I/O)
A10 (output)	PC10 (I/O)/A10 (output)	PC10 (I/O)
A9 (output)	PC9 (I/O)/A9 (output)	PC9 (I/O)
A8 (output)	PC8 (I/O)/A8 (output)	PC8 (I/O)
A7 (output)	PC7 (I/O)/A7 (output)	PC7 (I/O)
A6 (output)	PC6 (I/O)/A6 (output)	PC6 (I/O)
A5 (output)	PC5 (I/O)/A5 (output)	PC5 (I/O)
A4 (output)	PC4 (I/O)/A4 (output)	PC4 (I/O)
A3 (output)	PC3 (I/O)/A3 (output)	PC3 (I/O)
A2 (output)	PC2 (I/O)/A2 (output)	PC2 (I/O)
A1 (output)	PC1 (I/O)/A1 (output)	PC1 (I/O)
A0 (output)	PC0 (I/O)/A0 (output)	PC0 (I/O)

17.4.1 Register Configuration

Table 17.8 summarizes the port C register.

Table 17.8 Port C Register

Name	Abbreviation	R/W	Initial Value	Address	Access Size
Port C data register	PCDR	R/W	H'0000	H'FFFF8392 H'FFFF8393	8, 16, 32

17.4.2 Port C Data Register (PCDR)

Bit:	15	14	13	12	11	10	9	8
	PC15DR	PC14DR	PC13DR	PC12DR	PC11DR	PC10DR	PC9DR	PC8DR
Initial value:	0	0	0	0	0	0	0	0
R/W:	R/W	R/W	R/W	R/W	R/W	R/W	R/W	R/W

Bit:	7	6	5	4	3	2	1	0
	PC7DR	PC6DR	PC5DR	PC4DR	PC3DR	PC2DR	PC1DR	PC0DR
Initial value:	0	0	0	0	0	0	0	0
R/W:	R/W	R/W	R/W	R/W	R/W	R/W	R/W	R/W

PCDR is a 16-bit read/write register that stores data for port C. The bits PC15DR to PC0DR correspond to the PC15/A15 to PC0/A0 pins. When the pins are used as ordinary outputs, they will output whatever value is written in the PCDR; when PCDR is read, the register value will be read regardless of the pin status. When the pins are used as ordinary inputs, the pin status rather than the register value is read directly when PCDR is read. When a value is written to PCDR, that value can be written into PCDR, but it will not affect the pin status. Table 17.9 shows the read/write operations of the port C data register.

PCDR is initialized by an external power-on reset. However, PCDR is not initialized for a reset by WDT, standby mode, or sleep mode.

The settings in this register are functional only in the SH7016 and SH7017. In the SH7014, there are no pins corresponding to this register, and it should not be read or written to.

Table 17.9 Read/Write Operation of the Port C Data Register (PCDR)

PCIOR	Pin Status	Read	Write
0	Ordinary input	Pin status	Can write to PCDR, but it has no effect on pin status
	Other function	Pin status	Can write to PCDR, but it has no effect on pin status
1	Ordinary output	PCDR value	Value written is output by pin
	Other function	PCDR value	Can write to PCDR, but it has no effect on pin status

17.5 Port D — SH7016, SH7017 —

Port D is a 16-pin input/output port, as shown in table 17.10. There is no port D in the SH7014.

Table 17.10 Port D

Extended Mode Without ROM (Mode 0)	Extended Mode Without ROM (Mode 1)	Extended Mode With ROM (Mode 2)	Single Chip Mode
D15 (I/O)	D15 (I/O)	PD15 (I/O)/D15 (I/O)	PD15 (I/O)
D14 (I/O)	D14 (I/O)	PD14 (I/O)/D14 (I/O)	PD14 (I/O)
D13 (I/O)	D13 (I/O)	PD13 (I/O)/D13 (I/O)	PD13 (I/O)
D12 (I/O)	D12 (I/O)	PD12 (I/O)/D12 (I/O)	PD12 (I/O)
D11 (I/O)	D11 (I/O)	PD11 (I/O)/D11 (I/O)	PD11 (I/O)
D10 (I/O)	D10 (I/O)	PD10 (I/O)/D10 (I/O)	PD10 (I/O)
D9 (I/O)	D9 (I/O)	PD9 (I/O)/D9 (I/O)	PD9 (I/O)
D8 (I/O)	D8 (I/O)	PD8 (I/O)/D8 (I/O)	PD8 (I/O)
D7 (I/O)	D7 (I/O)	PD7 (I/O)/D7 (I/O)	PD7 (I/O)
D6 (I/O)	D6 (I/O)	PD6 (I/O)/D6 (I/O)	PD6 (I/O)
D5 (I/O)	D5 (I/O)	PD5 (I/O)/D5 (I/O)	PD5 (I/O)
D4 (I/O)	D4 (I/O)	PD4 (I/O)/D4 (I/O)	PD4 (I/O)
D3 (I/O)	D3 (I/O)	PD3 (I/O)/D3 (I/O)	PD3 (I/O)
D2 (I/O)	D2 (I/O)	PD2 (I/O)/D2 (I/O)	PD2 (I/O)
D1 (I/O)	D1 (I/O)	PD1 (I/O)/D1 (I/O)	PD1 (I/O)
D0 (I/O)	D0 (I/O)	PD0 (I/O)/D0 (I/O)	PD0 (I/O)

17.5.1 Register Configuration

Table 17.11 summarizes the port D register.

Table 17.11 Port D Register

Name	Abbreviation	R/W	Initial Value	Address	Access Size
Port D data register L	PDDRL	R/W	H'0000	H'FFFF83A2 H'FFFF83A3	8, 16, 32

17.5.2 Port D Data Register L (PDDRL)

Bit:	15	14	13	12	11	10	9	8
	PD15DR	PD14DR	PD13DR	PD12DR	PD11DR	PD10DR	PD9DR	PD8DR
Initial value:	0	0	0	0	0	0	0	0
R/W:	R/W	R/W	R/W	R/W	R/W	R/W	R/W	R/W

Bit:	7	6	5	4	3	2	1	0
	PD7DR	PD6DR	PD5DR	PD4DR	PD3DR	PD2DR	PD1DR	PD0DR
Initial value:	0	0	0	0	0	0	0	0
R/W:	R/W	R/W	R/W	R/W	R/W	R/W	R/W	R/W

PDDRL is a 16-bit read/write register that stores data for port D. The bits PD15DR to PD0DR correspond to the PD15/D15 to PD0/D0 pins. When the pins are used as ordinary outputs, they will output whatever value is written in the PDDRL; when PDDRL is read, the register value will be read regardless of the pin status. When the pins are used as ordinary inputs, the pin status rather than the register value is read directly when PDDRL is read. When a value is written to PDDRL, that value can be written into PDDRL, but it will not affect the pin status. Table 17.12 shows the read/write operations of the port D data register.

PDDRL is initialized by an external power-on reset. However, PDDRL is not initialized for a reset by WDT, standby mode, or sleep mode.

The settings in this register are functional only in the SH7016 and SH7017. In the SH7014, there are no pins corresponding to this register, and it should not be read or written to.

Table 17.12 Read/Write Operation of the Port D Data Register (PDDR)

PDIOR	Pin Status	Read	Write
0	Ordinary input	Pin status	Can write to PDDR, but it has no effect on pin status
	Other function	Pin status	Can write to PDDR, but it has no effect on pin status
1	Ordinary output	PDDR value	Value written is output by pin
	Other function	PDDR value	Can write to PDDR, but it has no effect on pin status

17.6 Port E

Port E is a 16-pin input/output port, as listed in table 17.13.

Table 17.13 Port E

Extended Modes (Modes 0, 1, 2)*[1]	Single Chip Mode*[2]
PE15 (I/O)/ DACK1 (output)	PE15 (I/O)
PE14 (I/O)/DACK0 (output)/$\overline{\text{AH}}$ (output)	PE14 (I/O)
PE13 (I/O)	PE13 (I/O)
PE12 (I/O)	PE12 (I/O)
PE11 (I/O)	PE11 (I/O)
PE10 (I/O)	PE10 (I/O)
PE9 (I/O)	PE9 (I/O)
PE8 (I/O)	PE8 (I/O)
PE7 (I/O)/TIOC2B (I/O)	PE7 (I/O)/TIOC2B (I/O)
PE6 (I/O)/TIOC2A (I/O)	PE6 (I/O)/TIOC2A (I/O)
PE5 (I/O)/TIOC1B (I/O)	PE5 (I/O)/TIOC1B (I/O)
PE4 (I/O)/TIOC1A (I/O)	PE4 (I/O)/TIOC1A (I/O)
PE3 (I/O)/TIOC0D (I/O)/DRAK1 (output)	PE3 (I/O)/TIOC0D (I/O)
PE2 (I/O)/TIOC0C (I/O)/$\overline{\text{DREQ1}}$ (input)	PE2 (I/O)/TIOC0C (I/O)
PE1 (I/O)/TIOC0B (I/O)/DRAK0 (output)	PE1 (I/O)/TIOC0B (I/O)
PE0 (I/O)/TIOC0A (I/O)/$\overline{\text{DREQ0}}$ (input)	PE0 (I/O)/TIOC0A (I/O)

Notes: 1. Modes 0 and 1 only in the SH7014.
2. SH7016 and SH7017 only.

17.6.1 Register Configuration

Table 17.14 summarizes the port E register.

Table 17.14 Port E Register

Name	Abbreviation	R/W	Initial Value	Address	Access Size
Port E data register	PEDR	R/W	H'0000	H'FFFF83B0 H'FFFF83B1	8, 16, 32

17.6.2 Port E Data Register (PEDR)

Bit:	15	14	13	12	11	10	9	8
	PE15DR	PE14DR	PE13DR	PE12DR	PE11DR	PE10DR	PE9DR	PE8DR
Initial value:	0	0	0	0	0	0	0	0
R/W:	R/W	R/W	R/W	R/W	R/W	R/W	R/W	R/W

Bit:	7	6	5	4	3	2	1	0
	PE7DR	PE6DR	PE5DR	PE4DR	PE3DR	PE2DR	PE1DR	PE0DR
Initial value:	0	0	0	0	0	0	0	0
R/W:	R/W	R/W	R/W	R/W	R/W	R/W	R/W	R/W

PEDR is a 16-bit read/write register that stores data for port E. The bits PE15DR to PE0DR correspond to the PE15/DACK1 to PE0/TIOC0A/$\overline{\text{DREQ0}}$ pins. When the pins are used as ordinary outputs, they will output whatever value is written in the PEDR; when PEDR is read, the register value will be read regardless of the pin status. When the pins are used as ordinary inputs, the pin status rather than the register value is read directly when PEDR is read. When a value is written to PEDR, that value can be written into PEDR, but it will not affect the pin status. Table 17.15 shows the read/write operations of the port E data register.

PEDR is initialized by a external power-on reset. However, PEDR is not initialized for a reset by WDT, standby mode, or sleep mode, so the previous data is retained.

Table 17.15 Read/Write Operation of the Port E Data Register (PEDR)

PEIOR	Pin Status	Read	Write
0	Ordinary input	Pin status	Can write to PEDR, but it has no effect on pin status
	Other function	Pin status	Can write to PEDR, but it has no effect on pin status
1	Ordinary output	PEDR value	Value written is output by pin
	Other function	PEDR value	Can write to PEDR, but it has no effect on pin status

17.7 Port F

Port F is an 8-pin input port. All modes are configured in the following way:

- PF7 (input)/AN7 (input)
- PF6 (input)/AN6 (input)
- PF5 (input)/AN5 (input)
- PF4 (input)/AN4 (input)
- PF3 (input)/AN3 (input)
- PF2 (input)/AN2 (input)
- PF1 (input)/AN1 (input)
- PF0 (input)/AN0 (input)

17.7.1 Register Configuration

Table 17.16 summarizes the port F register.

Table 17.16 Port F Register

Name	Abbreviation	R/W	Initial Value	Address	Access Size
Port F data register	PFDR	R	External pin dependent	H'FFFF83B3	8

17.7.2 Port F Data Register (PFDR)

Bit:	7	6	5	4	3	2	1	0
	PF7DR	PF6DR	PF5DR	PF4DR	PF3DR	PF2DR	PF1DR	PF0DR
Initial value:	*	*	*	*	*	*	*	*
R/W:	R	R	R	R	R	R	R	R

Note: * Initial values are dependent on the status of the pins at the time of the reads.

PFDR is an 8-bit read-only register that stores data for port F. The bits PF7DR to PF0DR correspond to the PF7/AN7 to PF0/AN0 pins. Any value written into these bits is ignored, and there is no effect on the status of the pins. When any of the bits are read, the pin status rather than the bit value is read directly. However, when an A/D converter analog input is being sampled, values of 1 are read out. Table 17.17 shows the read/write operations of the port F data register.

PFDR is not initialized by power-on resets, standby mode, or sleep mode (the bits always reflect the pin status).

Table 17.17 Read/Write Operation of the Port F Data Register (PFDR)

Pin I/O	Pin Function	Read	Write
Input	Ordinary	Pin status is read	Ignored (no effect on pin status)
	ANn: analog input	1 is read	Ignored (no effect on pin status)

Note: n = 7 to 0

Section 18 128 kB Flash Memory (F-ZTAT)

18.1 Features

The SH7017 has 128 kbytes of on-chip flash memory. The features of the flash memory are summarized below.

- Four flash memory operating modes
  - — Program mode
  - — Erase mode
  - — Program-verify mode
  - — Erase-verify mode
- Programming/erase methods

  The flash memory is programmed 32 bytes at a time. Block erase (in single-block units) can be performed. Erasing the entire memory requires erasure of each block in turn. Block erasing can be performed as required on 1 kB, 28 kB, and 32 kB blocks.
- Programming/erase times

  The flash memory programming time is 10 ms (typ.) for simultaneous 32-byte programming, equivalent to 300 μs (typ.) per byte, and the erase time is 100 ms (typ.) per block.
- Reprogramming capability

  The flash memory can be reprogrammed up to 100 times.
- On-board programming modes

  There are two modes in which flash memory can be programmed/erased/verified on-board:
  - — Boot mode
  - — User program mode
- Automatic bit rate adjustment

  With data transfer in boot mode, the SH7017's bit rate can be automatically adjusted to match the transfer bit rate of the host.
- Flash memory emulation in RAM

  Flash memory programming can be emulated in real time by overlapping a part of RAM onto flash memory.
- Protect modes

  There are two protect modes, hardware and software, which allow protected status to be designated for flash memory program/erase/verify operations
- Programmer mode

  Flash memory can be programmed/erased in programmer mode, using a PROM programmer, as well as in on-board programming mode.

18.2 Overview

18.2.1 Block Diagram

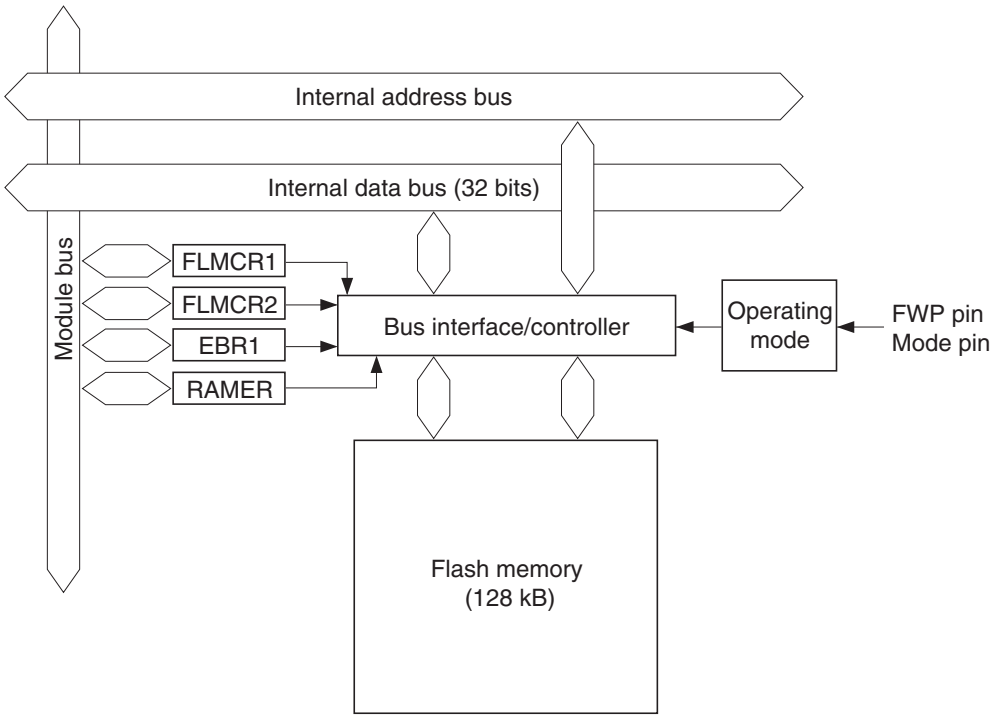

Legend:
FLMCR1: Flash memory control register 1
FLMCR2: Flash memory control register 2
EBR1: Erase block register 1
RAMER: RAM emulation register

Figure 18.1 Block Diagram of Flash Memory

18.2.2 Mode Transitions

When the mode pins and the FWP pin are set in the reset state and a reset-start is executed, the SH7017 enters one of the operating modes shown in figure 18.2. In user mode, flash memory can be read but not programmed or erased.

Flash memory can be programmed and erased in boot mode, user program mode, and programmer mode.

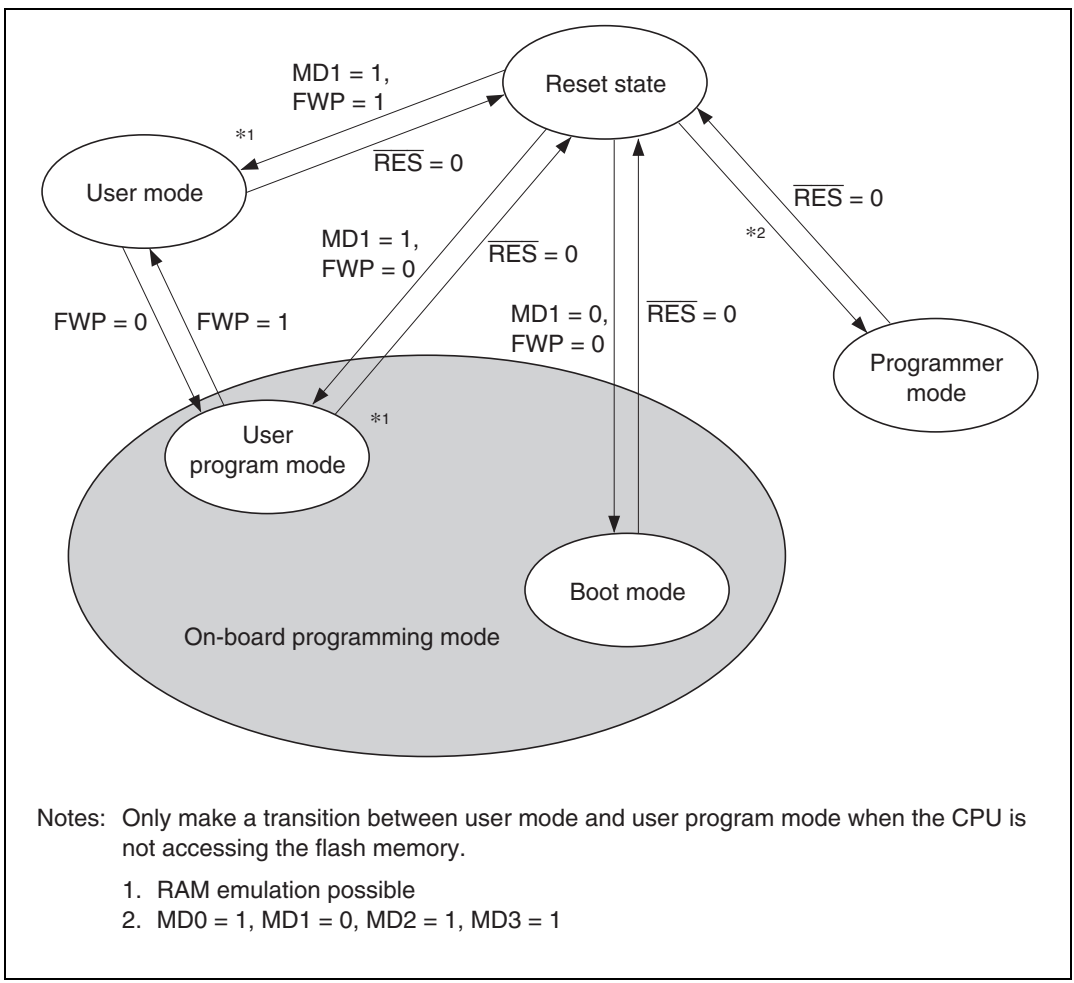

Notes: Only make a transition between user mode and user program mode when the CPU is not accessing the flash memory.

1. RAM emulation possible
2. MD0 = 1, MD1 = 0, MD2 = 1, MD3 = 1

Figure 18.2 Flash Memory Mode Transitions

18.2.3 On-Board Programming Modes

Boot Mode

1. Initial state
   The old program version or data remains written in the flash memory. The user should prepare the programming control program and new application program beforehand in the host.

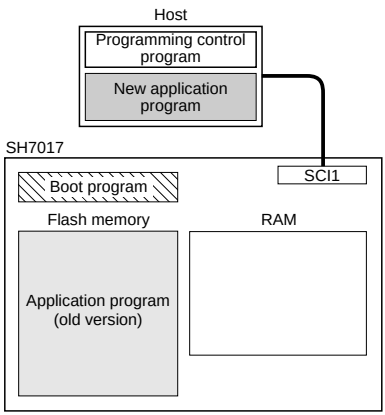

2. Programming control program transfer
   When boot mode is entered, the boot program in the SH7050 (originally incorporated in the chip) is started and the programming control program in the host is transferred to RAM via SCI communication. The boot program required for flash memory erasing is automatically transferred to the RAM boot program area.

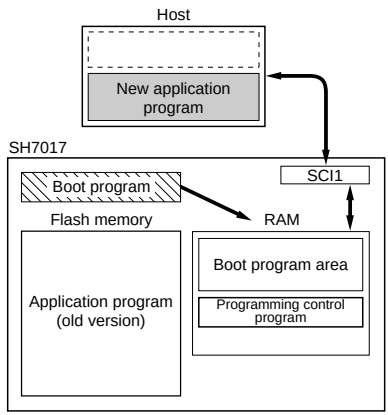

3. Flash memory initialization
   The erase program in the boot program area (in RAM) is executed, and the flash memory is initialized (to H'FF). In boot mode, entire flash memory erasure is performed, without regard to blocks.

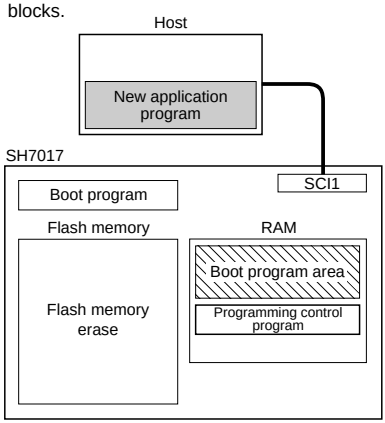

4. Writing new application program
   The programming control program transferred from the host to RAM is executed, and the new application program in the host is written into the flash memory.

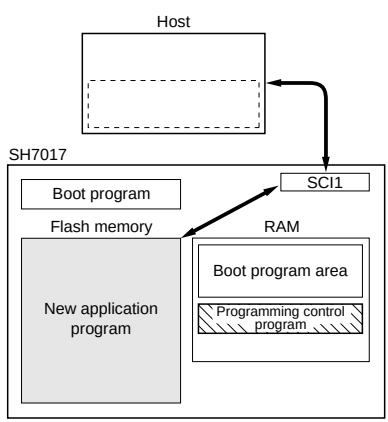

Program execution state

Figure 18.3 Boot Mode

User Program Mode

1. Initial state
   The FWP assessment program that confirms that user program mode has been entered, and the program that will transfer the programming/erase control program from flash memory to on-chip RAM should be written into the flash memory by the user beforehand. The programming/erase control program should be prepared in the host or in the flash memory.

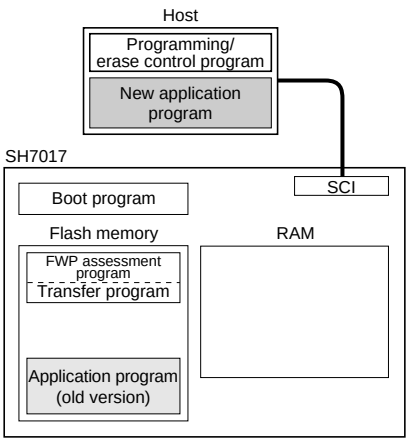

2. Programming/erase control program transfer
   When user program mode is entered, user software confirms this fact, executes transfer program in the flash memory, and transfers the programming/erase control program to RAM.

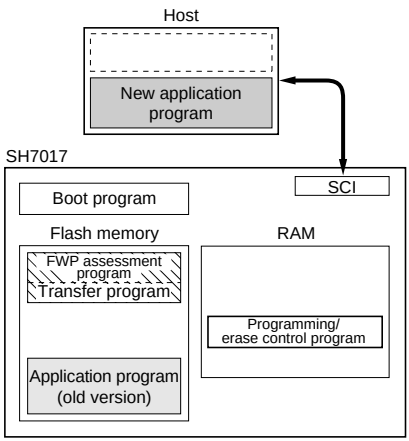

3. Flash memory initialization
   The programming/erase program in RAM is executed, and the flash memory is initialized (to H'FF). Erasing can be performed in block units, but not in byte units.

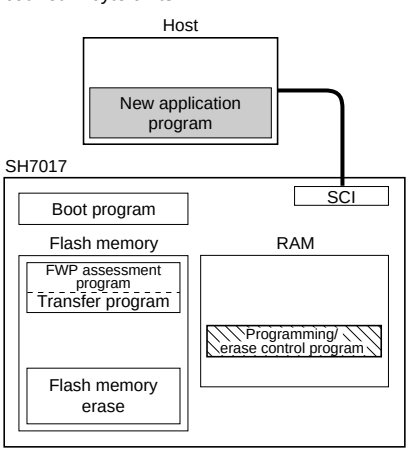

4. Writing new application program
   Next, the new application program in the host is written into the erased flash memory blocks. Do not write to unerased blocks.

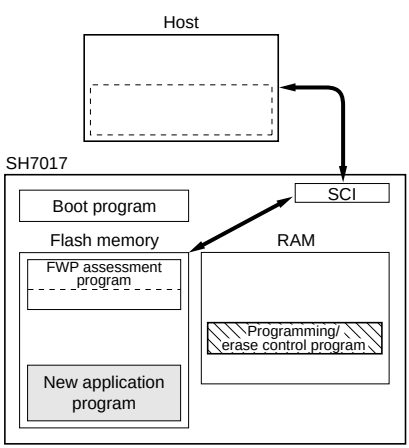

Program execution state

Figure 18.4 User Program Mode

18.2.4 Flash Memory Emulation in RAM

Emulation should be performed in user mode or user program mode. When the emulation block set in RAMER is accessed while the emulation function is being executed, data written in the overlap RAM is read.

- User Mode
- User Program Mode

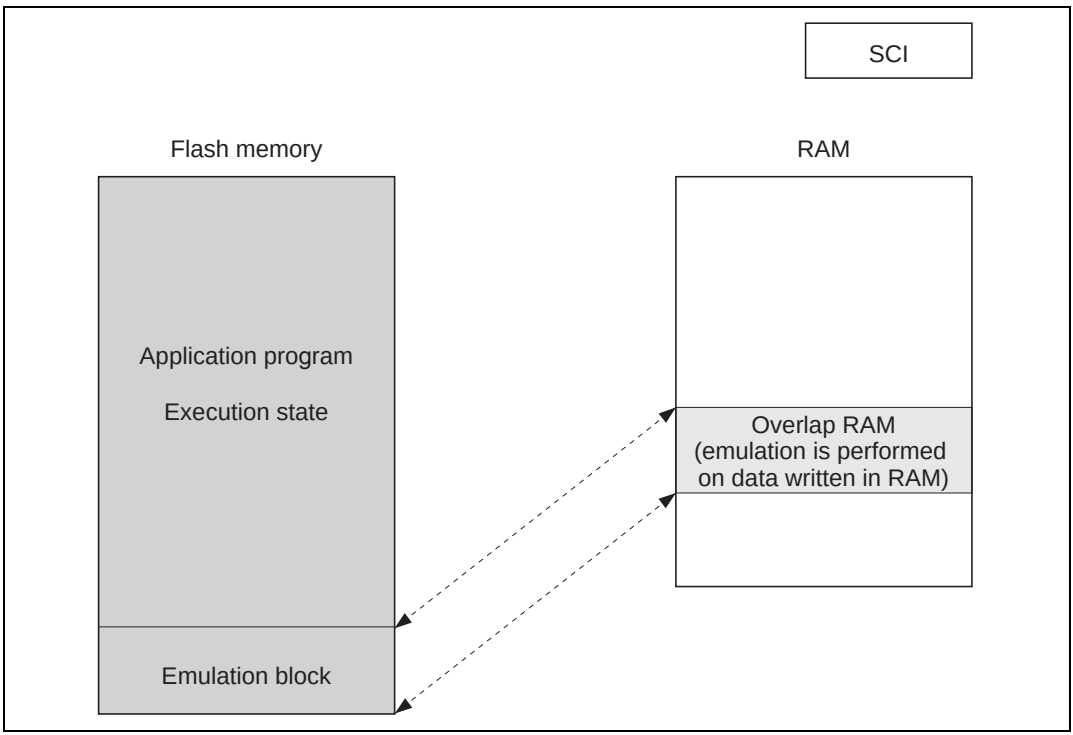

Figure 18.5 Emulation

When overlap RAM data is confirmed, the RAMS bit is cleared, RAM overlap is released, and writes should actually be performed to the flash memory.

When the programming control program is transferred to RAM, ensure that the transfer destination and the overlap RAM do not overlap, as this will cause data in the overlap RAM to be rewritten.

- User Program Mode

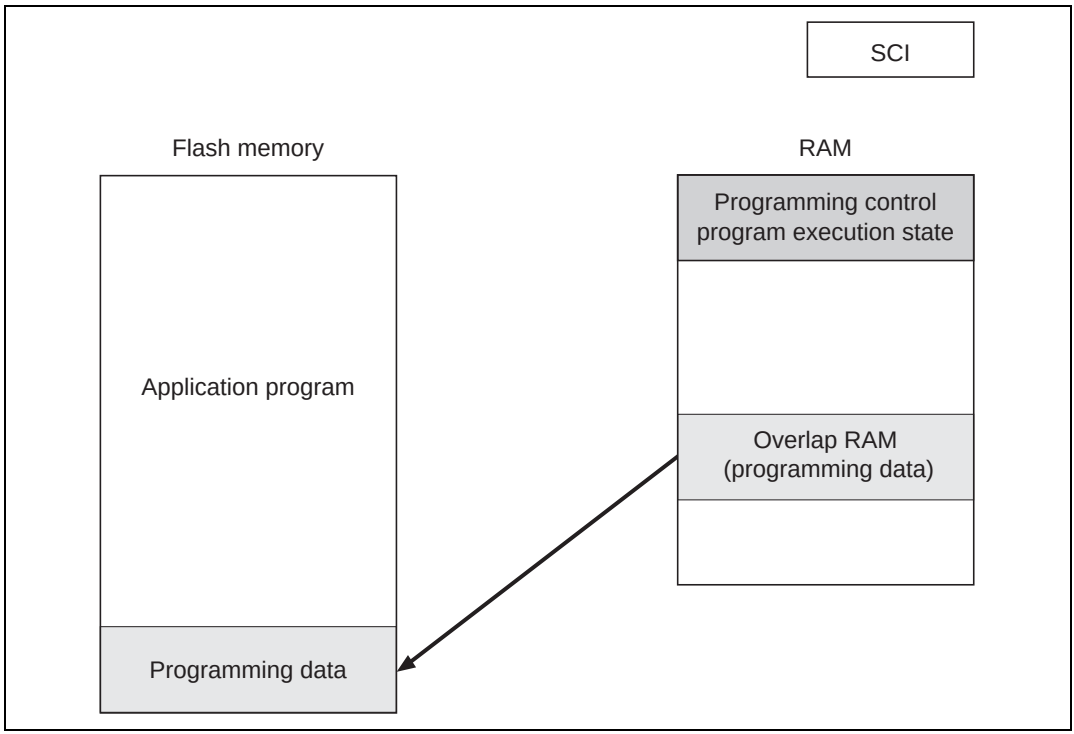

Figure 18.6 Programming to the Flash Memory

18.2.5 Differences between Boot Mode and User Program Mode

Table 18.1 Differences between Boot Mode and User Program Mode

	Boot Mode	User Program Mode
Entire memory erase	Yes	Yes
Block erase	No	Yes
Programming control program*	(2)	(1) (2) (3)

(1) Erase/erase-verify
(2) Program/program-verify
(3) Emulation
Note: * To be provided by the user, in accordance with the recommended algorithm.

18.2.6 Block Configuration

The flash memory is divided into three 32 kB blocks, one 28 kB blocks, and four 1 kB blocks.

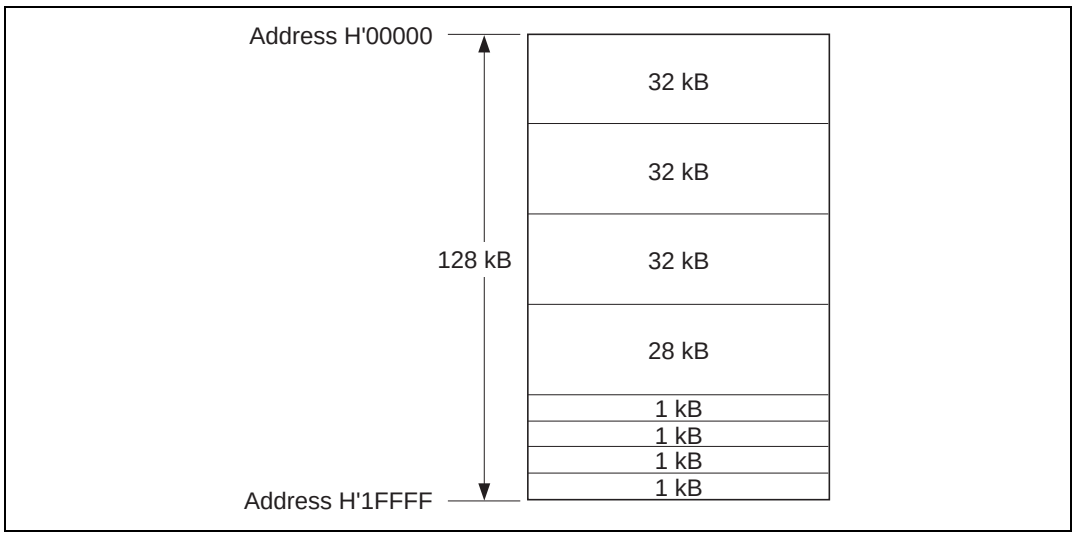

Figure 18.7 Block Configuration

18.3 Pin Configuration

The flash memory is controlled by means of the pins shown in table 18.2.

Table 18.2 Flash Memory Pins

Pin Name	Abbreviation	I/O	Function
Power-on reset	$\overline{\text{RES}}$	Input	Power-on reset
Flash memory protect	FWP	Input	Flash program/erase protection by hardware
Mode 3	MD3	Input	Sets SH7017 operating mode
Mode 2	MD2	Input	Sets SH7017 operating mode
Mode 1	MD1	Input	Sets SH7017 operating mode
Mode 0	MD0	Input	Sets SH7017 operating mode
Transmit data	TxD1	Output	Serial transmit data output
Receive data	RxD1	Input	Serial receive data input

18.4 Register Configuration

The registers used to control the on-chip flash memory when enabled are shown in table 18.3.

Table 18.3 Flash Memory Registers

Register Name	Abbreviation	R/W	Initial Value	Address	Access Size
Flash memory control register 1	FLMCR1	R/W*[1]	H'00*[3]	H'FFFF8580	8
Flash memory control register 2	FLMCR2	R*[2]	H'00	H'FFFF8581	8
Erase block register 1	EBR1	R/W*[1]	H'00*[4]	H'FFFF8582	8
RAM emulation register	RAMER	R/W	H'0000	H'FFFF8628	8, 16, 32

Notes: FLMCR1, FLMCR2, and EBR1 are 8-bit registers, and RAMER is a 16-bit register.

Only byte accesses are valid for FLMCR1, FLMCR2, and EBR1, the access requiring 3 cycles. Three cycles are required for a byte or word access to RAMER, and 6 cycles for a longword access.

When a longword write is performed on RAMER, 0 must always be written to the lower word (address H'FFFF8630). Operation is not guaranteed if any other value is written.

1. In modes in which the on-chip flash memory is disabled, a read will return H'00, and writes are invalid. Writes are also disabled when the FWE bit is set to 1 in FLMCR1.
2. A read in a mode in which on-chip flash memory is disabled will return H'00.
3. When a low level is input to the FWP pin, the initial value is H'80.
4. When a high level is input to the FWP pin, or if a low level is input and the SWE bit in FLMCR1 is not set, these registers are initialized to H'00.

18.5 Register Descriptions

18.5.1 Flash Memory Control Register 1 (FLMCR1)

Bit:	7	6	5	4	3	2	1	0
	FWE	SWE	ESU	PSU	EV	PV	E	P
Initial value:	1/0	0	0	0	0	0	0	0
R/W:	R	R/W	R/W	R/W	R/W	R/W	R/W	R/W

FLMCR1 is an 8-bit register used for flash memory operating mode control. Program-verify mode or erase-verify mode is entered by setting SWE to 1 when FWE = 1. Program mode is entered by setting SWE to 1 when FWE = 1, then setting the PSU bit, and finally setting the P bit. Erase mode is entered by setting SWE to 1 when FWE = 1, then setting the ESU bit, and finally setting the E bit. FLMCR1 is initialized by a reset, and in hardware standby mode and software standby mode. Its initial value is H'80 when a high level is input to the FWE pin, and H'00 when a low level is input. When on-chip flash memory is disabled, a read will return H'00, and writes are invalid.

Writes to bits SWE, ESU, PSU, EV, and PV are enabled only when FWE = 1 and SWE = 1; writes to the E bit only when FWE = 1, SWE = 1, and ESU = 1; and writes to the P bit only when FWE = 1, SWE = 1, and PSU = 1.

Bit 7—Flash Write Enable Bit (FWE): Sets hardware protection against flash memory programming/erasing.

Bit 7 FWE	Description	
0	When a low level is input to the FWP pin (hardware-protected state)	(Initial value)
1	When a high level is input to the FWP pin	

Bit 6—Software Write Enable Bit (SWE): Enables or disables the flash memory. This bit should be set before setting bits 5 to 0, and EBR1 bits 7 to 0.

Bit 6 SWE	Description	
0	Writes disabled	(Initial value)
1	Writes enabled [Setting condition] When FWE = 1	

Bit 5—Erase Setup Bit (ESU): Prepares for a transition to erase mode. Do not set the SWE, PSU, EV, PV, E, or P bit at the same time.

Bit 5 ESU	Description	
0	Erase setup cleared	(Initial value)
1	Erase setup [Setting condition] When FWE = 1 and SWE = 1	

Bit 4—Program Setup Bit (PSU): Prepares for a transition to program mode. Do not set the SWE, ESU, EV, PV, E, or P bit at the same time.

Bit 4 PSU	Description	
0	Program setup cleared	(Initial value)
1	Program setup [Setting condition] When FWE = 1 and SWE = 1	

Bit 3—Erase-Verify (EV): Selects erase-verify mode transition or clearing. Do not set the SWE, ESU, PSU, PV, E, or P bit at the same time.

Bit 3 EV	Description	
0	Erase-verify mode cleared	(Initial value)
1	Transition to erase-verify mode [Setting condition] When FWE = 1 and SWE = 1	

Bit 2—Program-Verify (PV): Selects program-verify mode transition or clearing. Do not set the SWE, ESU, PSU, EV, E, or P bit at the same time.

Bit 2 PV	Description	
0	Program-verify mode cleared	(Initial value)
1	Transition to program-verify mode [Setting condition] When FWE = 1 and SWE = 1	

Bit 1—Erase (E): Selects erase mode transition or clearing. Do not set the SWE, ESU, PSU, EV, PV, or P bit at the same time.

Bit 1 E	Description	
0	Erase mode cleared	(Initial value)
1	Transition to erase mode [Setting condition] When FWE = 1, SWE = 1, and ESU = 1	

Bit 0—Program (P): Selects program mode transition or clearing. Do not set the SWE, PSU, ESU, EV, PV, or E bit at the same time.

Bit 0 P	Description	
0	Program mode cleared	(Initial value)
1	Transition to program mode [Setting condition] When FWE = 1, SWE = 1, and PSU = 1	

18.5.2 Flash Memory Control Register 2 (FLMCR2)

Bit:	7	6	5	4	3	2	1	0
	FLER	—	—	—	—	—	—	—
Initial value:	0	0	0	0	0	0	0	0
R/W:	R	R	R	R	R	R	R	R

FLMCR2 is an 8-bit register that monitors the presence or absence of flash memory program/erase protection (error protection). FLMCR2 is initialized to H'00 by a reset, and in hardware standby mode.

When on-chip flash memory is disabled, a read will return H'00.

Bit 7—Flash Memory Error (FLER): Indicates that an error has occurred during an operation on flash memory (programming or erasing). When FLER is set to 1, flash memory goes to the error-protection state.

Bit 7 FLER	Description	
0	Flash memory is operating normally. Flash memory program/erase protection (error protection) is disabled. [Clearing condition] Power-on reset	(Initial value)
1	An error has occurred during flash memory programming/erasing. Flash memory program/erase protection (error protection) is enabled. [Setting condition] See section 18.8.3, Error Protection.	

Bits 6 to 0—Reserved: These bits are always read as 0.

18.5.3 Erase Block Register 1 (EBR1)

EBR1 is an 8-bit readable/writable register that specifies the flash memory erase area block by block. EBR1 is initialized to H'00 by a reset, in hardware standby mode and software standby mode, when a low level is input to the FWE pin, and when a high level is input to the FWE pin and the SWE bit in FLMCR1 is not set. When a bit in EBR1 is set to 1, the corresponding block can be erased. Other blocks are erase-protected. Set only one bit in EBR1 (more than one bit cannot be set). When on-chip flash memory is disabled, a read will return H'00, and writes are invalid.

The flash memory block configuration is shown in table 18.4.

Bit:	7	6	5	4	3	2	1	0
	EB7	EB6	EB5	EB4	EB3	EB2	EB1	EB0
Initial value:	0	0	0	0	0	0	0	0
R/W:	R/W	R/W	R/W	R/W	R/W	R/W	R/W	R/W

Table 18.4 Flash Memory Erase Blocks

Block (Size)	Address
EB0 (32 kB)	H'000000 to H'007FFF
EB1 (32 kB)	H'008000 to H'00FFFF
EB2 (32 kB)	H'010000 to H'017FFF
EB3 (28 kB)	H'018000 to H'01EFFF
EB4 (1 kB)	H'01F000 to H'01F3FF
EB5 (1 kB)	H'01F400 to H'01F7FF
EB6 (1 kB)	H'01F800 to H'01FBFF
EB7 (1 kB)	H'01FC00 to H'01FFFF

18.5.4 RAM Emulation Register (RAMER)

RAMER specifies the area of flash memory to be overlapped with part of RAM when emulating real-time flash memory programming. RAMER is initialized to H'0000 by a reset and in hardware standby mode. It is not initialized in software standby mode. RAMER settings should be made in user mode or user program mode.

Flash memory area divisions are shown in table 18.5. To ensure correct operation of the emulation function, the ROM for which RAM emulation is performed should not be accessed immediately after this register has been modified. Normal execution of an access immediately after register modification is not guaranteed.

Bit:	15	14	13	12	11	10	9	8
	—	—	—	—	—	—	—	—
Initial value:	0	0	0	0	0	0	0	0
R/W:	R	R	R	R	R	R	R	R

Bit:	7	6	5	4	3	2	1	0
	—	—	—	—	—	RAMS	RAM1	RAM0
Initial value:	0	0	0	0	0	0	0	0
R/W:	R	R	R	R	R	R/W	R/W	R/W

Bits 15 to 3—Reserved: These bits are always read as 0.

Bit 2—RAM Select (RAMS): Specifies selection or non-selection of flash memory emulation in RAM. When RAMS = 1, all flash memory block are program/erase-protected.

Bit 2 RAMS	Description	
0	Emulation not selected Program/erase-protection of all flash memory blocks is disabled	(Initial value)
1	Emulation selected Program/erase-protection of all flash memory blocks is enabled	

Bits 1 and 0—Flash Memory Area Selection (RAM1, RAM0): These bits are used together with bit 2 to select the flash memory area to be overlapped with RAM. (See table 18.5.)

Table 18.5 Flash Memory Area Divisions

Addresses	Block Name	RAMS	RAM1	RAM0
H'FFF800 to H'FFFBFF	RAM area 1 kB	0	*	*
H'01F000 to H'01F3FF	EB4 (1 kB)	1	0	0
H'01F400 to H'01F7FF	EB5 (1 kB)	1	0	1
H'01F800 to H'01FBFF	EB6 (1 kB)	1	1	0
H'01FC00 to H'01FFFF	EB7 (1 kB)	1	1	1

Legend:
*: Don't care

18.6 On-Board Programming Modes

When pins are set to on-board programming mode and a reset-start is executed, a transition is made to the on-board programming state in which program/erase/verify operations can be performed on the on-chip flash memory. There are two on-board programming modes: boot mode and user program mode. The pin settings for transition to each of these modes are shown in table 18.6. For a diagram of the transitions to the various flash memory modes, see figure 18.2.

Table 18.6 Setting On-Board Programming Modes

Mode		PLL Multiple	FWP	MD3	MD2	MD1	MD0
Boot mode	Expanded mode	×1	0	0	0	0	0
	Single chip mode			0	0	0	1
	Expanded mode	×2		0	1	0	0
	Single chip mode			0	1	0	1
	Expanded mode	×4		1	0	0	0
	Single chip mode			1	0	0	1
User program mode	Expanded mode	×1	0	0	0	1	0
	Single chip mode			0	0	1	1
	Expanded mode	×2		0	1	1	0
	Single chip mode			0	1	1	1
	Expanded mode	×4		1	0	1	0
	Single chip mode			1	0	1	1

18.6.1 Boot Mode

When boot mode is used, the flash memory programming control program must be prepared in the host beforehand. The SCI to be used is set to channel asynchronous mode.

When a reset-start is executed after the SH7017 pins have been set to boot mode, the boot program built into the SH7017 is started and the programming control program prepared in the host is serially transmitted to the SH7017 via the SCI. In the SH7017, the programming control program received via the SCI is written into the programming control program area in on-chip RAM. After the transfer is completed, control branches to the start address of the programming control program area and the programming control program execution state is entered (flash memory programming is performed).

The transferred programming control program must therefore include coding that follows the programming algorithm given later.

The system configuration in boot mode is shown in figure 18.8, and the boot mode execution procedure in figure 18.9.

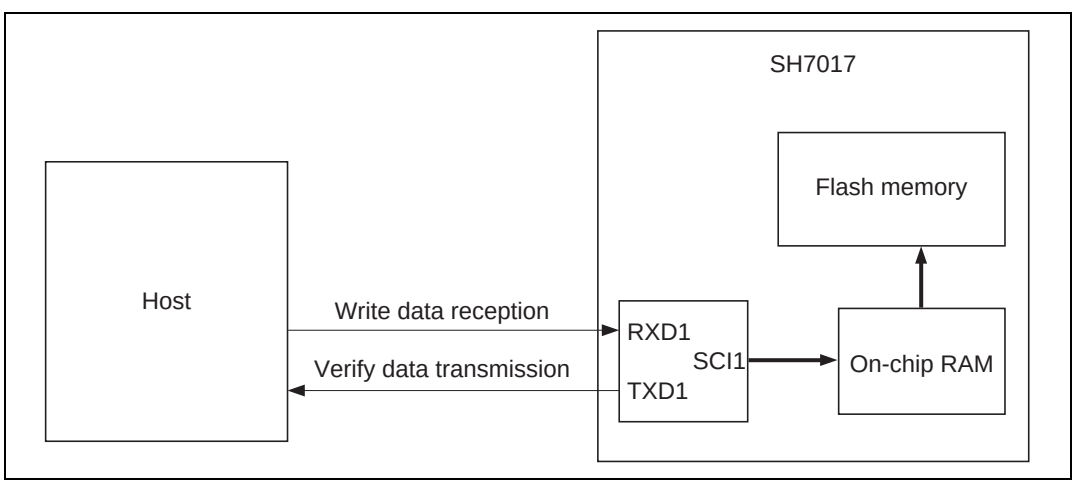

Figure 18.8 System Configuration in Boot Mode

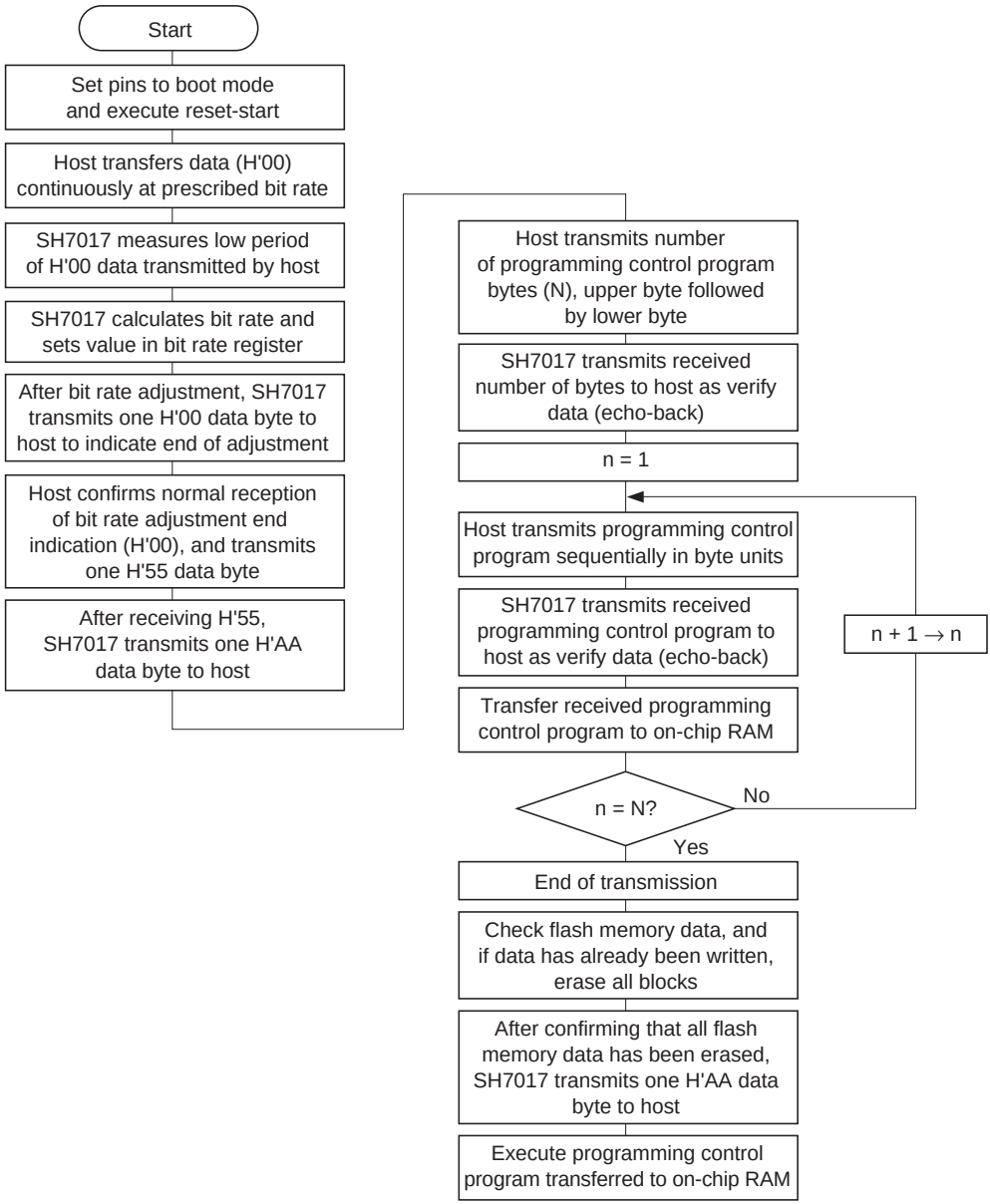

Note: If a memory cell does not operate normally and cannot be erased, one H'FF byte is transmitted as an erase error, and the erase operation and subsequent operations are halted.

Figure 18.9 Boot Mode Execution Procedure

Automatic SCI Bit Rate Adjustment

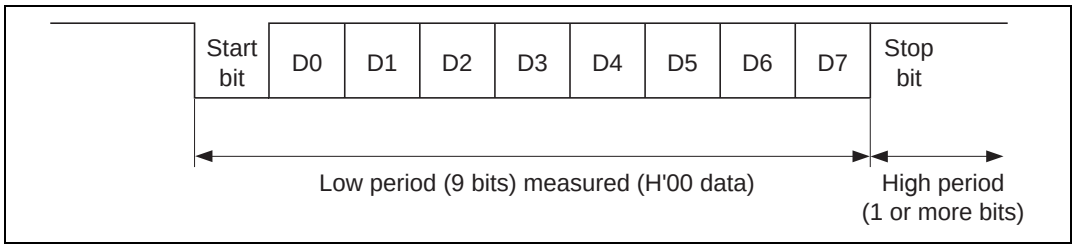

Figure 18.10 Automatic SCI Bit Rate Adjustment

When boot mode is initiated, the SH7017 measures the low period of the asynchronous SCI communication data (H'00) transmitted continuously from the host. The SCI transmit/receive format should be set as follows: 8-bit data, 1 stop bit, no parity. The SH7017 calculates the bit rate of the transmission from the host from the measured low period, and transmits one H'00 byte to the host to indicate the end of bit rate adjustment. The host should confirm that this adjustment end indication (H'00) has been received normally, and transmit one H'55 byte to the SH7017. If reception cannot be performed normally, initiate boot mode again (reset), and repeat the above operations. Depending on the host's transmission bit rate and the SH7017's system clock frequency, there will be a discrepancy between the bit rates of the host and the SH7017. To ensure correct SCI operation, the host's transfer bit rate should be set to 4800bps, 9600bps.

Table 18.7 shows host transfer bit rates and system clock frequencies for which automatic adjustment of the SH7017 bit rate is possible. The boot program should be executed within this system clock range.

Table 18.7 System Clock Frequencies for which Automatic Adjustment of SH7017 Bit Rate is Possible

Host Bit Rate	System Clock Frequency for which Automatic Adjustment of SH7017 Bit Rate is Possible
9600bps	8 to 28.7MHz
4800bps	4 to 20MHz

On-Chip RAM Area Divisions in Boot Mode: In boot mode, the RAM area is divided into an area used by the boot program and an area to which the programming control program is transferred via the SCI, as shown in figure 18.11. The boot program area cannot be used until the execution state in boot mode switches to the programming control program transferred from the host.

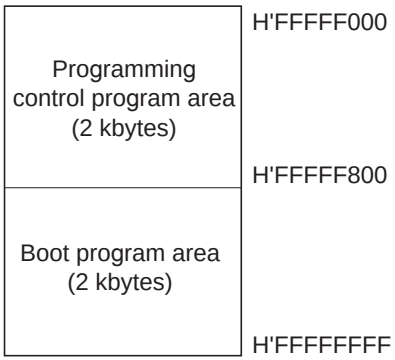

Figure 18.11 RAM Areas in Boot Mode

Note: The boot program area cannot be used until a transition is made to the execution state for the programming control program transferred to RAM. Note also that the boot program remains in this area of the on-chip RAM even after control branches to the programming control program.

18.6.2 User Program Mode

After setting FWP, the user should branch to, and execute, the previously prepared programming/erase control program.

As the flash memory itself cannot be read while flash memory programming/erasing is being executed, the control program that performs programming and erasing should be run in on-chip RAM or external memory.

Use the following procedure (figure 18.12) to execute the programming control program that writes to flash memory (when transferred to RAM).

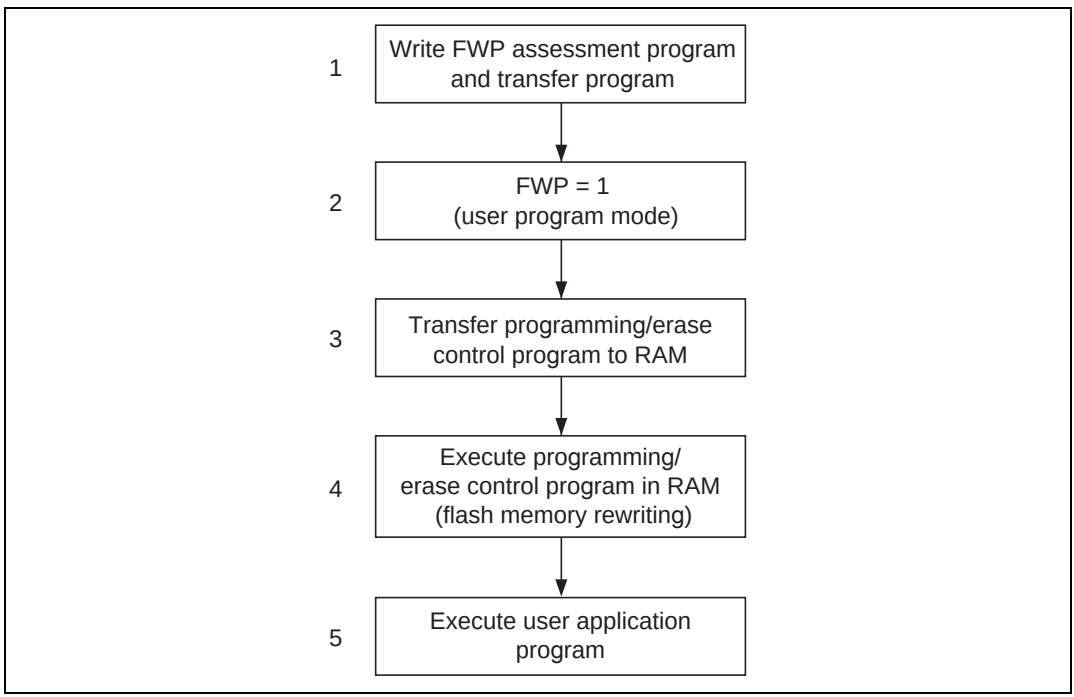

Figure 18.12 User Program Mode Execution Procedure

Note: When programming and erasing, start the watchdog timer so that measures can be taken to prevent program runaway, etc. Memory cells may not operate normally if overprogrammed or overerased due to program runaway.

18.7 Programming/Erasing Flash Memory

A software method, using the CPU, is employed to program and erase flash memory in the on-board programming modes. There are four flash memory operating modes: program mode, erase mode, program-verify mode, and erase-verify mode. Transitions to these modes can be made by setting the PSU, ESU, P, E, PV, and EV bits in FLMCR1.

The flash memory cannot be read while being programmed or erased. Therefore, the program (programming control program) that controls flash memory programming/erasing should be located and executed in on-chip RAM or external memory.

Notes:
1. Operation is not guaranteed if setting/resetting of the SWE, ESU, PSU, EV, PV, E, and P bits in FLMCR1 is executed by a program in flash memory.
2. When programming or erasing, a low level is input to the FWP pin (programming/erasing will not be executed if a high level is input to the FWP pin).
3. Programming should be performed in the erased state. Do not perform additional programming on previously programmed addresses.

18.7.1 Program Mode

Follow the procedure shown in the program/program-verify flowchart in figure 18.7 to write data or programs to flash memory. Performing program operations according to this flowchart will enable data or programs to be written to flash memory without subjecting the device to voltage stress or sacrificing program data reliability. Programming should be carried out 32 bytes at a time.

Following the elapse of 10 μs or more after the SWE bit is set to 1 in flash memory control register 1 (FLMCR1), 32-byte program data is stored in the program data area and reprogram data area, and the 32-byte data in the program data area in RAM is written consecutively to the program address (the lower 8 bits of the first address written to must be H'00, H'20, H'40, H'60, H'80, H'A0, H'C0, or H'E0). Thirty-two consecutive byte data transfers are performed. The program address and program data are latched in the flash memory. A 32-byte data transfer must be performed even if writing fewer than 32 bytes; in this case, H'FF data must be written to the extra addresses.

Next, the watchdog timer is set to prevent overprogramming in the event of program runaway, etc. Set a minimum value of 300 μs or more as the WDT overflow period. After this, preparation for program mode (program setup) is carried out by setting the PSU bit in FLMCR1, and after the elapse of 50 μs or more, the operating mode is switched to program mode by setting the P bit in FLMCR1. The time during which the P bit is set is the flash memory programming time. Use a fixed 200 μs pulse for the write time.

18.7.2 Program-Verify Mode

In program-verify mode, the data written in program mode is read to check whether it has been correctly written in the flash memory.

After the elapse of a given programming time, the programming mode is exited (the P bit in FLMCR1 is cleared, then the PSUn bit is cleared at least 10 μs later). The watchdog timer is cleared after the elapse of 10 μs or more, and the operating mode is switched to program-verify mode by setting the PV bit in FLMCR1. Before reading in program-verify mode, a dummy write of H'FF data should be made to the addresses to be read. The dummy write should be executed after the elapse of 4 μs or more. When the flash memory is read in this state (verify data is read in 32-bit units), the data at the latched address is read. Wait at least 2 μs after the dummy write before performing this read operation. Next, the written data is compared with the verify data, and reprogram data is computed (see figure 18.13) and transferred to the reprogram data area. After 32 bytes of data have been verified, exit program-verify mode, wait for at least 4 μs, then clear the SWE bit in FLMCR1. If reprogramming is necessary, set program mode again, and repeat the program/program-verify sequence as before. However, ensure that the program/program-verify sequence is not repeated more than 1000 times on the same bits.

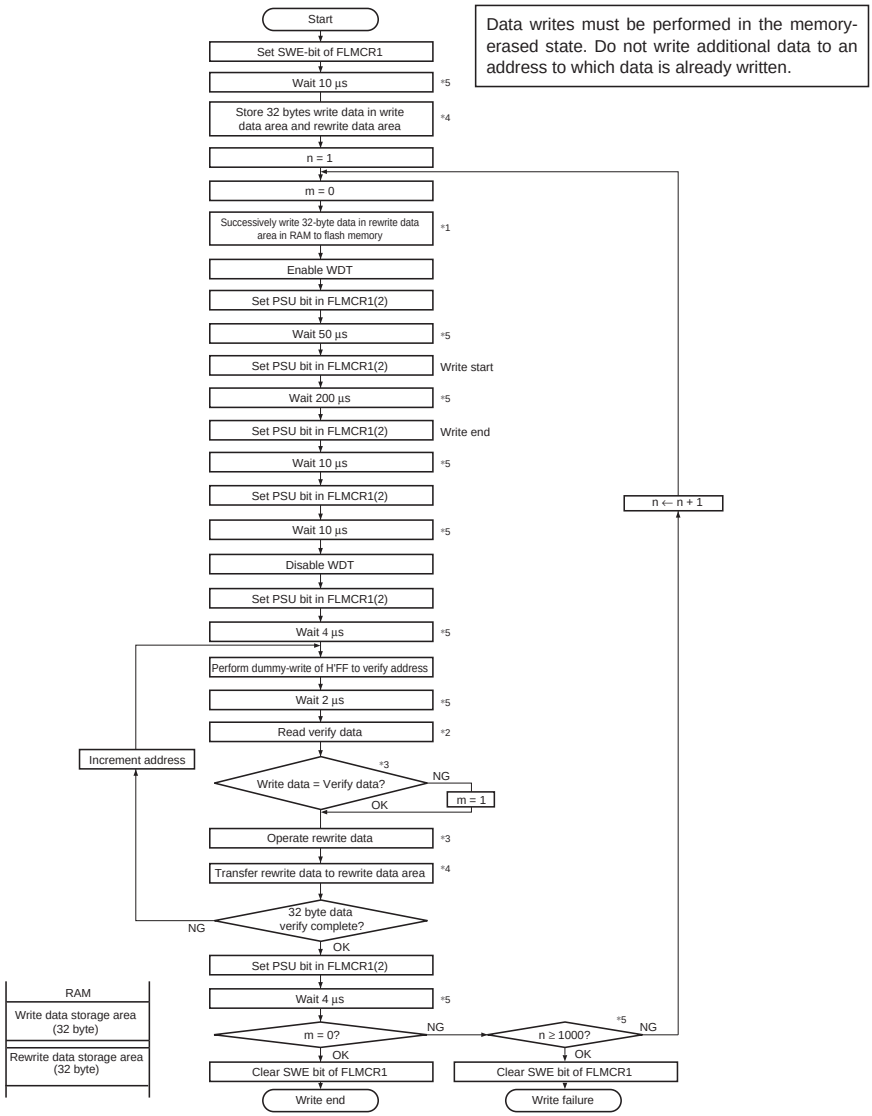

Notes:
1. Transfer data in a byte unit. The lower eight bits of the start address to which data is written must be H'00, H'20, H'40, H'60, H'80, H'A0, H'C0, or H'E0. Transfer 32-byte data even when writing fewer than 32 bytes. In this case, Set H'FF in unused addresses.
2. Read verify data in logword form (32 bits).
3. Already programmed bits are not reprogrammed. Reprogram data is determined by the computation shown below.
4. The write data storage area (32 bytes) and rewrite data storage area (32 bytes) must be located in RAM. The contents of the rewrite data storage area are rewritten as writing progresses.
5. Set the values of x, y, z, α, β, γ, ε, η, and N to match the characteristics of the memory device.

Previous write data	Verify data (V)	Rewrite data (X)	Description
0	0	1	Rewrite should not be performed to bits already written to.
0	1	0	Write is incomplete; rewrite should be performed.
1	0	1	—
1	1	1	Left in the erased state.

Figure 18.13 Program/Program-Verify Flowchart

- Sample 32-byte programming program

  The wait time set values (number of loops) are for the case where f = 28.7 MHz. For other frequencies, the set value is given by the following expression:

  Wait time (μs) × f (MHz) ÷ 4

Registers Used

R4 (input):	Program data storage address
R5 (input):	Programming destination address
R7 (output):	OK (normal) or NG (error)
R0 to R3, R8 to R13:	Work registers

```
FLMCR1          .EQU    H'80
FLMCR2          .EQU    H'81
OK              .EQU    H'0
NG              .EQU    H'1
Wait10u         .EQU    72
Wait50u         .EQU    359
Wait4u          .EQU    29
Wait2u          .EQU    14
Wait200u        .EQU    1435
WDT_TCSR        .EQU    H'FFFF8610
WDT_573u        .EQU    H'A579
SWESET          .EQU    B'01000000
PSU1SET         .EQU    B'00010000
P1SET           .EQU    B'00000001
P1CLEAR         .EQU    B'11111110
PSU1CLEAR       .EQU    B'11101111
PVSET           .EQU    B'00000100
PVCLEAR         .EQU    B'11111011
SWECLEAR        .EQU    B'10111111
MAXVerify       .EQU    1000
;
FlashProgram    .EQU    $
        MOV     #H'01,R2            ; R2 work register (1)
        MOV.L   #PdataBuff,R0       ; Save program data to work area
        MOV     R4,R12
        MOV     #8,R13
COPY_LOOP       .EQU    $
```

```
        MOV.L     @R12+,R1
        MOV.L     R1,@R0
        ADD.L     #4,R0
        ADD.L     #-1,R13
        CMP/PL    R13
        BT        COPY_LOOP
        MOV.L     #H'FFFF8500,R0        ; Initialize GBR
        LDC       R0,GBR
;
        MOV.L     #Wait10u,R3
        MOV.L     #FLMCR1,R0            ; Initialize R0 to FLCMR1 address
        OR.B      #SWESET,@(R0,GBR)     ; Set SWE
Wait_1  SUBC      R2,R3                 ; Wait 10 µs
        BF        Wait_1
;
        MOV.L     #H'20000,R9
        CMP/GT    R5,R9
        BT        Program_Start
        MOV.L     #FLMCR2,R0
Program_Start     .EQU     $
        MOV.L     #0,R9                 ; Initialize n (R9) to 0
;
Program_loop      .EQU     $
        MOV.L     #0,R10                ; Initialize m (R10) to 0
        MOV.L     #32,R3                ; Write 32-byte data consecutively
        MOV.L     #PdataBuff,R12
        MOV.L     R5,R13
Write_Loop        .EQU     $
        MOV.B     @R12+,R1
        MOV.B     R1,@R13
        ADD.L     #1,R13
        ADD.L     #-1,R3
        CMP/PL    R3
        BT        Write_Loop
;
        MOV.L     #WDT_TCSR,R1          ; Enable WDT
        MOV.W     #WDT_573u,R3          ; 573.4 µs cycle
        MOV.W     R3,@R1
```

```
;
        MOV.L     #Wait50u,R3
        OR.B      #PSU1SET,@(R0,GBR)   ; Set PSU
Wait_2  SUBC      R2,R3                ; Wait 50 µs
        BF        Wait_2
;
        MOV.L     #Wait200u,R3
        OR.B      #P1SET,@(R0,GBR)     ; Set P
Wait_3  SUBC      R2,R3                ; Wait 200 µs
        BF        Wait_3
;
        MOV.L     #Wait10u,R3
        AND.B     #P1CLEAR,@(R0,GBR)   ; Clear P
Wait_4  SUBC      R2,R3                ; Wait 10 µs
        BF        Wait_4
;
        MOV.L     #Wait10u,R3
        AND.B     #PSU1CLEAR,@(R0,GBR) ; Clear PSU
Wait_5  SUBC      R2,R3                ; Wait 10 µs
        BF        Wait_5
;
        MOV.L     #WDT_TCSR,R1         ; Disable WDT
        MOV.W     #H'A55F,R3
        MOV.W     R3,@R1
;
        MOV.L     #Wait4u,R3
        OR.B      #PVSET,@(R0,GBR)     ; Set PV
Wait_6  SUBC      R2,R3                ; Wait 4 µs
        BF        Wait_6
;
        MOV.L     PdataBuff,R3
        MOV.L     R4,R1
        MOV.L     R5,R12
        MOV.L     #8,R13
        MOV.L     #H'FFFFFFFF,R11
;
VerifyLoop        .EQU     $
        MOV.L     R11,@R12             ; Write H'FF to verify address
```

```
        MOV.L     R11,@R3              ; Reprogram data RAM (PdataBuff) initialization
        MOV.L     #Wait2u,R7
Wait_7  SUBC      R2,R7                ; Wait 2 µs
        BF        Wait_7
;
        MOV.L     @R12+,R7
        MOV.L     @R1+,R8
        CMP/EQ    R7,R8                ; Verify
        BT        Verify_OK
        MOV.L     #1,R10               ; Verify NG, m <- 1
        XOR       R8,R7                ; Program data computation
        NOT       R7,R7
        OR        R7,R8
        MOV.L     R8,@R3               ; Store in reprogram data RAM (PdataBuff)
Verify_OK         .EQU     $
        ADD.L     #4,R3
        ADD.L     #-1,R13
        CMP/PL    R13
        BT        VerifyLoop
;
        MOV.L     #Wait4u,R7
        AND.B     #PVCLEAR,@(R0,GBR)   ; Clear PV
Wait_8  SUBC      R2,R7                ; Wait 4 µs
        BF        Wait_8
;
        CMP/PL    R10                  ; if m=0 then GOTO Program_OK
        BF        Program_OK
        ADD       #1,R9
        MOV.L     #NG,R7               ; R7 <- NG (return value)
        MOV.L     #MAXVerify,R12       ; if n>=MAXVerify then Program NG
        CMP/EQ    R9,R12
        BT        Program_end
        BRA       Program_loop
        NOP
Program_OK        .EQU     $
        MOV.L     #OK,R7               ; R7 <- OK (return value)
Program_end       .EQU     $
        MOV.B     #H'00,R0
```

```
        MOV.B     R0,@(FLMCR1,GBR)     ; Clear SWE
;
        RTS
        NOP
;
        .ALIGN    4
PdataBuff         .RES.B  32
```

18.7.3 Erase Mode

When erasing flash memory, the erase/erase-verify flowchart shown in figure 18.14 should be followed.

To perform data or program erasure, set the 1 bit flash memory area to be erased in erase block register 1 (EBR1) at least 10 µs after setting the SWE bit to 1 in flash memory control register 1 (FLMCR1). Next, the watchdog timer is set to prevent overerasing in the event of program runaway, etc. Set 9.2 ms as the WDT overflow period. After this, preparation for erase mode (erase setup) is carried out by setting the ESU bit in FLMCR1, and after the elapse of 200 µs or more, the operating mode is switched to erase mode by setting the E bit in FLMCR1. The time during which the E bit is set is the flash memory erase time. Ensure that the erase time does not exceed 5 ms.

Note: With flash memory erasing, preprogramming (setting all memory data in the memory to be erased to all “0”) is not necessary before starting the erase procedure.

18.7.4 Erase-Verify Mode

In erase-verify mode, data is read after memory has been erased to check whether it has been correctly erased.

After the elapse of the erase time, erase mode is exited (the E bit in FLMCR1 is cleared, then the ESU bit is cleared at least 10 μs later), the watchdog timer is cleared after the elapse of 10 μs or more, and the operating mode is switched to erase-verify mode by setting the EV bit in FLMCR1. Before reading in erase-verify mode, a dummy write of H'FF data should be made to the addresses to be read. The dummy write should be executed after the elapse of 20 μs or more. When the flash memory is read in this state (verify data is read in 32-bit units), the data at the latched address is read. Wait at least 2 μs after the dummy write before performing this read operation. If the read data has been erased (all “1”), a dummy write is performed to the next address, and erase-verify is performed. If the read data has not been erased, set erase mode again, and repeat the erase/erase-verify sequence in the same way. However, ensure that the erase/erase-verify sequence is not repeated more than 60 times. When verification is completed, exit erase-verify mode, and wait for at least 5 μs. If erasure has been completed on all the erase blocks, clear the SWE bit in FLMCR1. If there are any unerased blocks, set 1 bit for the flash memory area to be erased, and repeat the erase/erase-verify sequence in the same way.

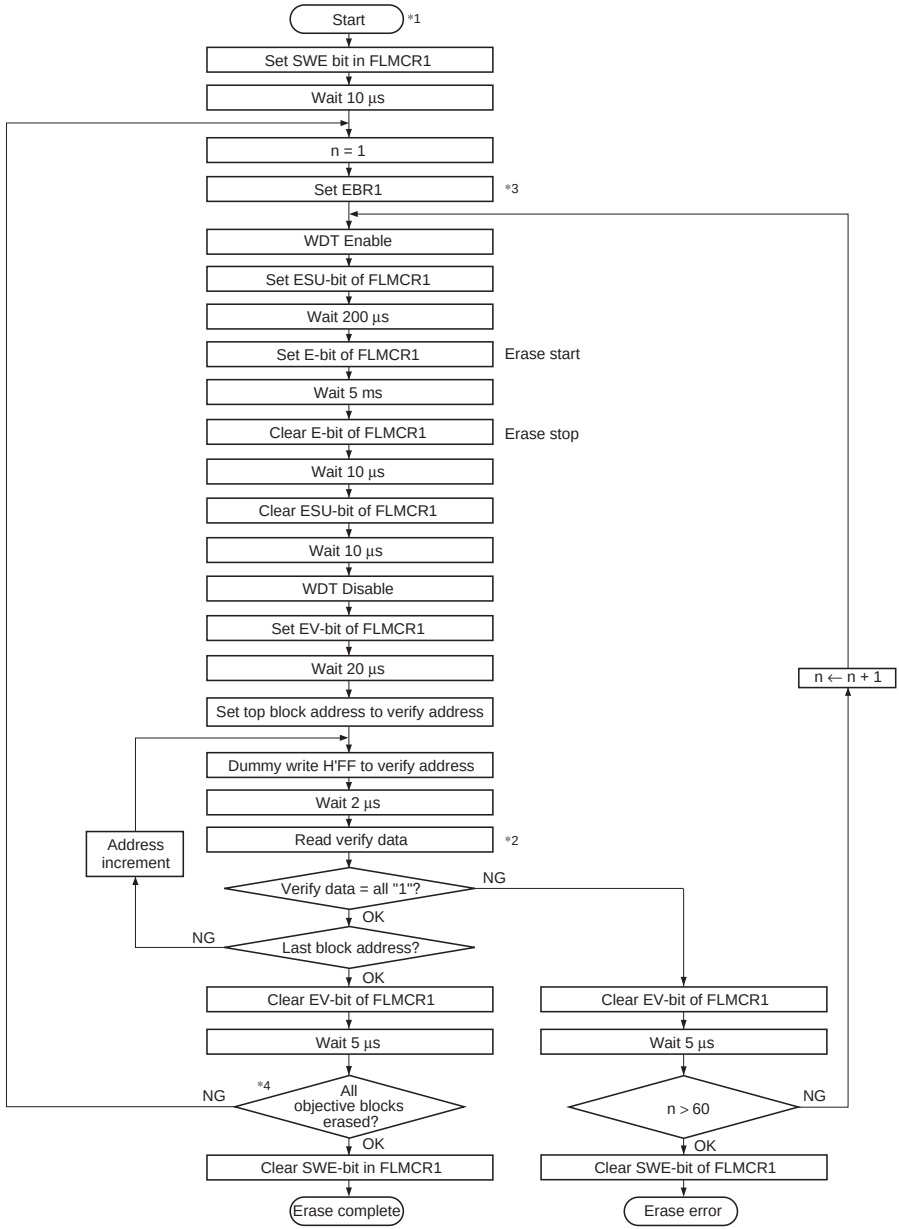

Notes: 1. Preprogramming (setting erase block data to all "0") is not necessary.
2. Verify data is read in 32-bit (longword) units.
3. Set only one bit in EBR1. More than one bit cannot be set.
4. Erasing is performed in block units. To erase a number of blocks, each block must be erased in turn.

Figure 18.14 Erase/Erase-Verify Flowchart (Single-Block Erase)

- Sample one-block erase program

  The wait time set values (number of loops) are for the case where f = 28.7 MHz. For other frequencies, the set value is given by the following expression:

  Wait time (μs) × f (MHz) ÷ 4

  The WDT overflow cycle set value is for the case where f = 28.7 MHz. For other frequencies, ensure that the overflow cycle is a minimum of 5.3 ms.

Registers Used

R5 (input): Memory block table pointer
R7 (output): OK (normal) or NG (error)
R0 to R3, R6, R8 and R9: Work registers

```
FLMCR1          .EQU    H'80
FLMCR2          .EQU    H'81
EBR1            .EQU    H'82
EBR2            .EQU    H'83
Wait10u         .EQU    72
Wait2u          .EQU    14
Wait200u        .EQU    1435
Wait5m          .EQU    35875
Wait20u         .EQU    144
Wait5u          .EQU    36
WDT_TCSR        .EQU    H'FFFF8610
WDT_9m          .EQU    H'A57D
SWESET          .EQU    B'01000000
ESUSET          .EQU    B'00100000
ESET            .EQU    B'00000010
ECLEAR          .EQU    B'11111101
ESUCLEAR        .EQU    B'11011111
EVSET           .EQU    B'00001000
EVCLEAR         .EQU    B'11110111
SWECLEAR        .EQU    B'10111111
MAXErase        .EQU    60
;
FlashErase      .EQU    $
        MOV.L   #H'FFFF8500,R0
        LDC     R0,GBR              ; Initialize GBR
        MOV.L   #1,R2
```

```
;
        MOV.L     #Wait10u,R3
        MOV.L     #FLMCR1,R0
        OR.B      #SWESET,@(R0,GBR)     ; Set SWE
EWait_1 SUBC      R2,R3                 ; Wait 10 µs
        BF        EWait_1
;
        MOV.L     #0,R9                 ; Initialize n (R9) to 0
;
        MOV.B     @(6,R5),R0
        MOV.B     R0,@(EBR1,GBR)        ; Erase memory block (EBR1) setting
        MOV.B     @(7,R5),R0
        MOV.B     R0,@(EBR2,GBR)        ; Erase memory block (EBR2) setting
;
        MOV.L     #FLMCR1,R0
        MOV.L     @R5,R6                ; Erase memory block start address -> R6
        MOV.L     #H'020000,R7
        CMP/GT    R6,R7
        BT        EraseLoop
        MOV.L     #FLMCR2,R0
;
EraseLoop         .EQU      $
        MOV.L     #WDT_TCSR,R1          ; Enable WDT
        MOV.W     #WDT_9m,R3            ; 9.2 ms cycle
        MOV.W     R3,@R1
;
        MOV.L     #Wait200u,R3
        OR.B      #ESUSET,@(R0,GBR)     ; Set ESU
EWait_2 SUBC      R2,R3                 ; Wait 200 µs
        BF        EWait_2
;
        MOV.L     #Wait5m,R3
        OR.B      #ESET,@(R0,GBR)       ; Set E
EWait_3 SUBC      R2,R3                 ; Wait 5 ms
        BF        EWait_3
;
        MOV.L     #Wait10u,R3
        AND.B     #ECLEAR,@(R0,GBR)     ; Clear E
```

```
EWait_4 SUBC      R2,R3                  ; Wait 10 µs
        BF        EWait_4
;
        MOV.L     #Wait10u,R3
        AND.B     #ESUCLEAR,@(R0,GBR)    ; Clear ESU
EWait_5 SUBC      R2,R3                  ; Wait 10 µs
        BF        EWait_5
;
        MOV.L     #WDT_TCSR,R1           ; Disable WDT
        MOV.W     #H'A55F,R3
        MOV.W     R3,@R1
;
        MOV.L     #Wait20u,R3
        OR.B      #EVSET,@(R0,GBR)       ; Set EV
EWait_6 SUBC      R2,R3                  ; Wait 20 µs
        BF        EWait_6
;
        MOV.L     @R5,R6                 ; Erase memory block start address -> R6
BlockVerify_1     .EQU      $            ; Erase-verify
        MOV.L     #H'FFFFFFFF,R8
        MOV.L     R8,@R6                 ; H'FF dummy write
        MOV.L     #Wait2u,R3
EWait_7 SUBC      R2,R3
        BF        EWait_7
;
        MOV.L     @R6+,R1                ; Read verify data
        CMP/EQ    R8,R1
        BF        BlockVerify_NG
        MOV.L     @(8,R5),R7
        CMP/EQ    R6,R7                  ; Check for last address of memory block
        BF        BlockVerify_1
        MOV.L     #Wait5u,R3
        AND.B     #EVCLEAR,@(R0,GBR)     ; Clear EV
EWait_8 SUBC      R2,R3                  ; Wait 5 µs
        BF        EWait_8
;
        MOV.L     #OK,R7                 ; R7 <- OK (return value)
        BRA       FlashErase_end         ; Verify OK
```

```
        NOP
;
BlockVerify_NG    .EQU     $
        ADD.L     #1,R9                  ; Verify NG, n <- n + 1
        MOV.L     #Wait5u,R3
        AND.B     #EVCLEAR,@(R0,GBR)     ; Clear EV
EWait_9 SUBC      R2,R3                  ; Wait 5 µs
        BF        EWait_9
        MOV.L     #MAXErase,R7           ; If n > MAXErase then erase NG
        CMP/EQ    R7,R9
        BF        EraseLoop
        MOV.L     #NG,R7                 ; R7 <- NG (return value)
FlashErase_end    .EQU     $
        MOV.L     #FLMCR1,R0
        AND.B     #SWECLEAR,@(R0,GBR)    ; Clear SWE
;
        RTS
        NOP
;
; Memory block table     Memory block start address: EBR value
        .ALIGN    4
Flash_BlockData   .EQU     $
EB0     .DATA.L H'00000000,H'00000100
EB1     .DATA.L H'00008000,H'00000200
EB2     .DATA.L H'00010000,H'00000400
EB3     .DATA.L H'00018000,H'00000800
EB4     .DATA.L H'00020000,H'00000001
EB5     .DATA.L H'00028000,H'00000002
EB6     .DATA.L H'00030000,H'00000004
EB7     .DATA.L H'00038000,H'00000008
EB8     .DATA.L H'0003F000,H'00000010
EB9     .DATA.L H'0003F400,H'00000020
EB10    .DATA.L H'0003F800,H'00000040
EB11    .DATA.L H'0003FC00,H'00000080
Dummy   .DATA.L H'00040000
```

18.8 Protection

There are two kinds of flash memory program/erase protection, hardware protection and software protection.

18.8.1 Hardware Protection

Hardware protection refers to a state in which programming/erasing of flash memory is forcibly disabled or aborted. Hardware protection is reset by settings in flash memory control register 1 (FLMCR1) and erase block register 1 (EBR1). The FLMCR1 and EBR1 settings are retained in the error-protected state. (See table 18.8.)

Table 18.8 Hardware Protection

Item	Description	Functions	
		Program	Erase
FWP pin protection	• When a low level is input to the FWP pin, FLMCR1 and EBR1 are initialized, and the program/erase-protected state is entered.	Yes	Yes
Reset/standby protection	• In a reset (including a WDT overflow reset) and in standby mode, FLMCR1 and EBR1 are initialized, and the program/erase-protected state is entered. • In a power-on reset via the $\overline{\text{RES}}$ pin, the reset state is not entered unless the $\overline{\text{RES}}$ pin is held low until oscillation stabilizes after powering on. In the case of a reset during operation, hold the $\overline{\text{RES}}$ pin low for the $\overline{\text{RES}}$ pulse width specified in the AC Characteristics section.	Yes	Yes

18.8.2 Software Protection

Software protection can be implemented by setting the SWE bit in FLMCR1, erase block register 1 (EBR1) and the RAMS bit in the RAM emulation register (RAMER). When software protection is in effect, setting the P or E bit in flash memory control register 1 (FLMCR1) does not cause a transition to program mode or erase mode. (See table 18.9.)

Table 18.9 Software Protection

Item	Description	Functions	
		Program	Erase
SWE pin protection	• Clearing the SWE bit to 0 in FLMCR1 sets the program/erase-protected state for all blocks. (Execute in on-chip RAM or external memory.)	Yes	Yes
Block specification protection	• Erase protection can be set for individual blocks by settings in erase block register 1 (EBR1). • Setting EBR1 to H'00 places all blocks in the erase-protected state.	—	Yes
Emulation protection	• Setting the RAMS bit to 1 in the RAM emulation register (RAMER) places all blocks in the program/erase-protected state.	Yes	Yes

18.8.3 Error Protection

In error protection, an error is detected when SH7017 runaway occurs during flash memory programming/erasing, or operation is not performed in accordance with the program/erase algorithm, and the program/erase operation is aborted. Aborting the program/erase operation prevents damage to the flash memory due to overprogramming or overerasing.

If the SH7017 malfunctions during flash memory programming/erasing, the FLER bit is set to 1 in FLMCR2 and the error protection state is entered. The FLMCR1 and EBR1 settings are retained, but program mode or erase mode is aborted at the point at which the error occurred. Program mode or erase mode cannot be re-entered by re-setting the P or E bit. However, PV and EV bit setting is enabled, and a transition can be made to verify mode.

FLER bit setting conditions are as follows:

1. When flash memory is read during programming/erasing (including a vector read or instruction fetch)
2. Immediately after exception handling (excluding a reset) during programming/erasing
3. When a SLEEP instruction (including software standby) is executed during programming/erasing
4. When the bus is released during programming/erasing

Error protection is released only by a power-on reset and in hardware standby mode.

Figure 18.15 shows the flash memory state transition diagram.

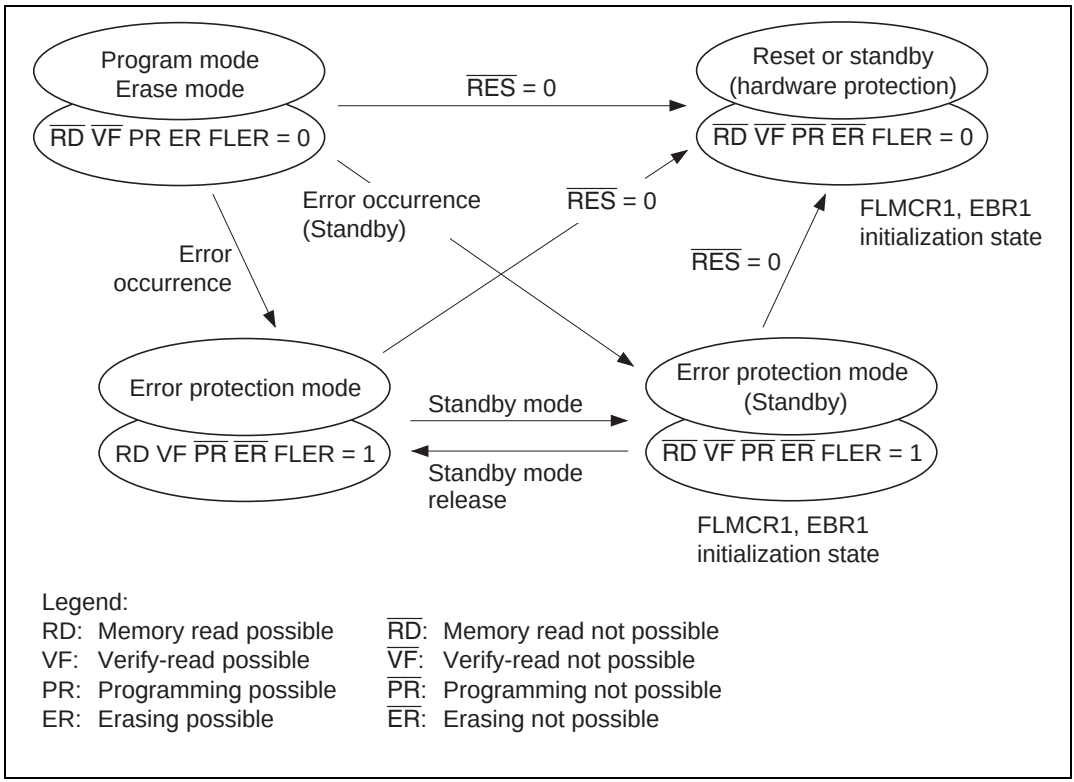

Figure 18.15 Flash Memory State Transitions

18.9 Flash Memory Emulation in RAM

Making a setting in the RAM emulation register (RAMER) enables part of RAM to be overlapped onto the flash memory area so that data to be written to flash memory can be emulated in RAM in real time. After the RAMER setting has been made, accesses cannot be made from the flash memory area or the RAM area overlapping flash memory. Emulation can be performed in user mode and user program mode. Figure 18.16 shows an example of emulation of real-time flash memory programming.

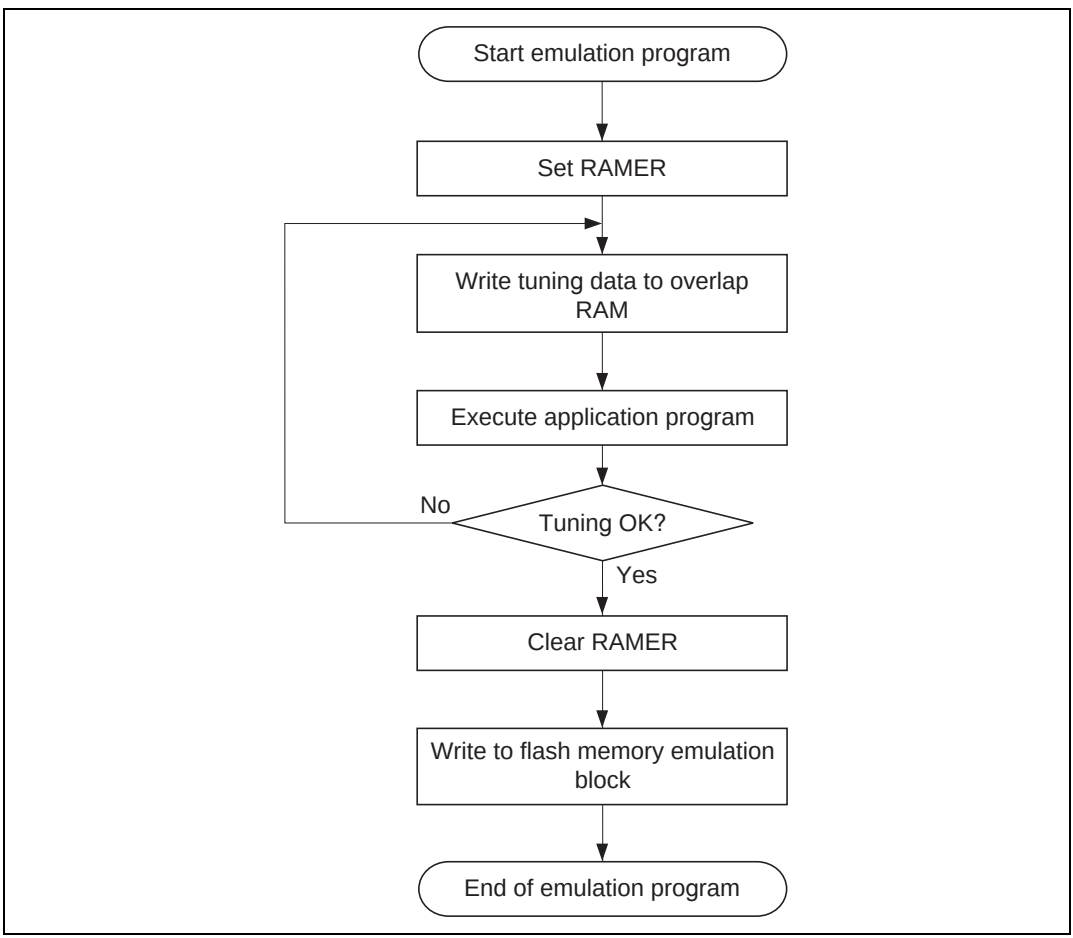

Figure 18.16 Flowchart for Flash Memory Emulation in RAM

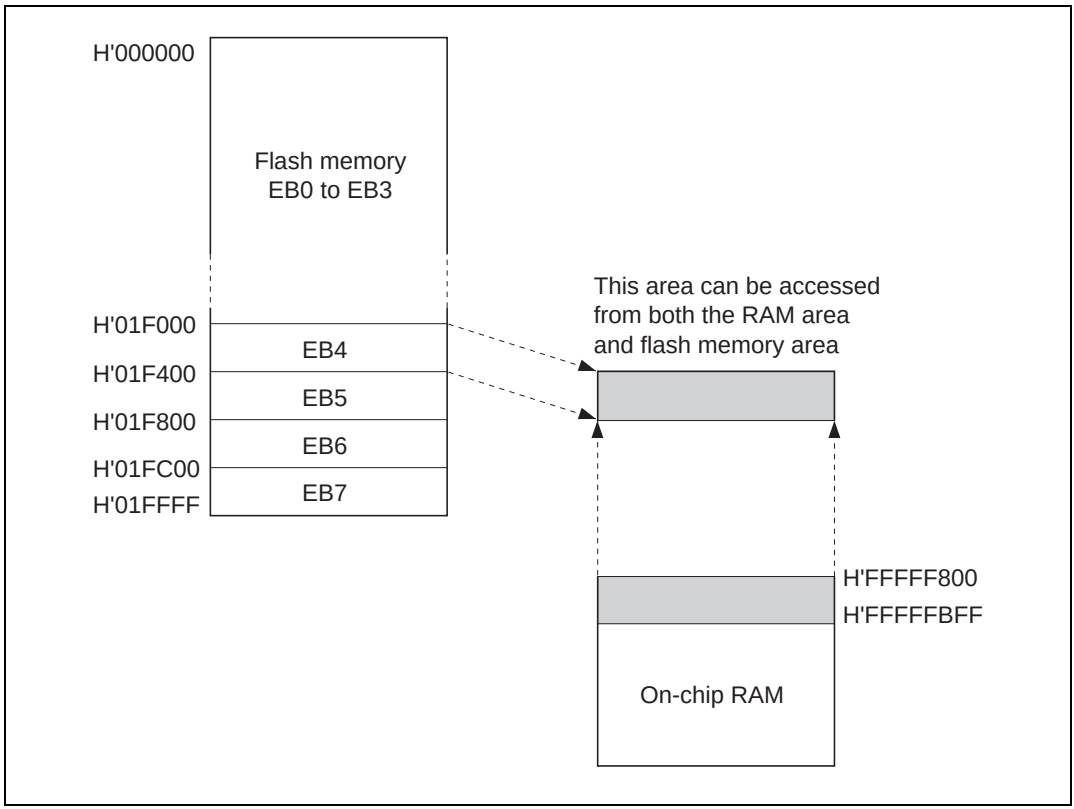

Figure 18.17 Example of RAM Overlap Operation

Example in Which Flash Memory Block Area (EB4) is Overlapped

1. Set bits RAMS, RAM1, and RAM0 in RAMER to 1, 0, 1, to overlap part of RAM onto the area (EB4) for which real-time programming is required.
2. Real-time programming is performed using the overlapping RAM.
3. After the program data has been confirmed, the RAMS bit is cleared, releasing RAM overlap.
4. The data written in the overlapping RAM is written into the flash memory space (EB4).

Notes: 1. When the RAMS bit is set to 1, program/erase protection is enabled for all blocks regardless of the value of RAM1 and RAM0 (emulation protection). In this state, setting the P or E bit in flash memory control register 1 (FLMCR1) will not cause a transition to program mode or erase mode. When actually programming a flash memory area, the RAMS bit should be cleared to 0.

2. A RAM area cannot be erased by execution of software in accordance with the erase algorithm while flash memory emulation in RAM is being used.

18.10 Note on Flash Memory Programming/Erasing

In the on-board programming modes (user mode and user program mode), NMI input should be disabled to give top priority to the program/erase operations (including RAM emulation).

18.11 Flash Memory Programmer Mode

Programs and data can be written and erased in programmer mode as well as in the on-board programming modes. In programmer mode, flash memory read mode, auto-program mode, auto-erase mode, and status read mode are supported. In auto-program mode, auto-erase mode, and status read mode, a status polling procedure is used, and in status read mode, detailed internal signals are output after execution of an auto-program or auto-erase operation.

In programmer mode, set the mode pins to PLL×2 mode (see table 18.10) and input a 6 MHz input clock, so that the SH7017 runs at 12 MHz.

Table 18.10 shows the pin settings for programmer mode. For the pin names in programmer mode, see section 1.3.2, Pin Arrangement by Mode.

Table 18.10 PROM Mode Pin Settings

Pin Names	Settings
Mode pins: MD3, MD2, MD1, MD0	1101 (PLL × 2)
FWE pin	High level input (in auto-program and auto-erase modes)
$\overline{\text{RES}}$ pin	Power-on reset circuit
XTAL, EXTAL, $PLLV_{CC}$, PLLCAP, $PLLV_{SS}$ pins	Oscillator circuit

Note: In programmer mode, the FWP pin has its polarity reversed and functions as the FWE (flash write enable) pin.

18.11.1 Socket Adapter Pin Correspondence Diagram

Connect the socket adapter to the chip as shown in figure 18.19. This will enable conversion to a 32-pin arrangement. The on-chip ROM memory map is shown in figure 18.18, and the socket adapter pin correspondence diagram in figure 18.19.

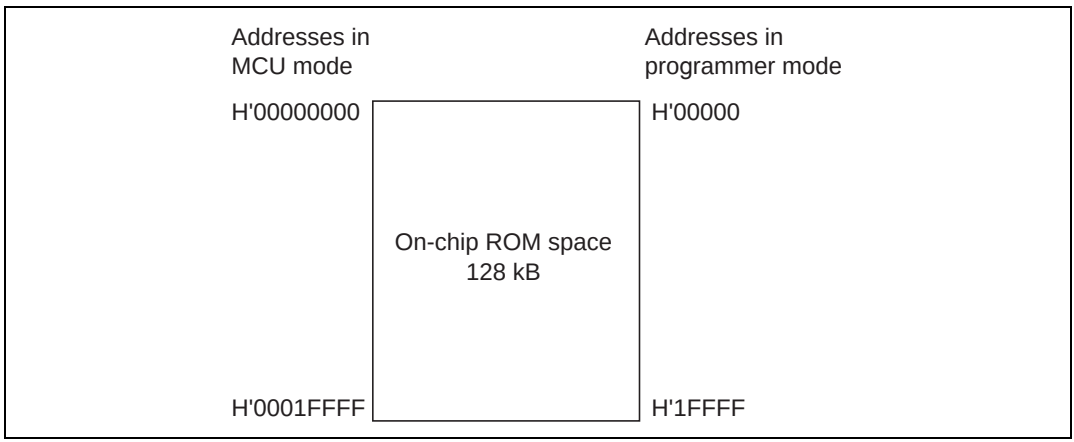

Figure 18.18 On-Chip ROM Memory Map

HD64F7017 (112 Pins)		Socket Adapter (Conversion to 32-Pin Arrangement)	HN28F101P (32 Pins)	
Pin No.	Pin Name		Pin No.	Pin Name
77	FWE		1	FWE
13	A9		26	A9
20	A16		2	A16
19	A15		3	A15
44	$\overline{WE}$		31	$\overline{WE}$
70	D0		13	I/O0
69	D1		14	I/O1
68	D2		15	I/O2
67	D3		17	I/O3
66	D4		18	I/O4
64	D5		19	I/O5
63	D6		20	I/O6
62	D7		21	I/O7
4	A0		12	A0
5	A1		11	A1
6	A2		10	A2
7	A3		9	A3
8	A4		8	A4
9	A5		7	A5
10	A6		6	A6
11	A7		5	A7
12	A8		27	A8
43	$\overline{OE}$		24	$\overline{OE}$
14	A10		23	A10
15	A11		25	A11
16	A12		4	A12
17	A13		28	A13
18	A14		29	A14
42	$\overline{CE}$		22	$\overline{CE}$
21, 37, 46, 49, 50, 65, 73, 75, 76, 79, 100, 103	V_{CC}		32	V_{CC}
			16	V_{SS}
			30	A17
3, 23, 27, 33, 39, 55, 61, 71 78, 90, 91, 92, 93, 94, 95, 96, 97, 98, 99, 101, 109	V_{SS}			
26	A17			
84	$\overline{RES}$	Power-on reset circuit		
72	XTAL	Oscillator circuit		
74	EXTAL			
80	$PLLV_{CC}$			
81	PLLCAP	PLL circuit		
82	$PLLV_{SS}$			
Other than the above	N.C.(OPEN)			

Legend:

FWE:	Flash write enable
I/O7 to I/O0:	Data input/output
A17 to A0:	Address input
$\overline{OE}$:	Output enable
$\overline{CE}$:	Chip enable
$\overline{WE}$:	Write enable

Note: Use address pin A17 as V_{SS}.

Figure 18.19 Socket Adapter Pin Correspondence Table (SH7017: FP-112)

18.11.2 Programmer Mode Operation

Table 18.11 shows how the different operating modes are set when using programmer mode, and table 18.12 lists the commands used in programmer mode. Details of each mode are given below.

- Memory Read Mode

  Memory read mode supports byte reads.
- Auto-Program Mode

  Auto-program mode supports programming of 128 bytes at a time. Status polling is used to confirm the end of auto-programming.
- Auto-Erase Mode

  Auto-erase mode supports automatic erasing of the entire flash memory. Status polling is used to confirm the end of auto-programming.
- Status Read Mode

  Status polling is used for auto-programming and auto-erasing, and normal termination can be confirmed by reading the I/O 6 signal. In status read mode, error information is output if an error occurs.

Table 18.11 Settings for Various Operating Modes In Programmer Mode

	Pin Names					
Mode	**FWE**	**$\overline{CE}$**	**$\overline{OE}$**	**$\overline{WE}$**	**I/O0 to I/O7**	**A0 to A17**
Read	H or L	L	L	H	Data output	Ain
Output disable	H or L	L	H	H	Hi-z	X
Command write	H or L	L	H	L	Data input	*Ain
Chip disable	H or L	H	X	X	Hi-z	X

Notes: 1. Chip disable is not a standby state; internally, it is an operation state.
2. *Ain indicates that there is also address input in auto-program mode.
3. For command writes in auto-program and auto-erase modes, input a high level to the FWE pin.

Table 18.12 Programmer Mode Commands

Command Name	Number of Cycles	1st Cycle			2nd Cycle		
		Mode	Address	Data	Mode	Address	Data
Memory read mode	1 + n	Write	X	H'00	Read	RA	Dout
Auto-program mode	129	Write	X	H'40	Write	WA	Din
Auto-erase mode	2	Write	X	H'20	Write	X	H'20
Status read mode	2	Write	X	H'71	Write	X	H'71

Notes: 1. In auto-program mode. 129 cycles are required for command writing by a simultaneous 128-byte write.
2. In memory read mode, the number of cycles depends on the number of address write cycles (n).

18.11.3 Memory Read Mode

1. After completion of auto-program/auto-erase/status read operations, a transition is made to the command wait state. When reading memory contents, a transition to memory read mode must first be made with a command write, after which the memory contents are read.
2. In memory read mode, command writes can be performed in the same way as in the command wait state.
3. Once memory read mode has been entered, consecutive reads can be performed.
4. After powering on, memory read mode is entered.

Table 18.13 AC Characteristics in Transition to Memory Read Mode

Conditions: V_{CC} = 5.0 V ±10%, V_{SS} = 0 V, T_a = 25°C ±5°C

Item	Symbol	Min	Max	Unit	Notes
Command write cycle	t_{nxtc}	20		μs	
$\overline{CE}$ hold time	t_{ceh}	0		ns	
$\overline{CE}$ setup time	t_{ces}	0		ns	
Data hold time	t_{dh}	50		ns	
Data setup time	t_{ds}	50		ns	
Write pulse width	t_{wep}	70		ns	
$\overline{WE}$ rise time	t_r	30		ns	
$\overline{WE}$ fall time	t_f	30		ns	

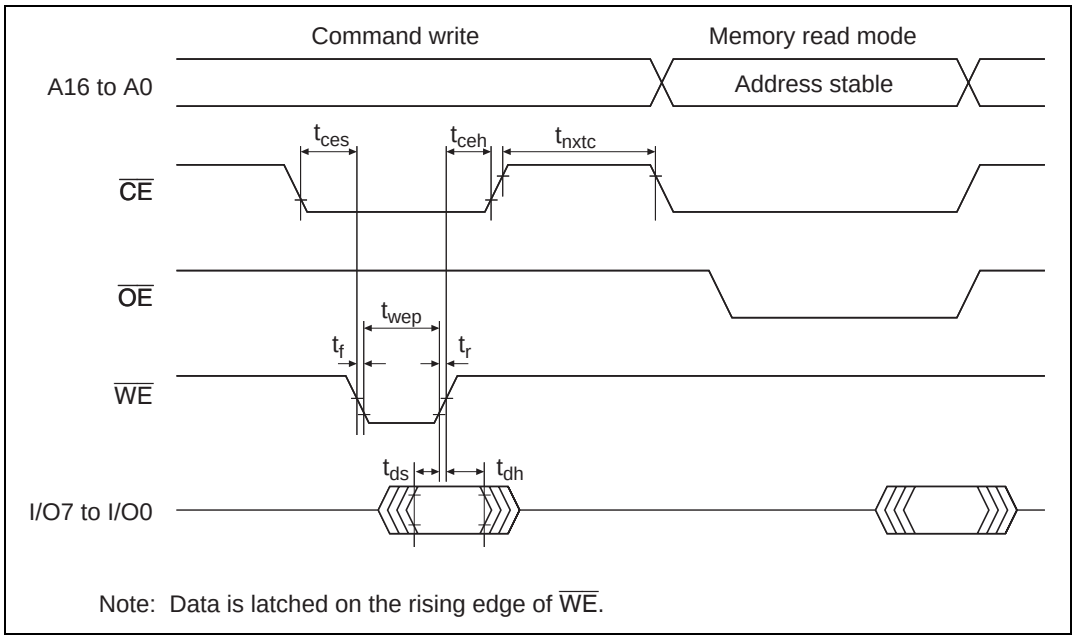

Figure 18.20 Timing Waveforms for Memory Read after Memory Write

Table 18.14 AC Characteristics in Transition from Memory Read Mode to Another Mode

Conditions: V_{CC} = 5.0 V ±10%, V_{SS} = 0 V, T_a = 25°C ±5°C

Item	Symbol	Min	Max	Unit	Notes
Command write cycle	t_{nxtc}	20		μs	
$\overline{CE}$ hold time	t_{ceh}	0		ns	
$\overline{CE}$ setup time	t_{ces}	0		ns	
Data hold time	t_{dh}	50		ns	
Data setup time	t_{ds}	50		ns	
Write pulse width	t_{wep}	70		ns	
$\overline{WE}$ rise time	t_r		30	ns	
$\overline{WE}$ fall time	t_f		30	ns	

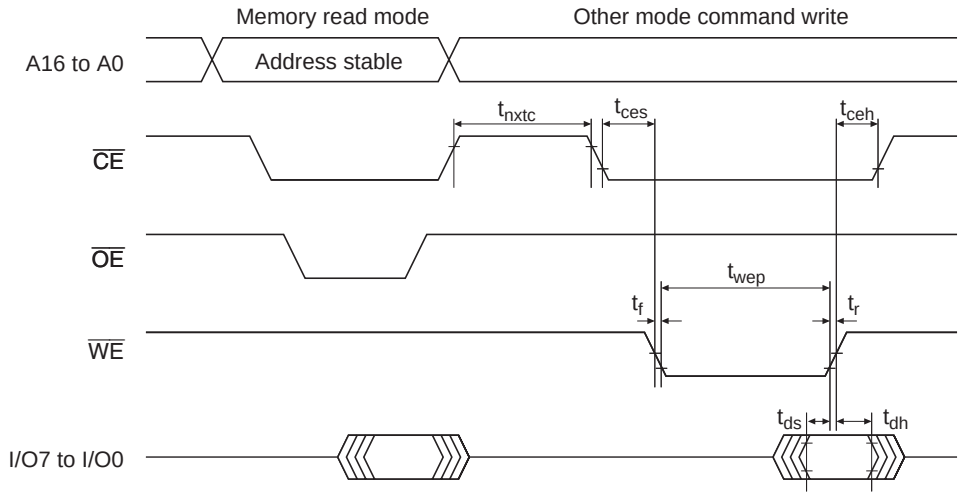

Note: Do not enable $\overline{WE}$ and $\overline{OE}$ at the same time.

Figure 18.21 Timing Waveforms in Transition from Memory Read Mode to Another Mode

Table 18.15 AC Characteristics in Memory Read Mode

Conditions: V_{CC} = 5.0 V ±10%, V_{SS} = 0 V, T_a = 25°C ±5°C

Item	Symbol	Min	Max	Unit	Notes
Access time	t_{acc}		20	μs	
$\overline{CE}$ output delay time	t_{ce}		150	ns	
$\overline{OE}$ output delay time	t_{oe}		150	ns	
Output disable delay time	t_{df}		100	ns	
Data output hold time	t_{oh}	5		ns	

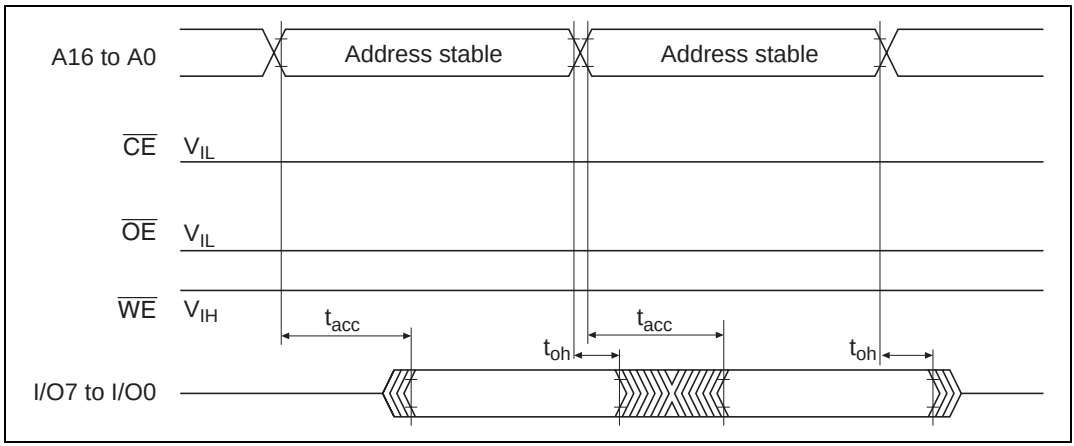

Figure 18.22 $\overline{CE}$ and $\overline{OE}$ Enable State Read Timing Waveforms

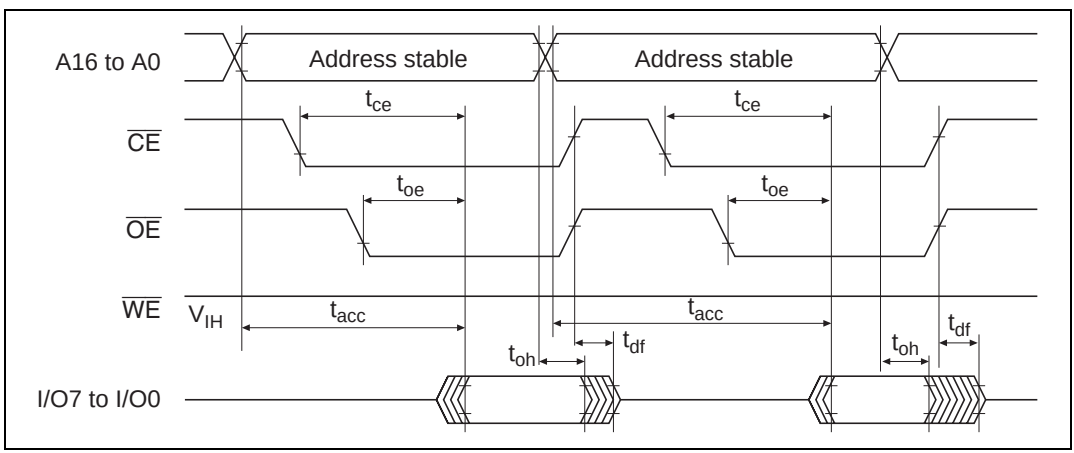

Figure 18.23 $\overline{CE}$ and $\overline{OE}$ Clock System Read Timing Waveforms

18.11.4 Auto-Program Mode

1. In auto-program mode, 128 bytes are programmed simultaneously. This should be carried out by executing 128 consecutive byte transfers.
2. A 128-byte data transfer is necessary even when programming fewer than 128 bytes. In this case, H'FF data must be written to the extra addresses.
3. The lower 8 bits of the transfer address must be H'00, H'80. If a value other than an effective address is input, processing will switch to a memory write operation but a write error will be flagged.
4. Memory address transfer is performed in the second cycle (figure 18.24). Do not perform transfer after the third cycle.
5. Do not perform a command write during a programming operation.
6. Perform one auto-program operation for a 128-byte block for each address. Two or more additional programming operations cannot be performed on a previously programmed address block.
7. Confirm normal end of auto-programming by checking I/O6. Alternatively, status read mode can also be used for this purpose (I/O7status polling uses the auto-program operation end identification pin).
8. Status polling I/O6 and I/O7 pin information is retained until the next command write. As long as the next command write has not been performed, reading is possible by enabling $\overline{CE}$ and $\overline{OE}$.

Table 18.16 AC Characteristics in Auto-Program Mode

Conditions: V_{CC} = 5.0 V ±10%, V_{SS} = 0 V, T_a = 25°C ±5°C

Item	Symbol	Min	Max	Unit	Notes
Command write cycle	t_{nxtc}	20		μs	
$\overline{CE}$ hold time	t_{ceh}	0		ns	
$\overline{CE}$ setup time	t_{ces}	0		ns	
Data hold time	t_{dh}	50		ns	
Data setup time	t_{ds}	50		ns	
Write pulse width	t_{wep}	70		ns	
Status polling start time	t_{wsts}	1		ms	
Status polling access time	t_{spa}		150	ns	
Address setup time	t_{as}	0		ns	
Address hold time	t_{ah}	60		ns	
Memory write time	t_{write}	1	3000	ms	
Write setup time	t_{pns}	100		ns	
Write end setup time	t_{pnh}	100		ns	
$\overline{WE}$ rise time	t_r		30	ns	
$\overline{WE}$ fall time	t_f		30	ns	

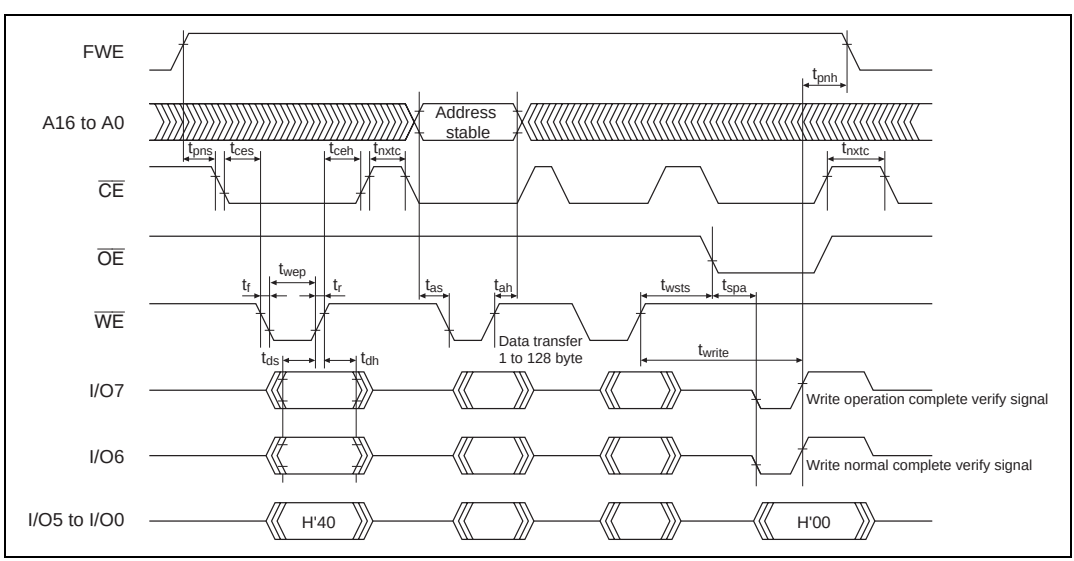

Figure 18.24 Auto-Program Mode Timing Waveforms

18.11.5 Auto-Erase Mode

1. Auto-erase mode supports only entire memory erasing.
2. Do not perform a command write during auto-erasing.
3. Confirm normal end of auto-erasing by checking I/O6. Alternatively, status read mode can also be used for this purpose (I/O7 status polling uses the auto-erase operation end identification pin).
4. Status polling I/O6 and I/O7 pin information is retained until the next command write. As long as the next command write has not been performed, reading is possible by enabling $\overline{CE}$ and $\overline{OE}$.

Table 18.17 AC Characteristics in Auto-Erase Mode

Conditions: V_{CC} = 5.0 V ±10%, V_{SS} = 0 V, T_a = 25°C ±5°C

Item	Symbol	Min	Max	Unit	Notes
Command write cycle	t_{nxtc}	20		μs	
$\overline{CE}$ hold time	t_{ceh}	0		ns	
$\overline{CE}$ setup time	t_{ces}	0		ns	
Data hold time	t_{dh}	50		ns	
Data setup time	t_{ds}	50		ns	
Write pulse width	t_{wep}	70		ns	
Status polling start time	t_{ests}	1		ms	
Status polling access time	t_{spa}		150	ns	
Memory erase time	t_{erase}	100	40000	ms	
Erase setup time	t_{ens}	100		ns	
Erase end setup time	t_{enh}	100		ns	
$\overline{WE}$ rise time	t_r		30	ns	
$\overline{WE}$ fall time	t_f		30	ns	

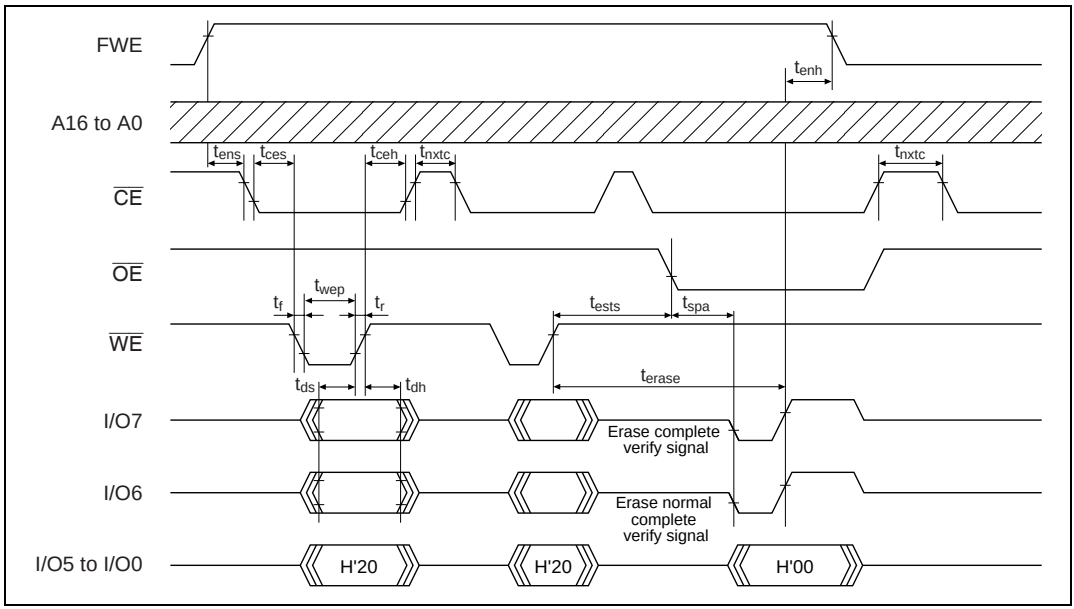

Figure 18.25 Auto-Erase Mode Timing Waveforms

18.11.6 Status Read Mode

1. Status read mode is provided to specify the kind of abnormal end. Use this mode when an abnormal end occurs in auto-program mode or auto-erase mode.
2. The return code is retained until a command write other than a status read mode command write is executed.

Table 18.18 AC Characteristics in Status Read Mode

Conditions: V_{CC} = 5.0 V ±10%, V_{SS} = 0 V, T_a = 25°C ±5°C

Item	Symbol	Min	Max	Unit	Notes
Read time after command write	t_{strd}	20		μs	
$\overline{CE}$ hold time	t_{ceh}	0		ns	
$\overline{CE}$ setup time	t_{ces}	0		ns	
Data hold time	t_{dh}	50		ns	
Data setup time	t_{ds}	50		ns	
Write pulse width	t_{wep}	70		ns	
$\overline{OE}$ output delay time	t_{oe}		150	ns	
Disable delay time	t_{df}		100	ns	
$\overline{CE}$ output delay time	t_{ce}		150	ns	
$\overline{WE}$ rise time	t_r		30	ns	
$\overline{WE}$ fall time	t_f		30	ns	

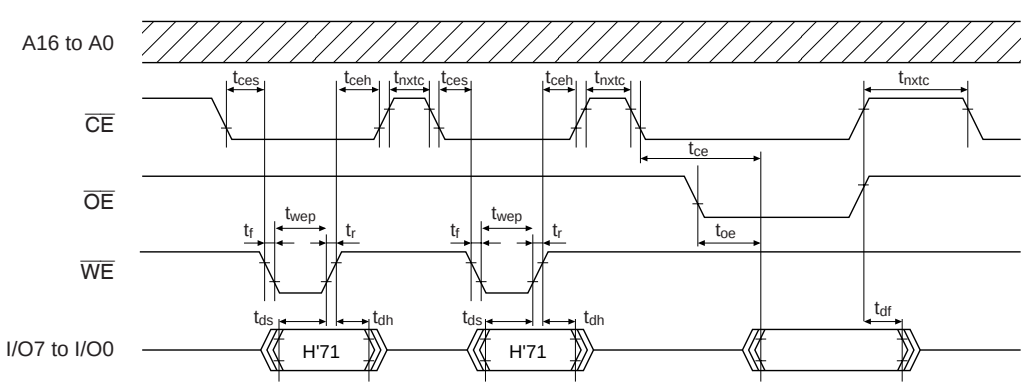

Figure 18.26 Status Read Mode Timing Waveforms

Table 18.19 Status Read Mode Return Commands

Pin Name	I/O7	I/O6	I/O5	I/O4	I/O3	I/O2	I/O1	I/O0
Attribute	Normal end identification	Command error	Programming error	Erase error	—	—	Programming or erase count exceeded	Effective address error
Initial value	0	0	0	0	0	0	0	0
Indications	Normal end: 0 Abnormal end: 1	Command Error: 1 Otherwise: 0	Programming Error: 1 Otherwise: 0	Erasing Error: 1 Otherwise: 0	—	—	Count exceeded: 1 Otherwise: 0	Effective address Error: 1 Otherwise: 0

Note: I/O2 and I/O3 are undefined at present.

18.11.7 Status Polling

1. I/O7 status polling is a flag that indicates the operating status in auto-program/auto-erase mode.
2. I/O6 status polling is a flag that indicates a normal or abnormal end in auto-program/auto-erase mode.

Table 18.20 Status Polling Output Truth Table

Pin Name	During Internal Operation	Abnormal End	—	Normal End
I/O7	0	1	0	1
I/O6	0	0	1	1
I/O0 to I/O5	0	0	0	0

18.11.8 Programmer Mode Transition Time

Commands cannot be accepted during the oscillation stabilization period or the programmer mode setup period. After the programmer mode setup time, a transition is made to memory read mode.

Table 18.21 Stipulated Transition Times to Command Wait State

Item	Symbol	Min	Max	Unit	Notes
Standby release (oscillation stabilization time)	t_{osc1}	10		ms	
Programmer mode setup time	t_{bmv}	10		ms	
V_{CC} hold time	t_{dwn}	0		ms	

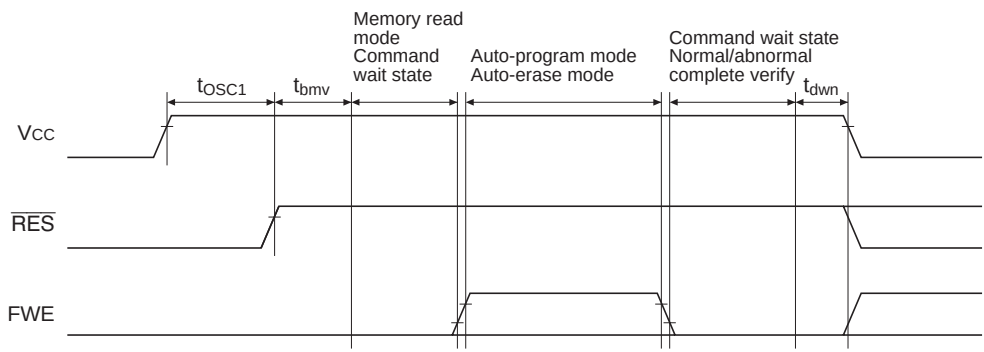

Note: For the level of FWE input pin, set V_{IL} when using other than the auto-program mode and auto-erase mode.

Figure 18.27 Oscillation Stabilization Time, Boot Program Transfer Time, and Power-Down Sequence

18.11.9 Notes on Memory Programming

1. When programming addresses which have previously been programmed, carry out auto-erasing before auto-programming.
2. When performing programming using PROM mode on a chip that has been programmed/erased in an on-board programming mode, auto-erasing is recommended before carrying out auto-programming.

Notes: 1. The flash memory is initially in the erased state when the device is shipped by Renesas Technology. For other chips for which the erasure history is unknown, it is recommended that auto-erasing be executed to check and supplement the initialization (erase) level.

2. Auto-programming should be performed once only on the same address block. Additional programming cannot be performed on previously programmed address blocks.

Section 19 Mask ROM

19.1 Overview

This LSI is available with 64 kbytes or 128 kbytes of on-chip ROM. The on-chip ROM is connected to the CPU, direct memory access controller (DMAC) through a 32-bit data bus (figures 19.1 and 19.2). The CPU and DMAC can access the on-chip ROM in 8, 16 and 32-bit widths. Data in the on-chip ROM can always be accessed in one cycle.

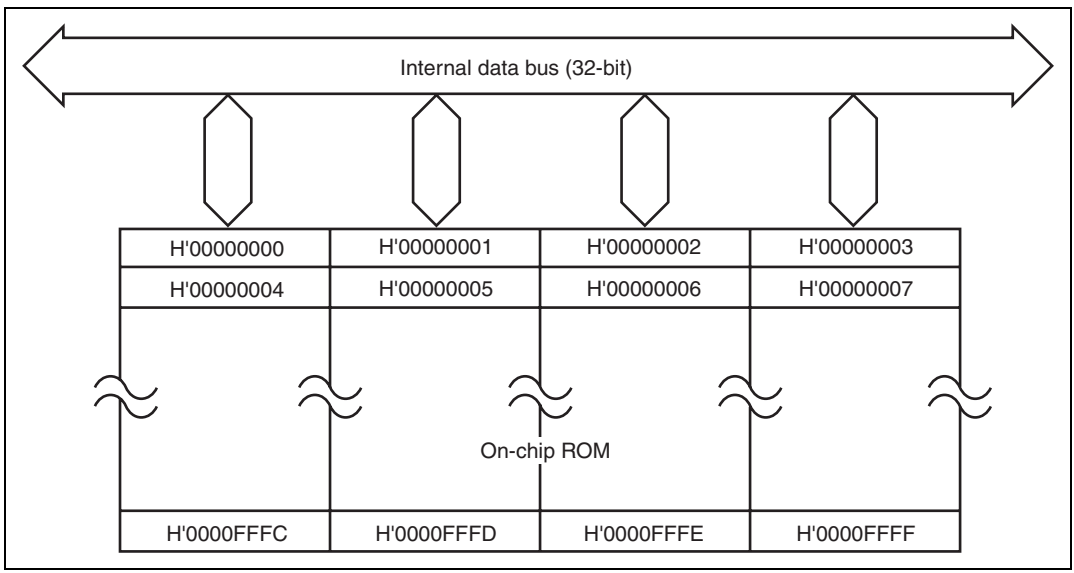

Figure 19.1 Mask ROM Block Diagram (64 kbyte version)

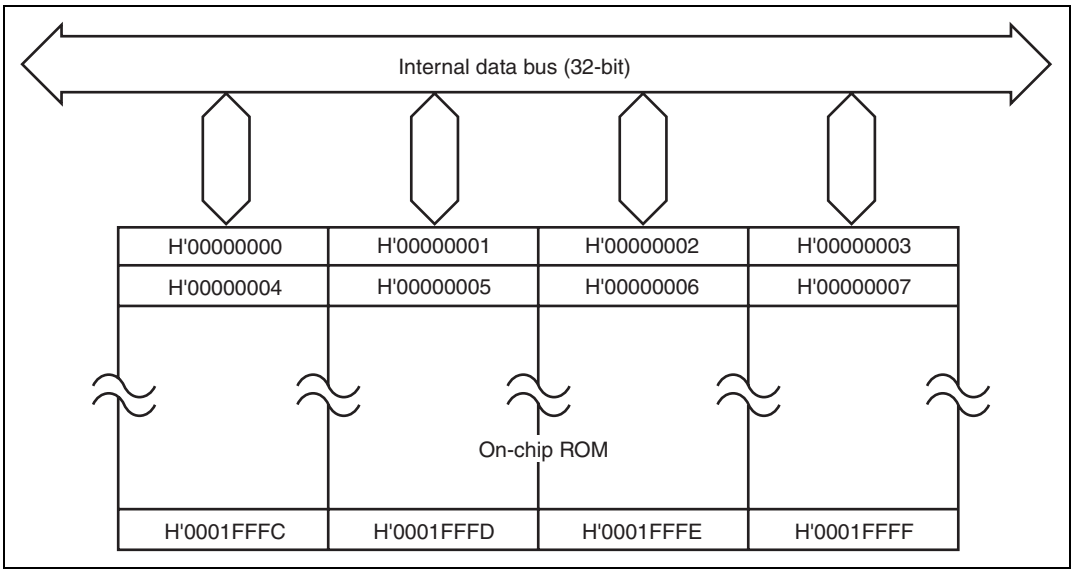

Figure 19.2 Mask ROM Block Diagram (128 kbyte version)

The operating mode determines whether the on-chip ROM is valid or not. The operating mode is selected using mode-setting pins MD3 to MD0 as shown in table 19.1. If you are using the on-chip ROM, select mode 2 or mode 3; if you are not, select mode 0 or 1. The on-chip ROM is allocated to addresses H'00000000 to H'0000FFFF of memory area 0 for the 64 kbyte version and H'00000000 to H'0001FFFF of memory area 0 for the 128 kbyte version.

Table 19.1 Operation Modes and ROM

	Mode Setting Pin				
Operation Mode	**MD3**	**MD2**	**MD1**	**MD0**	**Area 0**
Mode 0 (MCU mode 0)	*	*	0	0	On-chip ROM invalid, external 8-bit space
Mode 1 (MCU mode 1)	*	*	0	1	On-chip ROM invalid, external 16-bit space
Mode 2 (MCU mode 2)	*	*	1	0	On-chip ROM valid, external space (bus width set with bus state controller)
Mode 3 (MCU mode 3)	*	*	1	1	On-chip ROM valid, single-chip mode

Legend:
0: Low
1: High
Note: * Refer to section 3, Operating Modes.

Section 20 RAM

20.1 Overview

The SH7014 and SH7016 have 3 kbytes of on-chip RAM, and the SH7017 has 4 kbytes. The on-chip RAM is linked to the CPU and direct memory access controller (DMAC) with a 32-bit data bus (figure 20.1). The CPU can access data in the on-chip RAM in 8, 16, or 32 bit widths. The DMAC can access 8 or 16 bit widths. On-chip RAM data can always be accessed in one state, making the RAM ideal for use as a program area, stack area, or data area, which require high-speed access. The contents of the on-chip RAM are held in both the sleep and standby modes. Memory area 0 addresses H'FFFFF000 to H'FFFFFBFF (SH7014, SH7016) or H'FFFFF000 to H'FFFFFFFF (SH7017) are allocated to the on-chip RAM.

The on-chip RAM is also used as cache memory. When the cache is used, 1 kbyte of on-chip RAM is available in the SH7014 and SH7016, and 2 kbytes in the SH7017. See section 7, Cache Memory, for details.

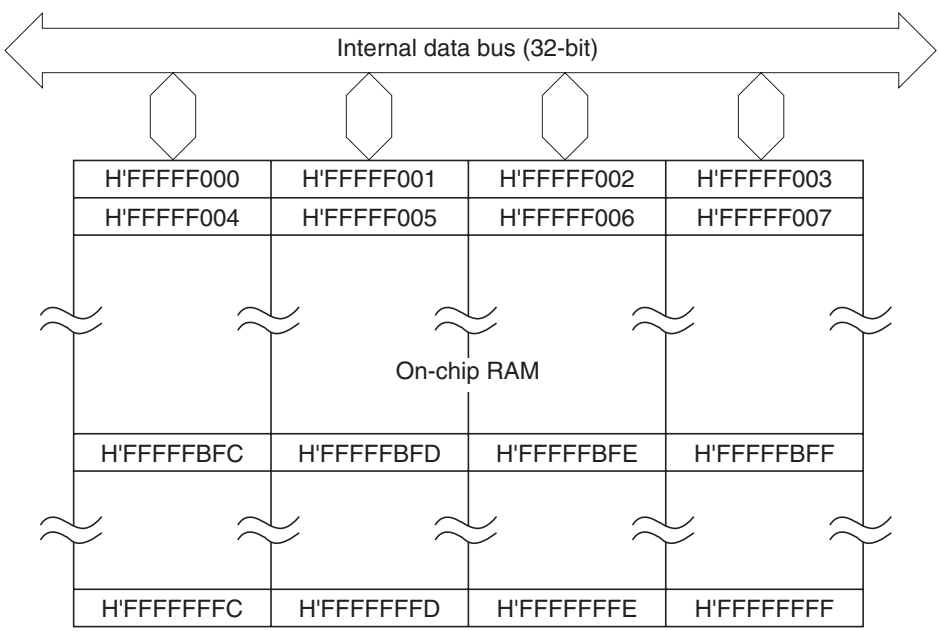

Note: Operation is not guaranteed if addresses H'FFFFFC00 to H'FFFFFFFF are accessed in the SH7014 or SH7016.

Figure 20.1 Block Diagram of RAM

Section 21 Power-Down State

21.1 Overview

In the power-down state, the CPU functions are halted. This enables a great reduction in power consumption.

21.1.1 Power-Down States

The power-down state is effected by the following two modes:

- Sleep mode
- Standby mode

Table 21.1 describes the transition conditions for entering the modes from the program execution state as well as the CPU and peripheral function status in each mode and the procedures for canceling each mode.

Table 21.1 Power-Down State Conditions

Mode	Entering Procedure	State: Clock	CPU	On-Chip Peripheral Modules	CPU Registers	RAM	I/O Ports	Canceling Procedure
Sleep	Execute SLEEP instruction with SBY bit set to 0 in SBYCR	Run	Halt	Run	Held	Held	Held	• Interrupt • DMAC address error • Power-on reset
Stand-by	Execute SLEEP instruction with SBY bit set to 1 in SBYCR	Halt	Halt	Halt*[1]	Held	Held	Held or high impe-dance*[2]	• NMI interrupt • Power-on reset

Legend:

SBYCR: standby control register

SBY: standby bit

Notes: 1. Some bits within on-chip peripheral module registers are initialized by the standby mode; some are not. Refer to table 21.3, Register States in the Standby Mode, in section 21.4.1, Transition to Standby Mode. Also refer to the register descriptions for each peripheral module.

2. The status of the I/O port in standby mode is set by the port high impedance bit (HIZ) of the SBYCR. Refer to section 21.2, Standby Control Register. For pin status other than for the I/O port, refer to Appendix C, Pin Status.

21.1.2 Related Register

Table 21.2 shows the register used for power-down state control.

Table 21.2 Related Register

Name	Abbreviation	R/W	Initial Value	Address	Access Size
Standby control register	SBYCR	R/W	H'1F	H'FFFF8614	8, 16, 32

21.2 Standby Control Register (SBYCR)

The standby control register (SBYCR) is a read/write 8-bit register that sets the transition to standby mode, and the port status in standby mode. The SBYCR is initialized to H'1F when reset.

Bit:	7	6	5	4	3	2	1	0
	SBY	HIZ	—	—	—	—	—	—
Initial value:	0	0	0	1	1	1	1	1
R/W:	R/W	R/W	R	R	R	R	R	R

Bit 7—Standby (SBY): Specifies transition to the standby mode. The SBY bit cannot be set to 1 while the watchdog timer is running (when the timer enable bit (TME) of the WDT timer control/status register (TCSR) is set to 1). To enter the standby mode, always halt the WDT by 0 clearing the TME bit, then set the SBY bit.

Bit 7 SBY	Description	
0	Executing SLEEP instruction puts the LSI into sleep mode	(initial value)
1	Executing SLEEP instruction puts the LSI into standby mode	

Bit 6—Port High Impedance (HIZ): In the standby mode, this bit selects whether to set the I/O port pin to high impedance or hold the pin status. The HIZ bit cannot be set to 1 when the TME bit of the WDT timer control/status register (TCSR) is set to 1. When making the I/O port pin status high impedance, always clear the TME bit to 0 before setting the HIZ bit.

Bit 6 HIZ	Description	
0	Holds pin status while in standby mode	(initial value)
1	Keeps pin at high impedance while in standby mode	

Bits 5 to 0—Reserved: Bit 5 always reads as 0. Always write 0 to bit 5. Bits 4 to 0 always read as 1. Always write 1 to these bits.

21.3 Sleep Mode

21.3.1 Transition to Sleep Mode

Executing the SLEEP instruction when the SBY bit of SBYCR is 0 causes a transition from the program execution state to the sleep mode. Although the CPU halts immediately after executing the SLEEP instruction, the contents of its internal registers remain unchanged. The on-chip peripheral modules continue to run during the sleep mode.

21.3.2 Canceling Sleep Mode

Sleep mode is canceled by an interrupt, DMAC address error, or power-on reset.

Cancellation by an Interrupt: When an interrupt occurs, the sleep mode is canceled and interrupt exception processing is executed. The sleep mode is not canceled if the interrupt cannot be accepted because its priority level is equal to or less than the mask level set in the CPU's status register (SR) or if an interrupt by an on-chip peripheral module is disabled at the peripheral module.

Cancellation by a DMAC Address Error: If a DMAC address error occurs, the sleep mode is canceled and DMAC address error exception processing is executed.

Cancellation by a Power-On Reset: A power-on reset resulting from setting the $\overline{\text{RES}}$ pin to low level cancels the sleep mode.

21.4 Standby Mode

21.4.1 Transition to Standby Mode

To enter the standby mode, set the SBY bit to 1 in SBYCR, then execute the SLEEP instruction. The LSI moves from the program execution state to the standby mode. In the standby mode, power consumption is greatly reduced by halting not only the CPU, but the clock and on-chip peripheral modules as well. CPU register contents and on-chip RAM data are held as long as the prescribed voltages are applied. The register contents of some on-chip peripheral modules are initialized, but some are not (table 21.3). The I/O port status can be selected as held or high impedance by the port high impedance bit (HIZ) of the SBYCR. For pin status other than for the I/O port, refer to Appendix B, Pin Status.

Table 21.3 Register States in the Standby Mode

Module	Registers Initialized	Registers that Retain Data	Registers with Undefined Contents
Interrupt controller (INTC)	—	All registers	—
Cache memory (CAC)	—	All registers	—
Bus state controller (BSC)	—	All registers	—
Direct memory access controller (DMAC)	• DMA channel control registers 0, 1 (CHCR0, CHCR1) • DMA operation register (DMAOR)	—	• DMA source address registers 0, 1 (SAR0, SAR1) • DMA destination address registers 0, 1 (DAR0, DAR1) • DMA transfer count registers 0, 1 (DMATCR0, DMATCR1)
Multifunction timer pulse unit (MTU)	MTU associated registers	—	—
Watchdog timer (WDT)	• Bits 7 to 5 (OVF, WT/$\overline{\text{IT}}$, TME) of the timer control status register (TCSR) • Reset control/status register (RSTCSR)	• Bits 2 to 0 (CKS2 to CKS0) of the TCSR • Timer counter (TCNT)	—
Serial communication interface (SCI)	• Receive data register (RDR) • Transmit data register (TDR) • Serial mode register (SMR) • Serial control register (SCR) • Serial status register (SSR) • Bit rate register (BBR)	—	—
A/D converter (A/D)	All registers	—	—
Compare match timer (CMT)	All registers	—	—
Pin function controller (PFC)	—	All registers	—

Module	Registers Initialized	Registers that Retain Data	Registers with Undefined Contents
I/O port (I/O)	—	All registers	—
Power-down state related	—	Standby control register (SBYCR)	—

21.4.2 Canceling the Standby Mode

The standby mode is canceled by an NMI interrupt or a power-on reset.

Cancellation by an NMI: Clock oscillation starts when a rising edge or falling edge (selected by the NMI edge select bit (NMIE) of the interrupt control register (ICR) of the INTC) is detected in the NMI signal. This clock is supplied only to the watchdog timer (WDT). A WDT overflow occurs if the time established by the clock select bits (CKS2 to CKS0) in the TCSR of the WDT elapses before transition to the standby mode. The occurrence of this overflow is used to indicate that the clock has stabilized, so the clock is supplied to the entire chip, the standby mode is canceled, and NMI exception processing begins.

When canceling standby mode with NMI interrupts, set the CKS2 to CKS0 bits so that the WDT overflow period is longer than the oscillation stabilization time.

When canceling standby mode with an NMI pin set for falling edge, be sure that the NMI pin level upon entering standby (when the clock is halted) is high level, and that the NMI pin level upon returning from standby (when the clock starts after oscillation stabilization) is low level. When canceling standby mode with an NMI pin set for rising edge, be sure that the NMI pin level upon entering standby (when the clock is halted) is low level, and that the NMI pin level upon returning from standby (when the clock starts after oscillation stabilization) is high level.

Cancellation by a Power-On Reset: A power-on reset caused by setting the $\overline{\text{RES}}$ pin to low level cancels the standby mode.

21.4.3 Standby Mode Application Example

This example describes a transition to standby mode on the falling edge of an NMI signal, and a cancellation on the rising edge of the NMI signal. The timing is shown in figure 21.1.

When the NMI pin is changed from high to low level while the NMI edge select bit (NMIE) of the ICR is set to 0 (falling edge detection), the NMI interrupt is accepted. When the NMIE bit is set to 1 (rising edge detection) by an NMI exception service routine, the standby bit (SBY) of the SBYCR is set to 1, and a SLEEP instruction is executed, standby mode is entered. Thereafter, standby mode is canceled when the NMI pin is changed from low to high level.

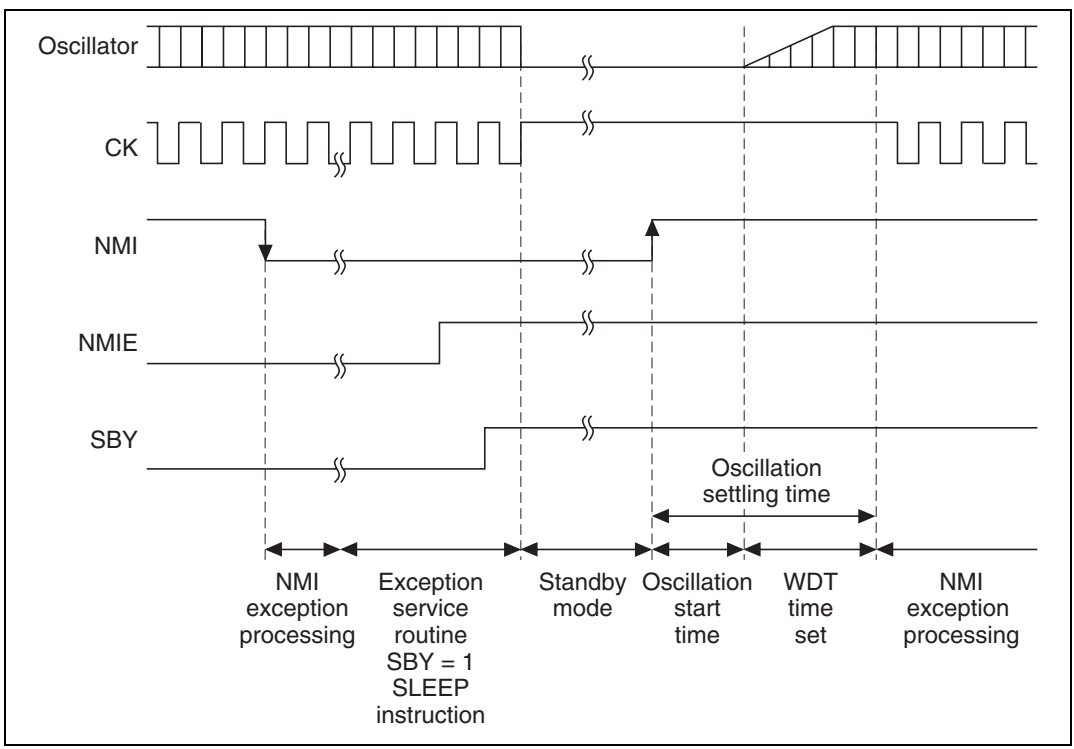

Figure 21.1 Standby Mode NMI Timing (Application Example)

Section 22 Electrical Characteristics (5 V 28.7 MHz)

22.1 Absolute Maximum Ratings

Table 22.1 shows the absolute maximum ratings.

Table 22.1 Absolute Maximum Ratings

Item	Symbol	Rating	Unit
Power supply voltage	V_{CC}	–0.3 to +7.0	V
Input voltage (other than A/D ports)	V_{in}	–0.3 to V_{CC} +0.3	V
Input voltage (A/D ports)	V_{in}	–0.3 to AV_{CC} +0.3	V
Analog supply voltage	AV_{CC}	–0.3 to +7.0	V
Analog input voltage	V_{AN}	–0.3 to AV_{CC} +0.3	V
Operating temperature	T_{opr}	–20 to +75	°C
Programming temperature (F-ZTAT version only)	T_{WE}	–20 to +75	°C
Storage temperature	Tstg	–55 to +125	°C

Note: Operating the LSI in excess of the absolute maximum ratings may result in permanent damage.

22.2 DC Characteristics

Table 22.2 DC Characteristics

Conditions: V_{CC} = 5.0 V ±10%, AV_{CC} = 5.0 V ±10%, AV_{CC} = V_{CC} ±10%, V_{SS} = AV_{SS} = 0 V, Ta = –20 to +75° C

Item	Pin	Symbol	Min	Typ	Max	Unit	Measurement Conditions
Input high-level voltage	$\overline{RES}$, NMI, MD3 to MD0, FWP, PA2, PA5, PA6 to PA9, PE0 to PE15	V_{IH}	V_{CC} –0.7	—	V_{CC} +0.3	V	—
	EXTAL		V_{CC} × 0.7	—	V_{CC} +0.3	V	—
	A/D port		2.2	—	AV_{CC} +0.3	V	—
	Other input pins		2.2	—	V_{CC} +0.3	V	—
Input low-level voltage	$\overline{RES}$, NMI, MD3 to MD0, PA2, PA5, PA6 to PA9, PE0 to PE15	V_{IL}	–0.3	—	0.5	V	—
	Other input pins		–0.3	—	0.8	V	—
Schmitt trigger input voltage	PA2, PA5, PA6 to PA9	$VT^{+} - VT^{-}$	0.4	—	—	V	$VT^{+} \geq V_{CC}$ –0.7 (max)
	PE0 to PE15						$VT^{-} \leq$ 0.5 (min)
Input leakage current	$\overline{RES}$, NMI, MD3 to MD0, PA2, PA5, PA6 to PA9, PE0 to PE15	| Iin |	—	—	1.0	μA	Vin = 0.5 to V_{CC} –0.5 V
	A/D port		—	—	1.0	μA	Vin = 0.5 to AV_{CC} –0.5 V
	Other input pins		—	—	1.0	μA	Vin = 0.5 to V_{CC} –0.5 V
Three-state leak current (while off)	A21 to A0, D15 to D0, $\overline{CS3}$ to $\overline{CS0}$, RDWR, $\overline{RAS}$, $\overline{CASx}$, $\overline{WRx}$, $\overline{RD}$, ports A, B, E	| I_{TSI} |	—	—	1.0	μA	Vin = 0.5 to V_{CC} –0.5 V

Item	Pin	Symbol	Min	Typ	Max	Unit	Measurement Conditions
Output high-level voltage	All output pins	V_{OH}	V_{CC} –0.5	—	—	V	I_{OH} = –200 μA
			3.5	—	—	V	I_{OH} = –1 mA
Output low-level voltage	All output pins	V_{OL}	—	—	0.4	V	I_{OL} = 1.6 mA
Input capacitance	$\overline{RES}$	Cin	—	—	80	pF	Vin = 0 V, f = 1 MHz, Ta = 25°C
	NMI		—	—	50	pF	
	All other input pins		—	—	20	pF	
Current consumption (SH7014)	Ordinary operation	I_{CC}	—	130	180	mA	f = 28 MHz
	Sleep		—	100	150	mA	f = 28 MHz
	Standby		—	0.01	5	μA	Ta ≤ 50°C
			—	—	20	μA	Ta > 50°C
Current consumption (SH7016, SH7017)	Ordinary operation	I_{CC}	—	140	180	mA	f = 28 MHz
	Sleep		—	110	150	mA	f = 28 MHz
	Standby		—	0.01	5	μA	Ta ≤ 50°C
			—	—	20	μA	Ta > 50°C
Analog supply current (SH7014)		AI_{CC}	—	13	22	mA	
Analog supply current (SH7016, SH7017)		AI_{CC}	—	5	10	mA	
RAM standby voltage		V_{RAM}	2.0	—	—	V	

Notes: 1. When the A/D converter is not used (including during standby), do not release the AV_{CC} and AV_{SS} pins. Connect the AV_{CC} pin to V_{CC} and the AV_{SS} pin to V_{SS}.

2. The current consumption is measured when V_{IH}min = V_{CC} –0.5 V, V_{IL} max = 0.5 V, with all output pins unloaded.

3. The F-ZTAT and mask versions have the same functions, and the electrical characteristics of both are within specification, but characteristic-related performance values, operating margins, noise margins, noise emission, etc., are different. Caution is therefore required in carrying out system design, and when switching between F-ZTAT and mask versions.

Table 22.3 Permitted Output Current Values

Conditions: V_{CC} = 5.0 V ±10%, AV_{CC} = 5.0 V ±10%, AV_{CC} = V_{CC} ±10%, V_{SS} = AV_{SS} = 0 V, Ta = –20 to +75° C

Item	Symbol	Min	Typ	Max	Unit
Output low-level permissible current (per pin)	I_{OL}	—	—	2.0	mA
Output low-level permissible current (total)	ΣI_{OL}	—	—	80	mA
Output high-level permissible current (per pin)	$-I_{OH}$	—	—	2.0	mA
Output high-level permissible current (total)	$\Sigma (-I_{OH})$	—	—	25	mA

Note: To assure LSI reliability, do not exceed the output values listed in this table.

22.3 AC Characteristics

22.3.1 Clock Timing

Table 22.4 Clock Timing

Conditions: V_{CC} = 5.0 V ±10%, AV_{CC} = 5.0 V ±10%, AV_{CC} = V_{CC} ±10%, V_{SS} = AV_{SS} = 0 V, Ta = –20 to +75° C

Item	Symbol	Min	Max	Unit	Figures
Operating frequency	f_{OP}	4	28.7	MHz	22.1
Clock cycle time	t_{cyc}	34.8	250	ns	
Clock low-level pulse width	t_{CL}	10	—	ns	
Clock high-level pulse width	t_{CH}	10	—	ns	
Clock rise time	t_{CR}	—	5	ns	
Clock fall time	t_{CF}	—	5	ns	
EXTAL clock input frequency	f_{EX}	4	10	MHz	22.2
EXTAL clock input cycle time	t_{EXcyc}	100	250	ns	
EXTAL clock low-level input pulse width	t_{EXL}	40	—	ns	
EXTAL clock high-level input pulse width	t_{EXH}	40	—	ns	
EXTAL clock input rise time	t_{EXR}	—	5	ns	
EXTAL clock input fall time	t_{EXF}	—	5	ns	
Reset oscillation settling time	t_{OSC1}	10	—	ms	22.3
Standby return clock settling time	t_{OSC2}	10	—	ms	

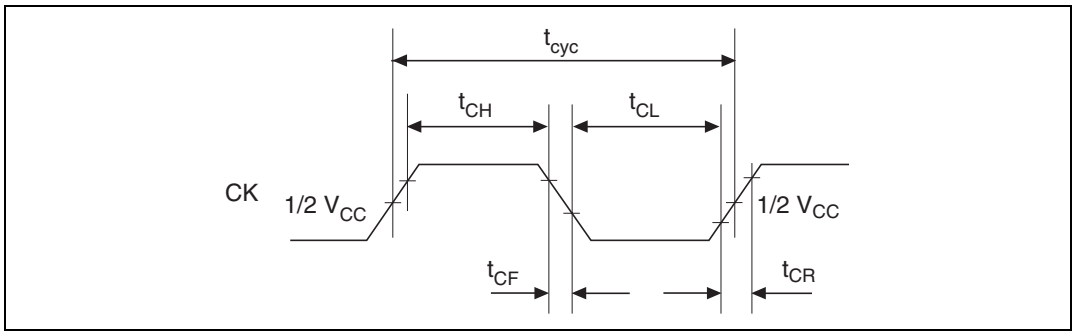

Figure 22.1 System Clock Timing

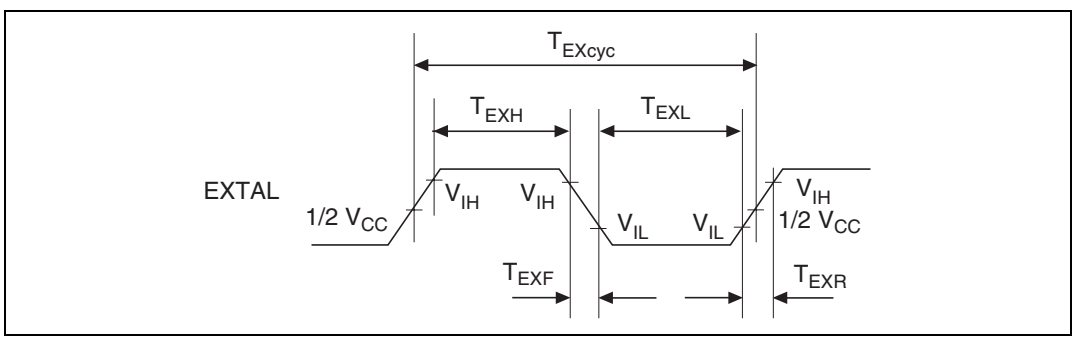

Figure 22.2 EXTAL Clock Input Timing

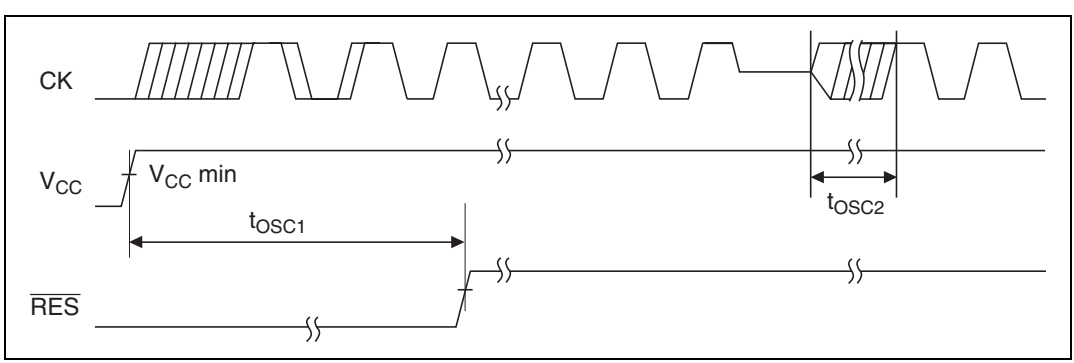

Figure 22.3 Oscillation Settling Time

22.3.2 Control Signal Timing

Table 22.5 Control Signal Timing

Conditions: V_{CC} = 5.0 V ±10%, AV_{CC} = 5.0 V ±10%, AV_{CC} = V_{CC} ±10%, V_{SS} = AV_{SS} = 0 V, Ta = –20 to +75° C

Item	Symbol	Min	Max	Unit	Figure
$\overline{RES}$ rise/fall	t_{RESr}, t_{RESf}	—	200	ns	22.4
$\overline{RES}$ pulse width	t_{RESW}	20	—	t_{cyc}	
NMI rise/fall	t_{NMIr}, t_{NMIf}	—	200	ns	
$\overline{RES}$ setup time*	t_{RESS}	35	—	ns	22.4, 22.5
NMI setup time*	t_{NMIS}	35	—	ns	
$\overline{IRQ7}$, $\overline{IRQ6}$, $\overline{IRQ3}$ to $\overline{IRQ0}$ setup time (edge detection)*	t_{IRQES}	35	—	ns	
$\overline{IRQ7}$, $\overline{IRQ6}$, $\overline{IRQ3}$ to $\overline{IRQ0}$ setup time (level detection)*	t_{IRQLS}	35	—	ns	
NMI hold time	t_{NMIH}	35	—	ns	22.5
$\overline{IRQ7}$, $\overline{IRQ6}$, $\overline{IRQ3}$ to $\overline{IRQ0}$ hold time	t_{IRQEH}	35	—	ns	

Note: * The $\overline{RES}$, NMI, $\overline{IRQ7}$, $\overline{IRQ6}$, and $\overline{IRQ3}$ to $\overline{IRQ0}$ signals are asynchronous inputs, but when the setup times shown here are provided, the signals are considered to have produced changes at clock rise (for $\overline{RES}$) or clock fall (for NMI, $\overline{IRQ7}$, $\overline{IRQ6}$, and $\overline{IRQ3}$ to $\overline{IRQ0}$). If the setup times are not provided, recognition is delayed until the next clock rise or fall.

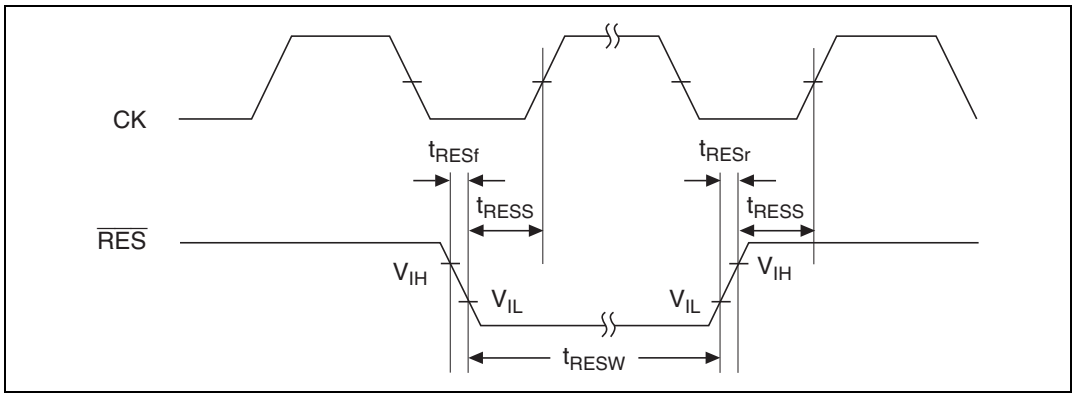

Figure 22.4 Reset Input Timing

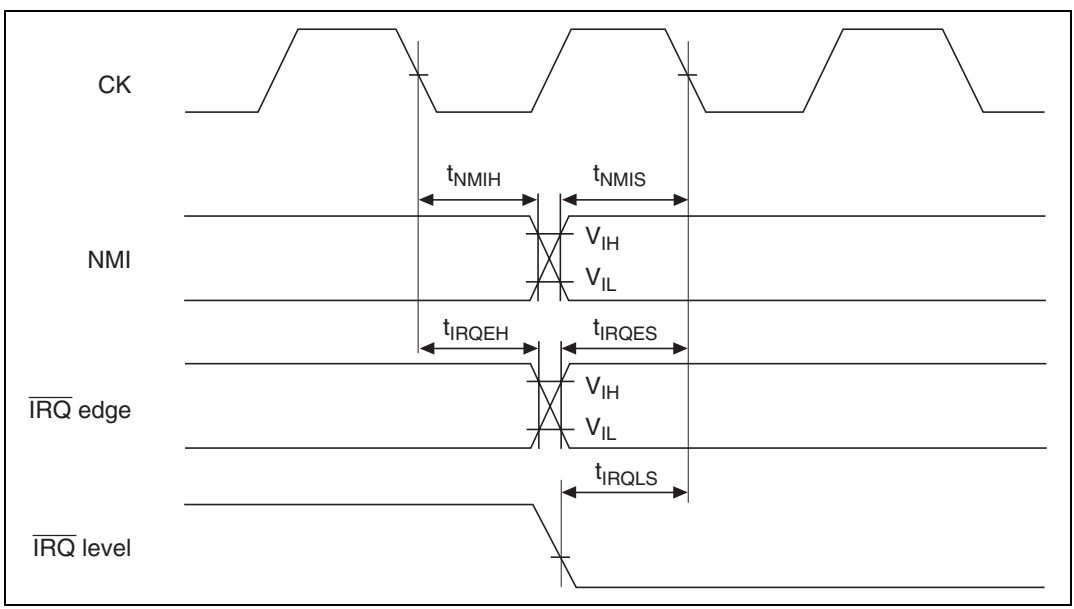

Figure 22.5 Interrupt Signal Input Timing

22.3.3 Bus Timing

Table 22.6 Bus Timing

Conditions: V_{CC} = 5.0 V ±10%, AV_{CC} = V_{CC} ±10%, AV_{CC} = 5.0 V ±10%, V_{SS} = AV_{SS} = 0 V, Ta = –20 to +75°C

Item	Symbol	Min	Max	Unit	Figure
Address delay time	t_{AD}	2*3	18	ns	22.6, 22.7, 22.9 to 22.14, 22.17
$\overline{CS}$ delay time 1	t_{CSD1}	2*3	21	ns	22.6, 22.7, 22.17
$\overline{CS}$ delay time 2	t_{CSD2}	2*3	21	ns	
Read strobe delay time 1	t_{RSD1}	2*3	18	ns	22.6, 22.7, 22.9 to 22.14, 22.17
Read strobe delay time 2	t_{RSD2}	2*3	18	ns	
Read data setup time	t_{RDS}*4	15	—	ns	
Read data hold time	t_{RDH}	0	—	ns	
Write strobe delay time 1	t_{WSD1}	2*3	18	ns	
Write strobe delay time 2	t_{WSD2}	2*3	18	ns	
Write data delay time	t_{WDD}	—	35	ns	
Write data hold time	t_{WDH}	0	10*2	ns	
$\overline{WAIT}$ setup time	t_{WTS}	15	—	ns	22.8, 22.13, 22.17
$\overline{WAIT}$ hold time	t_{WTH}	0	—	ns	
$\overline{RAS}$ delay time 1	t_{RASD1}	2*3	18	ns	22.9 to 22.16
$\overline{RAS}$ delay time 2	t_{RASD2}	2*3	18	ns	
$\overline{CAS}$ delay time 1	t_{CASD1}	2*3	18	ns	
$\overline{CAS}$ delay time 2	t_{CASD2}	2*3	18	ns	
Read data access time	t_{ACC}*1	$t_{cyc} \times (n + 2) - 40$	—	ns	22.6, 22.7
Access time from read strobe	t_{OE}*1	$t_{cyc} \times (n + 1.5) - 40$	—	ns	
Access time from column address	t_{AA}*1	$t_{cyc} \times (n + 2) - 40$	—	ns	22.9 to 22.14
Access time from $\overline{RAS}$	t_{RAC}*1	$t_{cyc} \times (n + RCD + 2.5) - 40$	—	ns	
Access time from $\overline{CAS}$	t_{CAC}*1	$t_{cyc} \times (n + 1) - 40$	—	ns	
Row address hold time	t_{RAH}	$t_{cyc} \times (RCD + 0.5) - 15$	—	ns	
Row address setup time	t_{ASR}*5	$t_{cyc} \times 0.5 - 17.5$	—	ns	
Data input setup time	t_{DS}	$t_{cyc} \times (m + 0.5) - 25$	—	ns	
Data input hold time	t_{DH}	20	—	ns	

Notes: n is the number of waits. m is 0 when the number of DRAM write cycle waits is 0, and 1 otherwise. RCD is the set value of the RCD bit in DCR.

1. If the access time is satisfied, t_{RDS} need not be satisfied.
2. t_{WDH} (max) is a reference value.
3. The delay time Min values are reference values (typ).
4. t_{RDS} is a reference value.
5. At 28.7 MHz, t_{ASR} = 0 ns (min)

Table 22.7 Bus Timing

Conditions: V_{CC} = 5.0 V ±10%, AV_{CC} = 5.0 V ±10%, AV_{CC} = V_{CC}±10%, V_{SS} = AV_{SS} = 0 V, Ta = –20 to +75°C

Item	Symbol	Min	Max	Unit	Figure
Write address setup time	t_{AS}	0	—	ns	22.6 to 22.7
Write address hold time	t_{WR}	5	—	ns	
Write data hold time	t_{WRH}	0	—	ns	
Read/write strobe delay time 1	t_{RWD1}	2*	18	ns	22.9 to 22.14
Read/write strobe delay time 2	t_{RWD2}	2*	18	ns	
High-speed page mode $\overline{CAS}$ precharge time	t_{CP}	t_{cyc} –25	—	ns	22.14
$\overline{RAS}$ precharge time	t_{RP}	t_{cyc} × (TPC + 1.5) – 15	—	ns	22.9 to 22.14
$\overline{CAS}$ setup time	t_{CSR}	10	—	ns	22.15, 22.16
$\overline{AH}$ delay time 1	t_{AHD1}	2*	18	ns	22.17
$\overline{AH}$ delay time 2	t_{AHD2}	2*	18	ns	
Multiplex address delay time	t_{MAD}	2*	18	ns	
Multiplex address hold time	t_{MAH}	0	—	ns	
DACK delay time	t_{DACKD1}	2*	21	ns	22.6, 22.7, 22.9 to 22.14, 22.17

Notes: TPC is the set value of the TPC bit in DCR.

* The delay time Min values are reference values (typ).)

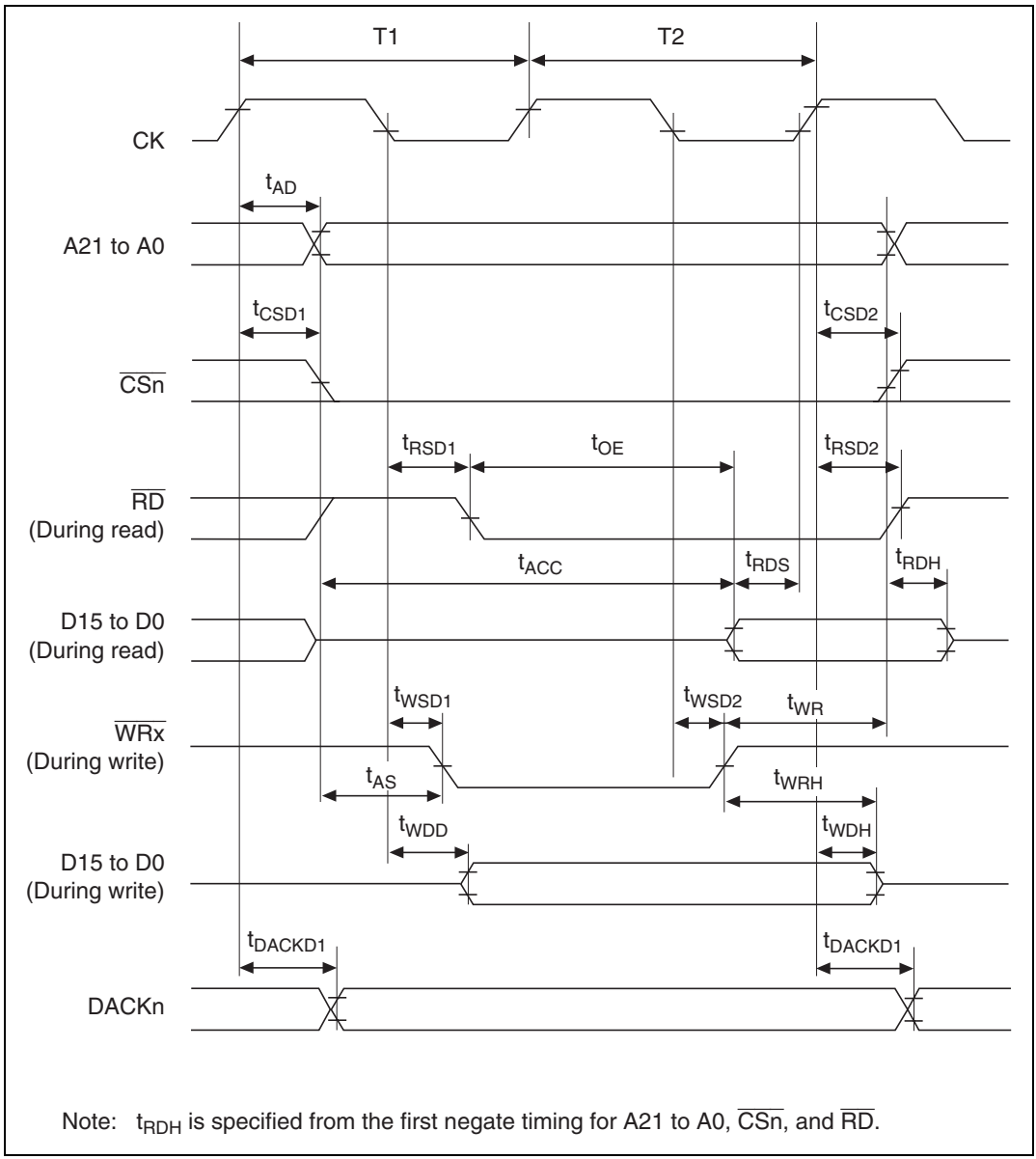

Note: t_{RDH} is specified from the first negate timing for A21 to A0, $\overline{CSn}$, and $\overline{RD}$.

Figure 22.6 Basic Cycle (No Waits)

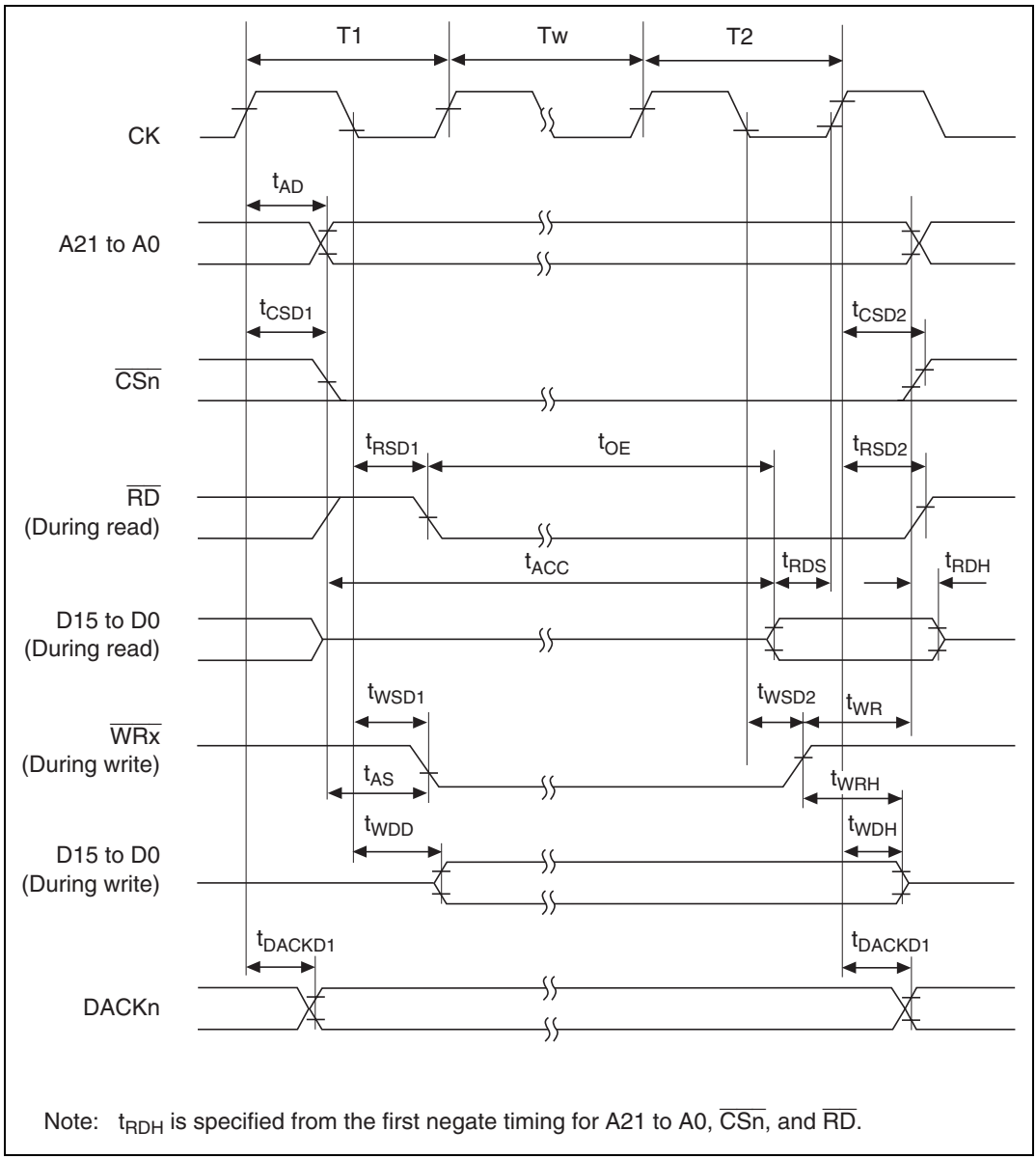

Figure 22.7 Basic Cycle (Software Waits)

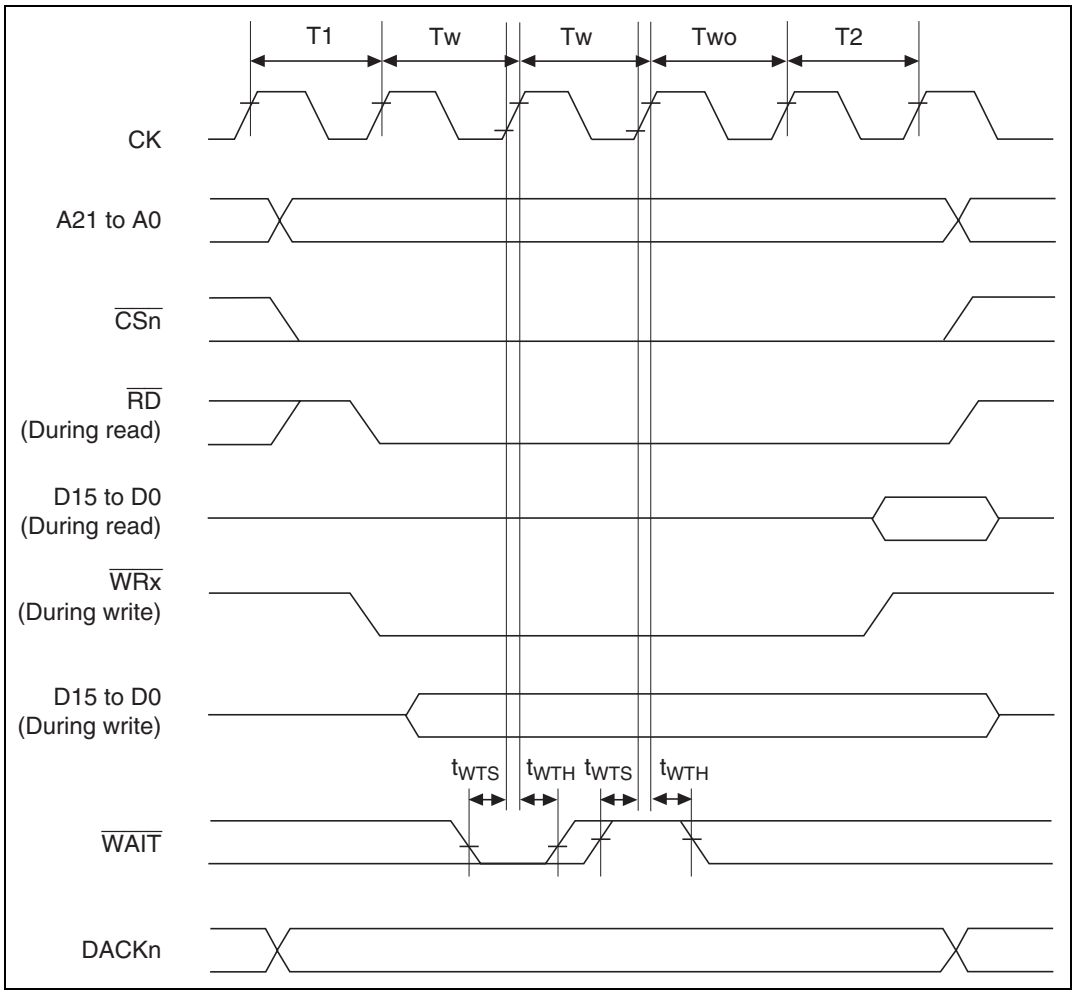

Figure 22.8 Basic Cycle (2 Software Waits + Wait due to $\overline{\text{WAIT}}$ Signal)

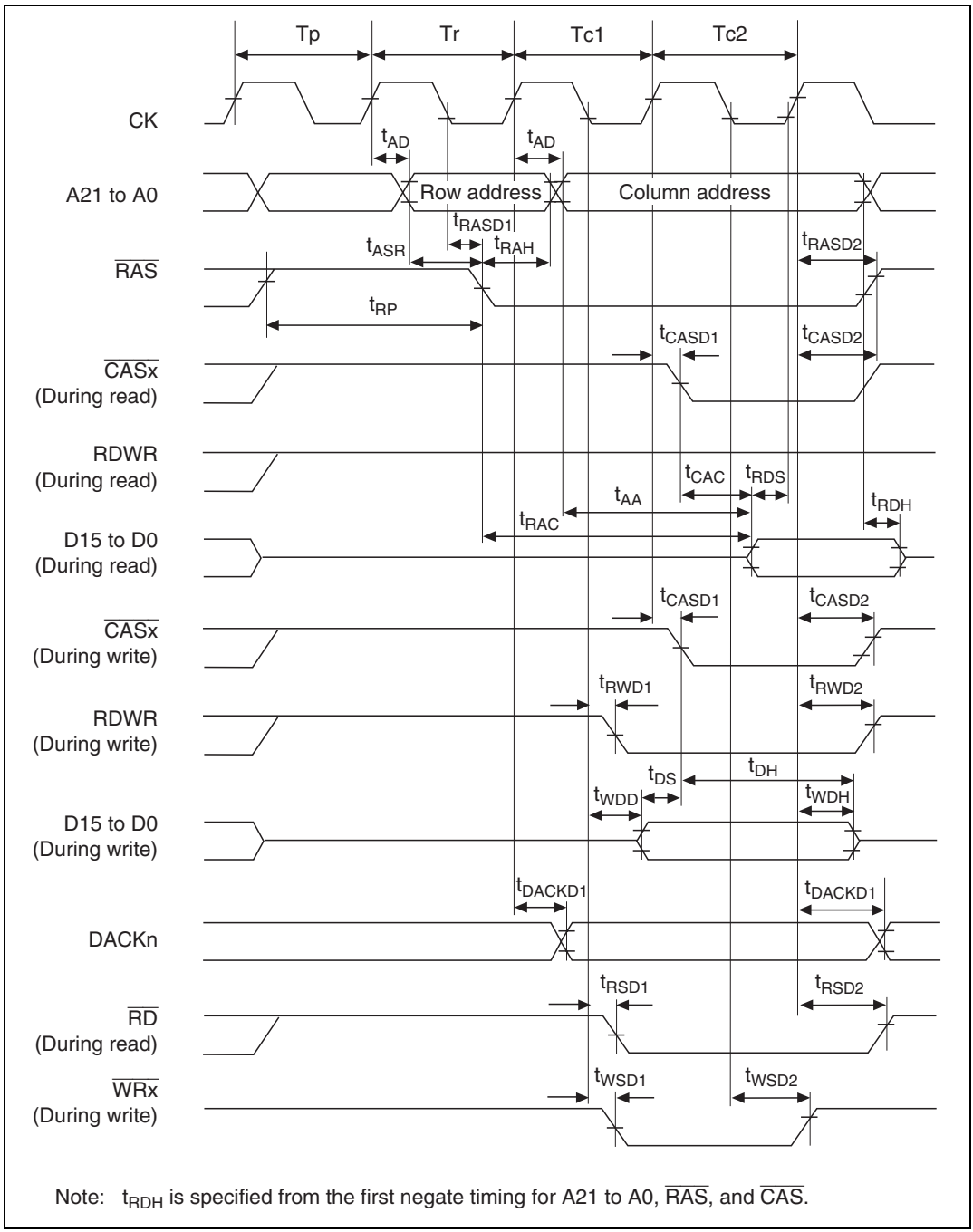

Note: t_{RDH} is specified from the first negate timing for A21 to A0, $\overline{RAS}$, and $\overline{CAS}$.

Figure 22.9 DRAM Cycle (Normal Mode, No Waits)

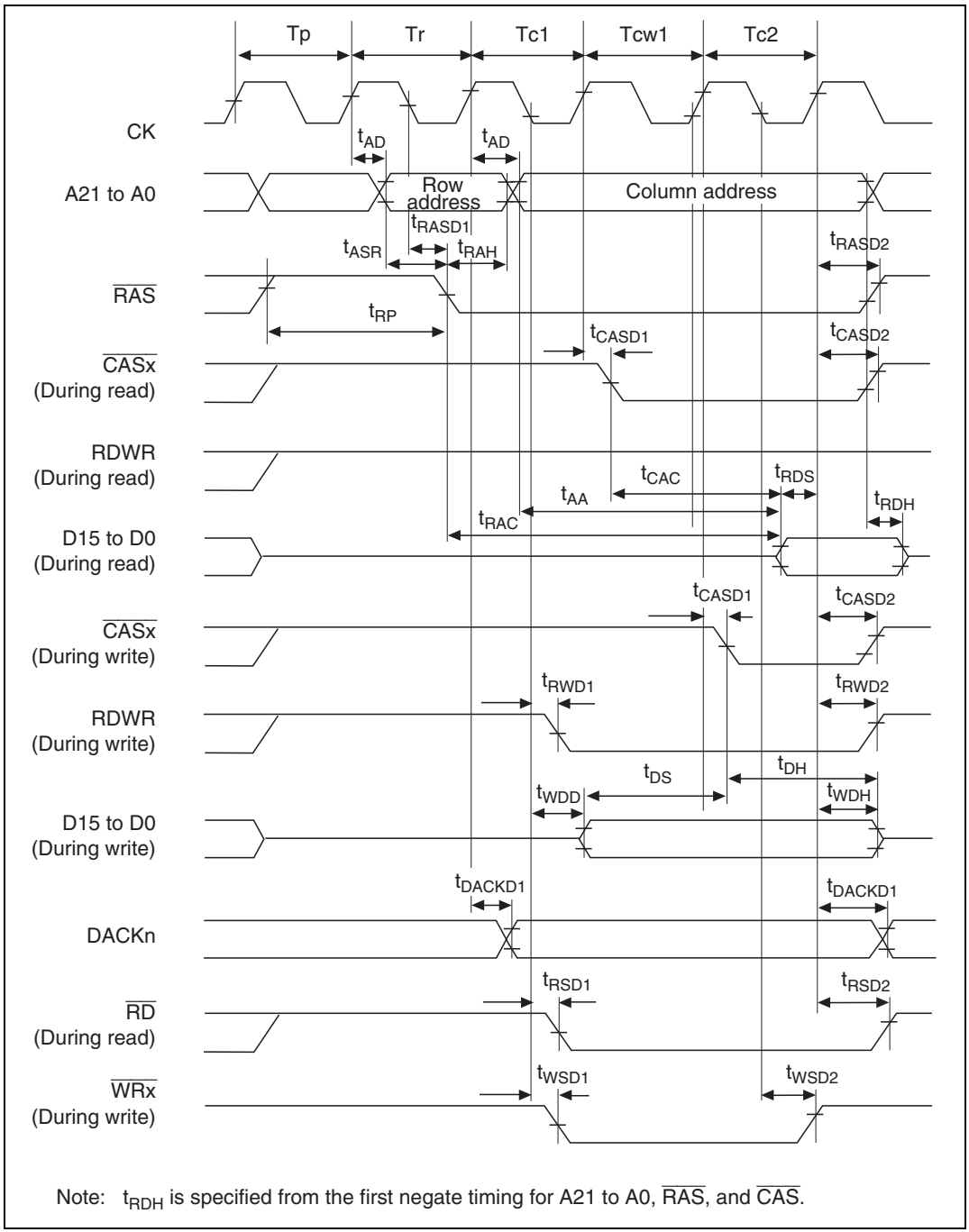

Note: t_{RDH} is specified from the first negate timing for A21 to A0, $\overline{RAS}$, and $\overline{CAS}$.

Figure 22.10 DRAM Cycle (Normal Mode, 1 Wait, TPC = 0, RCD = 0)

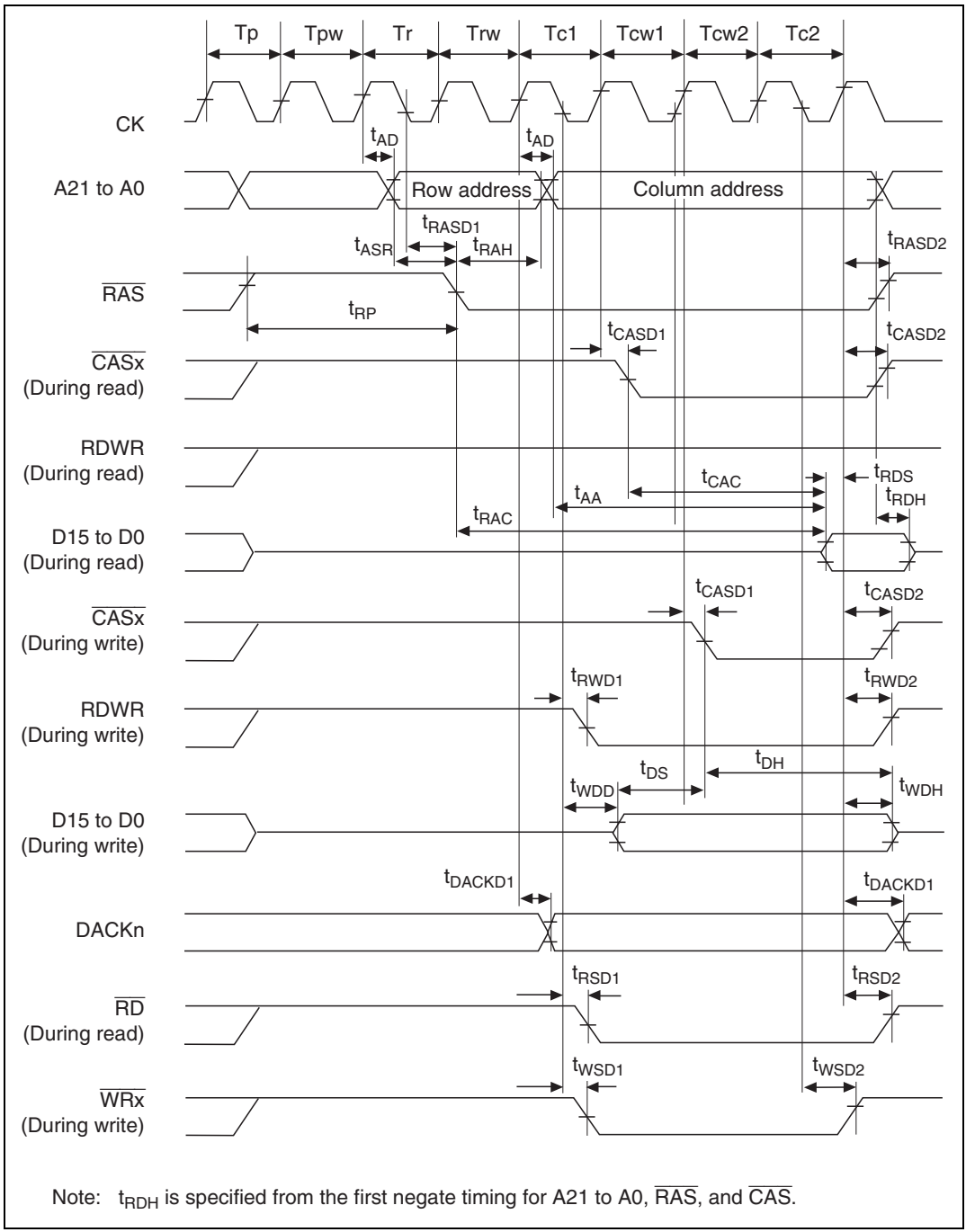

Note: t_{RDH} is specified from the first negate timing for A21 to A0, $\overline{RAS}$, and $\overline{CAS}$.

Figure 22.11 DRAM Cycle (Normal Mode, 2 Waits, TPC = 1, RCD = 1)

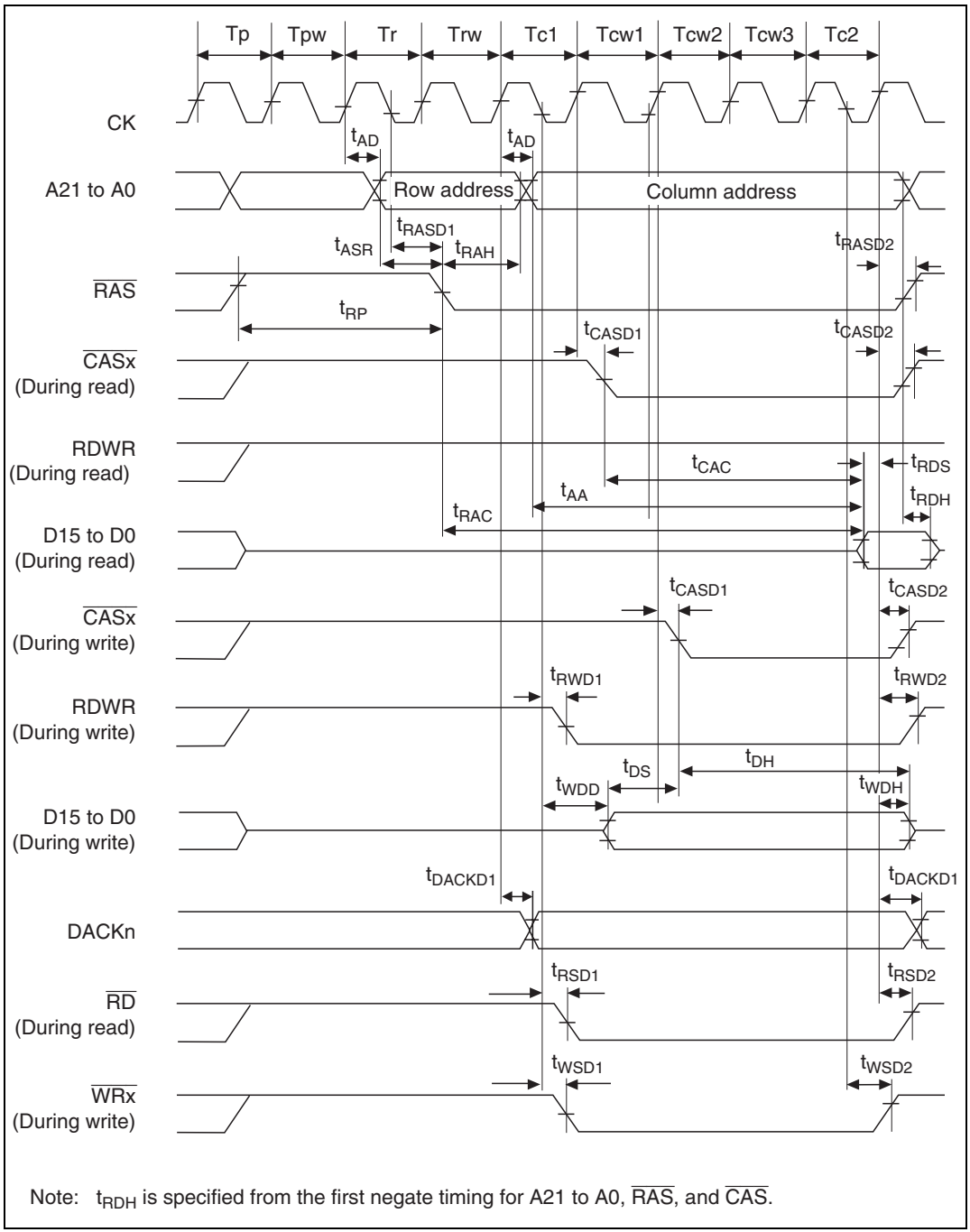

Note: t_{RDH} is specified from the first negate timing for A21 to A0, $\overline{RAS}$, and $\overline{CAS}$.

Figure 22.12 DRAM Cycle (Normal Mode, 3 Waits, TPC = 1, RCD = 1)

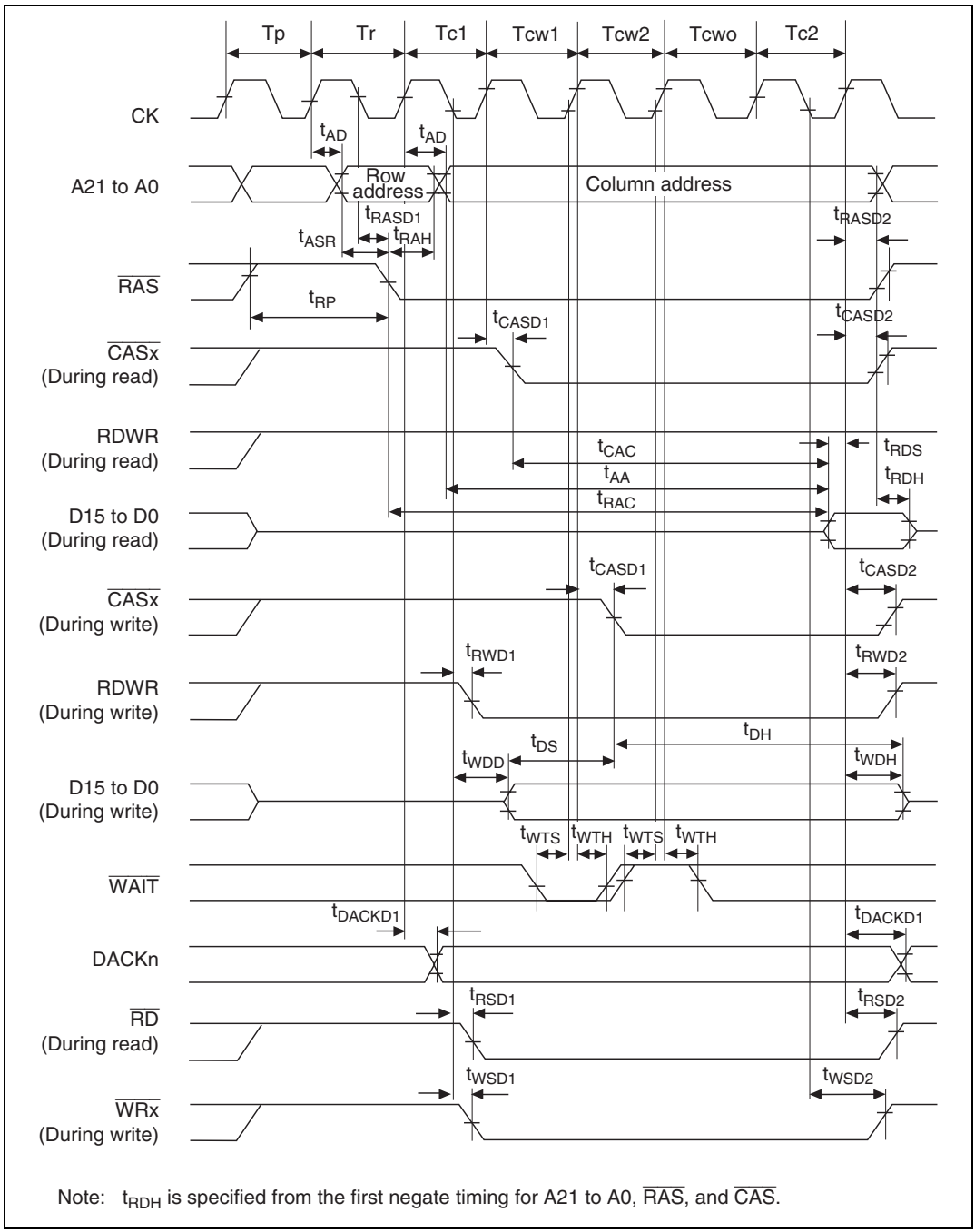

Note: t_{RDH} is specified from the first negate timing for A21 to A0, $\overline{RAS}$, and $\overline{CAS}$.

Figure 22.13 DRAM Cycle (Normal Mode, 2 Waits + Wait due to $\overline{WAIT}$ Signal)

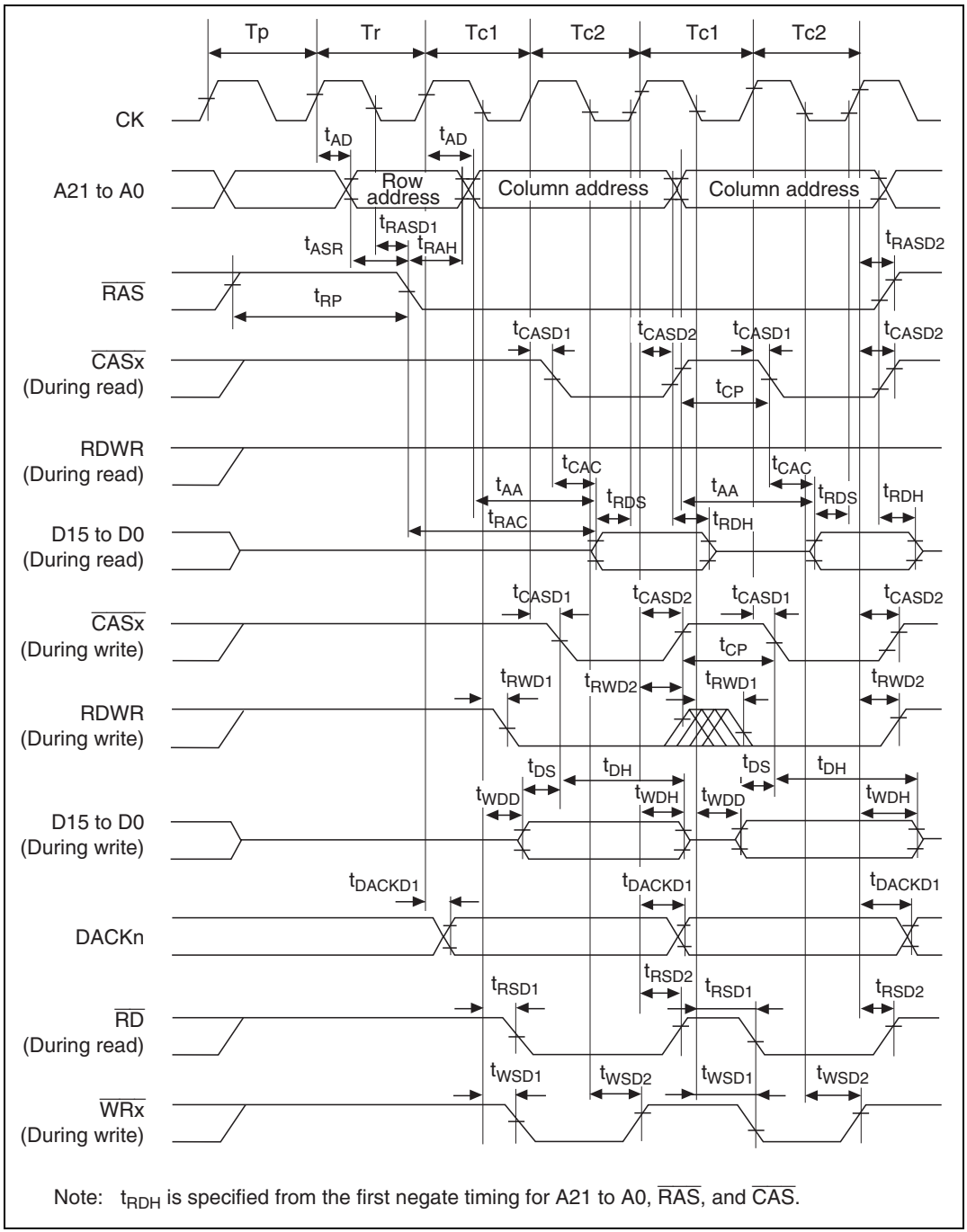

Note: t_{RDH} is specified from the first negate timing for A21 to A0, $\overline{RAS}$, and $\overline{CAS}$.

Figure 22.14 DRAM Cycle (High-Speed Page Mode)

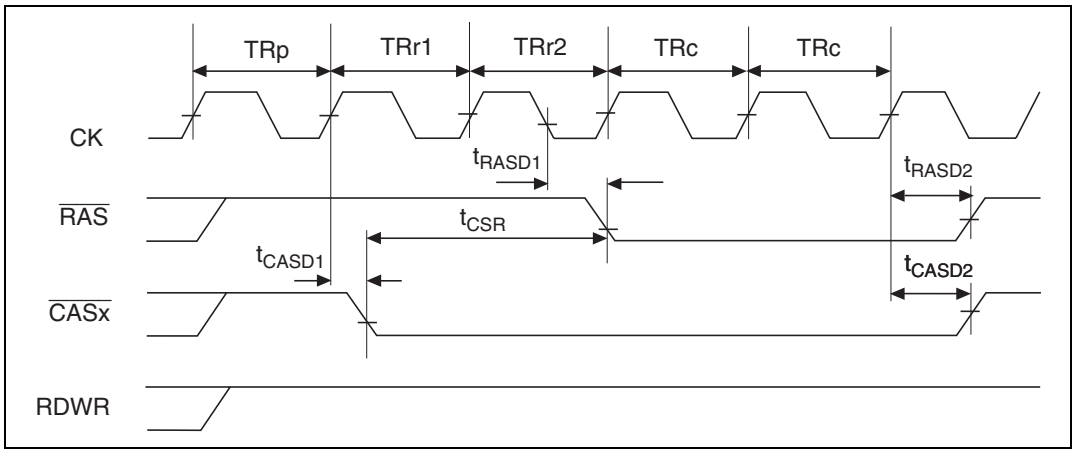

Figure 22.15 CAS Before RAS Refresh (TRAS1 = 0, TRAS0 = 0)

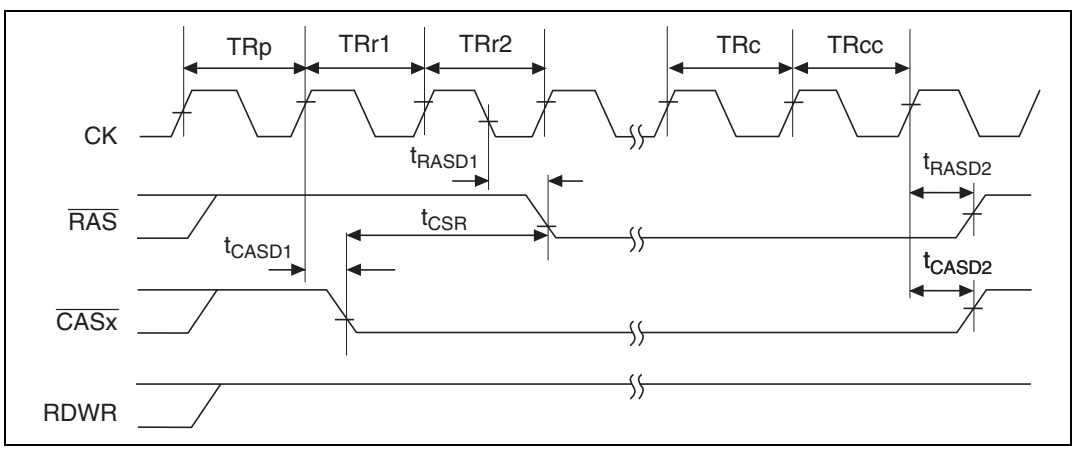

Figure 22.16 Self Refresh

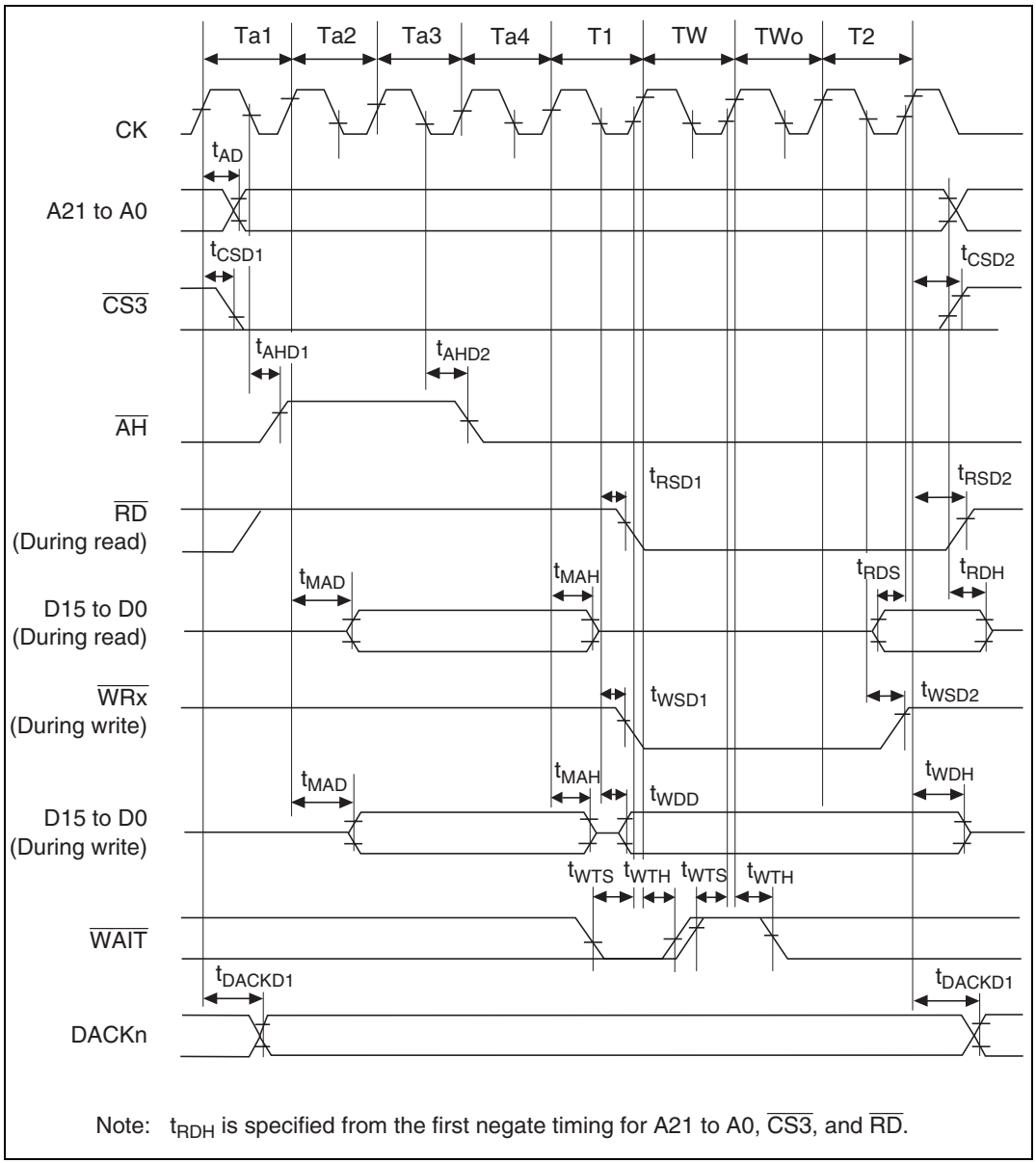

Note: t_{RDH} is specified from the first negate timing for A21 to A0, $\overline{CS3}$, and $\overline{RD}$.

Figure 22.17 Address Data Multiplex I/O Space Cycle (1 Software Wait + 1 External Wait)

22.3.4 Direct Memory Access Controller Timing

Table 22.8 shows the Direct Memory Access Controller Timing.

Table 22.8 Direct Memory Access Controller Timing

Conditions: V_{CC} = 5.0 V ±10%, AV_{CC} = 5.0 V ±10%, AV_{CC} = V_{CC} ±10%, V_{SS} = AV_{SS} = 0 V, Ta = –20 to +75°C

Item	Symbol	Min	Max	Unit	Figure
$\overline{\text{DREQ0}}$ and $\overline{\text{DREQ1}}$ setup time	t_{DRQS}	18	—	ns	22.18
$\overline{\text{DREQ0}}$ and $\overline{\text{DREQ1}}$ hold time	t_{DRQH}	18	—	ns	
$\overline{\text{DREQ0}}$ and $\overline{\text{DREQ1}}$ pulse width	t_{DRQW}	1.5	—	t_{cyc}	22.19
DRAK output delay time	t_{DRAKD}	18	—	ns	22.20

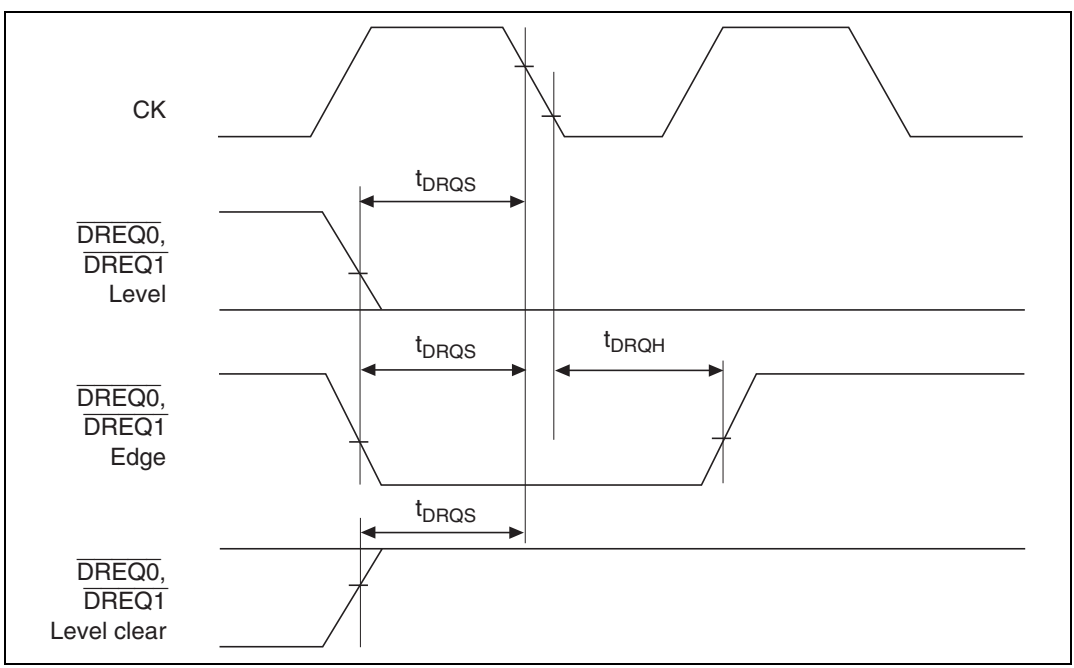

Figure 22.18 $\overline{\text{DREQ0}}$ and $\overline{\text{DREQ1}}$ Input Timing (1)

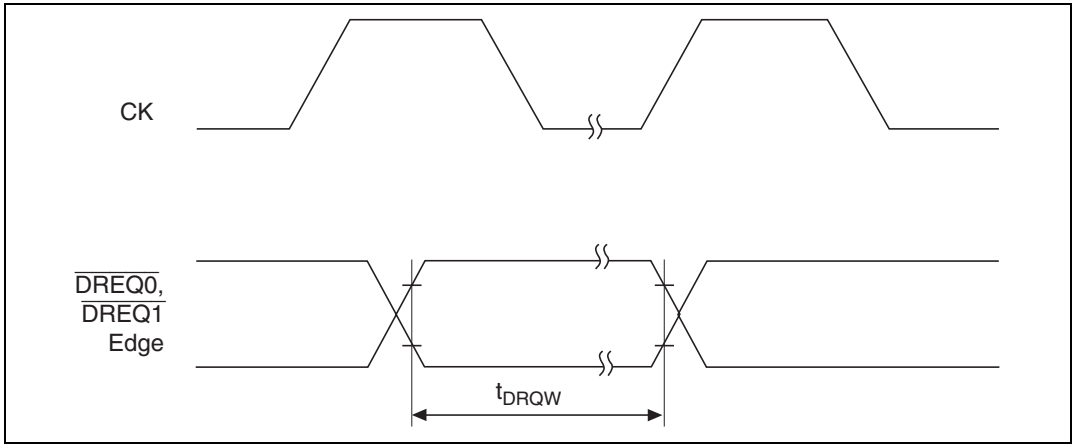

Figure 22.19 $\overline{\text{DREQ0}}$ and $\overline{\text{DREQ1}}$ Input Timing (2)

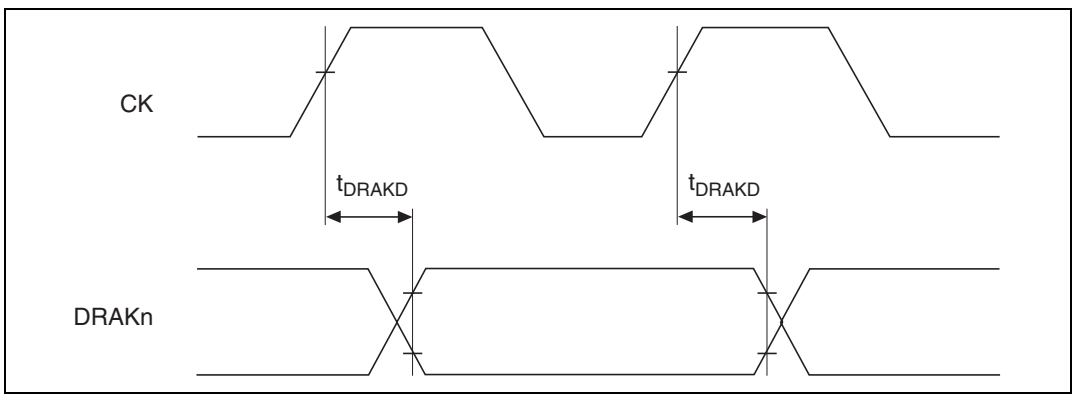

Figure 22.20 DRAK Output Delay Time

22.3.5 Multifunction Timer Pulse Unit Timing

Table 22.9 shows the Multifunction Timer Pulse Unit Timing

Table 22.9 Multifunction Timer Pulse Unit Timing

Conditions: V_{CC} = 5.0 V ±10%, AV_{CC} = 5.0 V ±10%, AV_{CC} = V_{CC} ±10%, V_{SS} = AV_{SS} = 0 V, Ta = –20 to +75°C

Item	Symbol	Min	Max	Unit	Figure
Output compare output delay time	t_{TOCD}	—	100	ns	22.21
Input capture input setup time	t_{TICS}	30	—	ns	
Timer input setup time	t_{TCKS}	35	—	ns	
Timer clock pulse width (single edge specification)	$t_{TCKWH/L}$	1.5	—	t_{cyc}	22.22
Timer clock pulse width (both edges specified)	$t_{TCKWH/L}$	2.5	—	t_{cyc}	
Timer clock pulse width (phase measurement mode)	$t_{TCKWH/L}$	2.5	—	t_{cyc}	

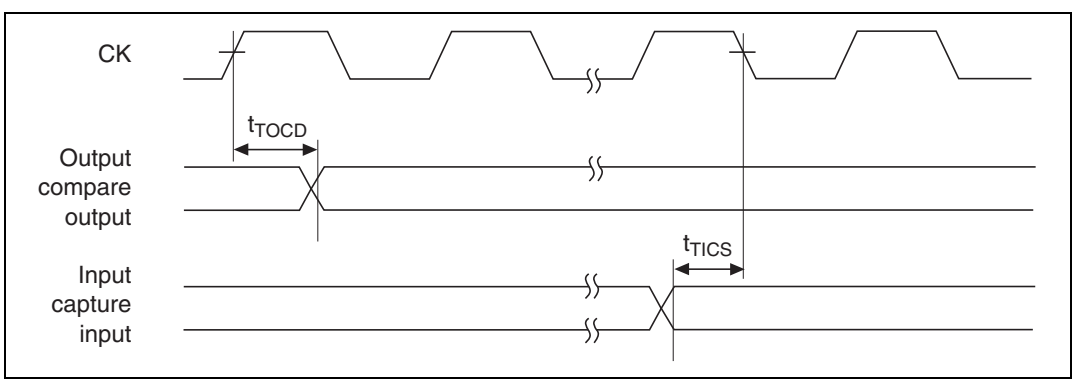

Figure 22.21 MTU I/O Timing

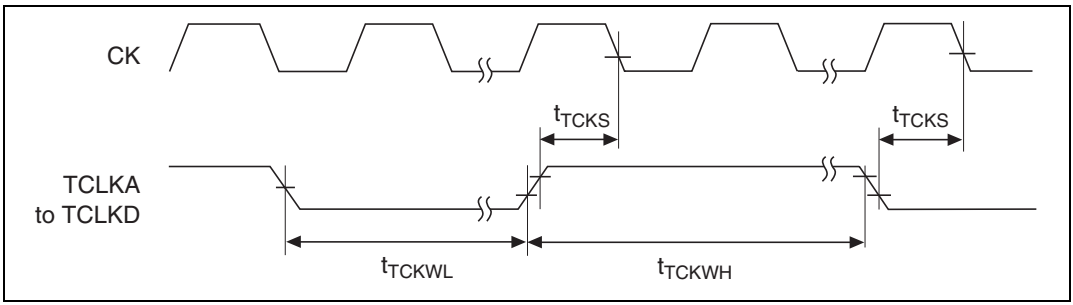

Figure 22.22 MTU Clock Input Timing

22.3.6 I/O Port Timing

Table 22.10 shows the I/O Port Timing.

Table 22.10 I/O Port Timing

Conditions: V_{CC} = 5.0 V ±10%, AV_{CC} = 5.0 V ±10%, AV_{CC} = V_{CC} ±10%, V_{SS} = AV_{SS} = 0 V, Ta = –20 to +75°C

Item	Symbol	Min	Max	Unit	Figure
Port output data delay time	t_{PWD}	—	100	ns	22.23
Port input hold time	t_{PRH}	35	—	ns	
Port input setup time	t_{PRS}	35	—	ns	

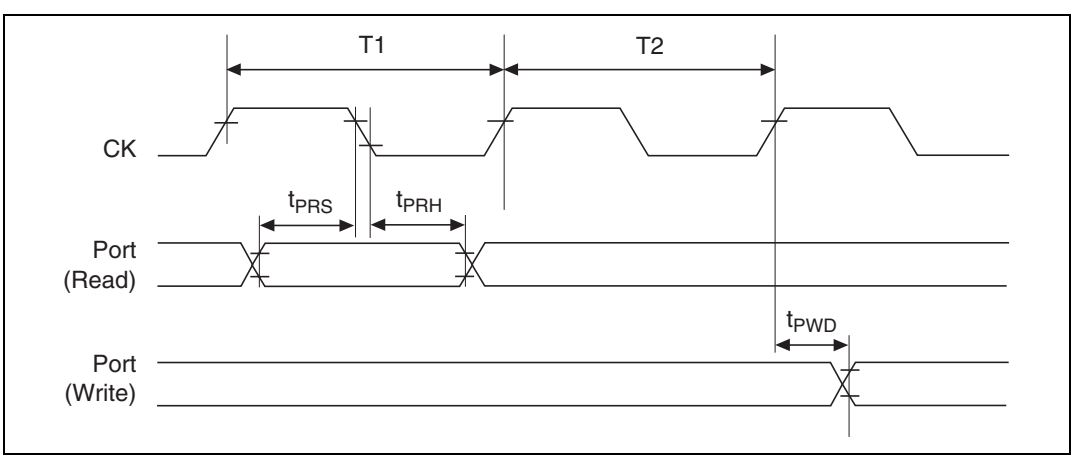

Figure 22.23 I/O Port I/O Timing

22.3.7 Watchdog Timer Timing

Table 22.11 shows the Watchdog Timer Timing.

Table 22.11 Watchdog Timer Timing

Conditions: V_{CC} = 5.0 V ±10%, AV_{CC} = 5.0 V ±10%, AV_{CC} = V_{CC} ±10%, V_{SS} = AV_{SS} = 0 V, Ta = –20 to +75°C

Item	Symbol	Min	Max	Unit	Figure
$\overline{\text{WDTOVF}}$ delay time	t_{WOVD}	—	100	ns	22.24

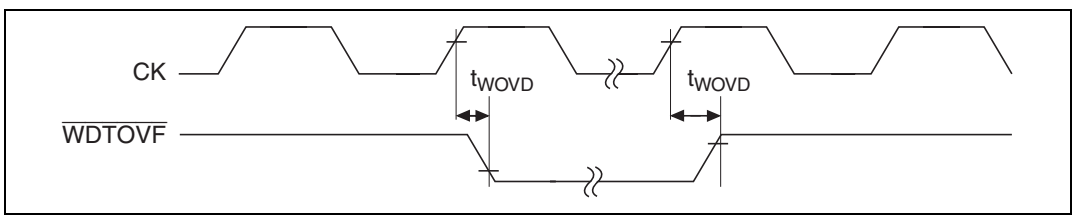

Figure 22.24 Watchdog Timer Timing

22.3.8 Serial Communication Interface Timing

Table 22.12 shows the Serial Communication Interface Timing.

Table 22.12 Serial Communication Interface Timing

Conditions: V_{CC} = 5.0 V ±10%, AV_{CC} = 5.0 V ±10%, AV_{CC} = V_{CC} ±10%, V_{SS} = AV_{SS} = 0 V, Ta = –20 to +75°C

Item	Symbol	Min	Max	Unit	Figure
Input clock cycle	t_{scyc}	4	—	t_{cyc}	22.25
Input clock cycle (clock sync)	t_{scyc}	6	—	t_{cyc}	
Input clock pulse width	t_{sckw}	0.4	0.6	t_{scyc}	
Input clock rise time	t_{sckr}	—	1.5	t_{cyc}	
Input clock fall time	t_{sckf}	—	1.5	t_{cyc}	
Transmit data delay time (clock sync)	t_{TXD}	—	100	ns	22.26
Receive data setup time (clock sync)	t_{RXS}	100	—	ns	
Receive data hold time (clock sync)	t_{RXH}	100	—	ns	

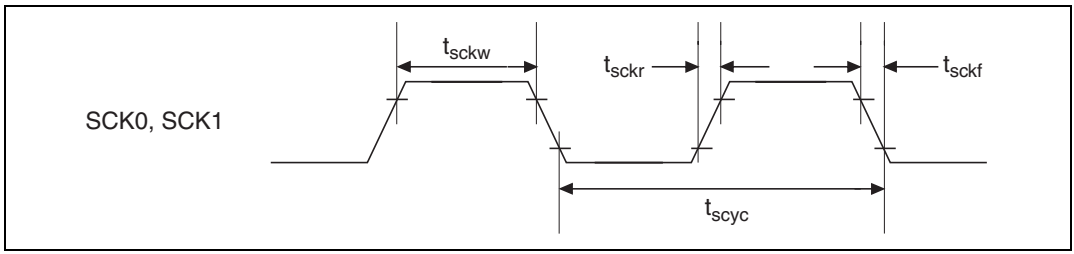

Figure 22.25 Input Clock Timing

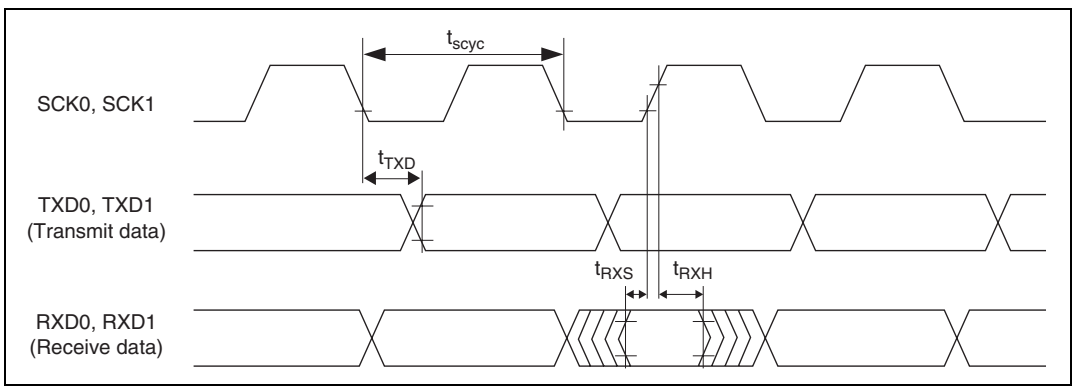

Figure 22.26 SCI I/O Timing (Clock Sync Mode)

22.3.9 High Speed A/D Converter Timing — SH7014 —

Table 22.13 shows the High-speed A/D Converter Timing.

Table 22.13 High-speed A/D Converter Timing

Conditions: V_{CC} = 5.0 V ±10%, AV_{CC} = 5.0 V ±10%, AV_{CC} = V_{CC} ±10%, V_{SS} = AV_{SS} = 0 V, Ta = –20 to +75°C

Item		Symbol	Min	Typ	Max	Unit	Figure
A/D conversion start delay time	CKS = 0	t_D	1.5	1.5	1.5	t_{cyc}	22.27
	CKS = 1		1.5	1.5	1.5		
Input sampling time	CKS = 0	t_{SPL}	20	20	20		
	CKS = 1		40	40	40		
A/D conversion time	CKS = 0	t_{CONV}	42.5	42.5	42.5		
	CKS = 1		82.5	82.5	82.5		

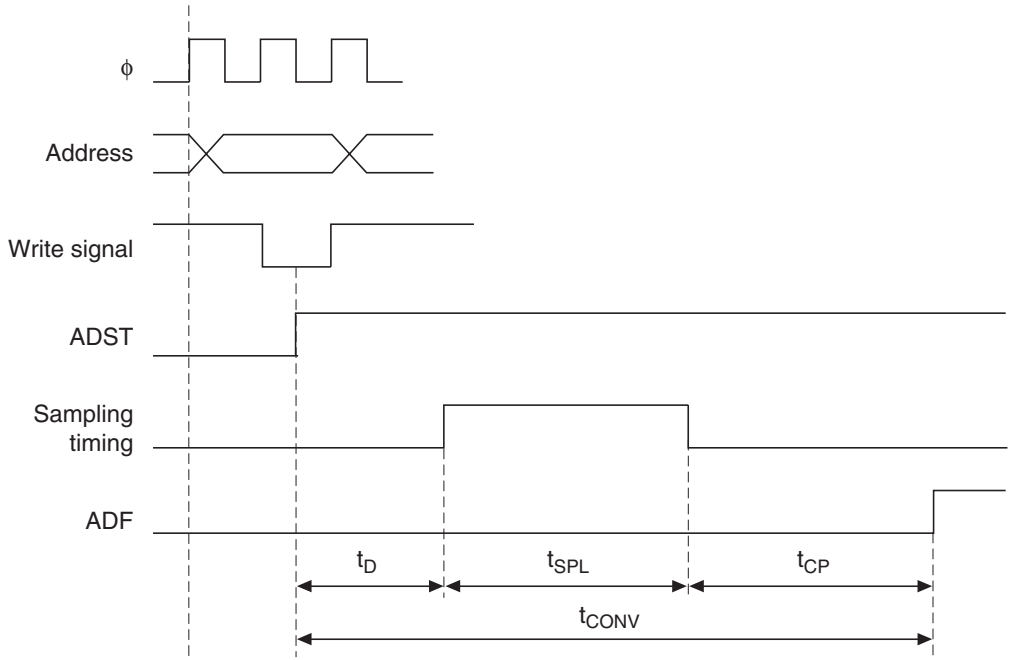

Legend:
t_D: A/D conversion start delay time
t_{SPL}: Input sampling time
t_{CONV}: A/D conversion time
t_{CP}: Operation time

Figure 22.27 Analog Conversion Timing

22.3.10 Mid-speed Converter Timing — SH7016, SH7017 —

Table 22.14 shows the Mid-speed A/D Converter Timing.

Table 22.14 Mid-speed A/D Converter Timing

Conditions: V_{CC} = 5.0 V ±10%, AV_{CC} = 5.0 V ±10%, AV_{CC} = V_{CC} ±10%, V_{SS} = AV_{SS} = 0V, Ta = –20 to +75°C

Item		Symbol	Min	Typ	Max	Unit	Figure
A/D conversion start delay time	CKS = 0	t_D	10	—	17	t_{cyc}	22.28
	CKS = 1		6	—	9		
Input sampling time	CKS = 0	t_{SPL}	—	64	—		
	CKS = 1		—	32	—		
A/D conversion time	CKS = 0	t_{CONV}	259	—	266		
	CKS = 1		131	—	134		

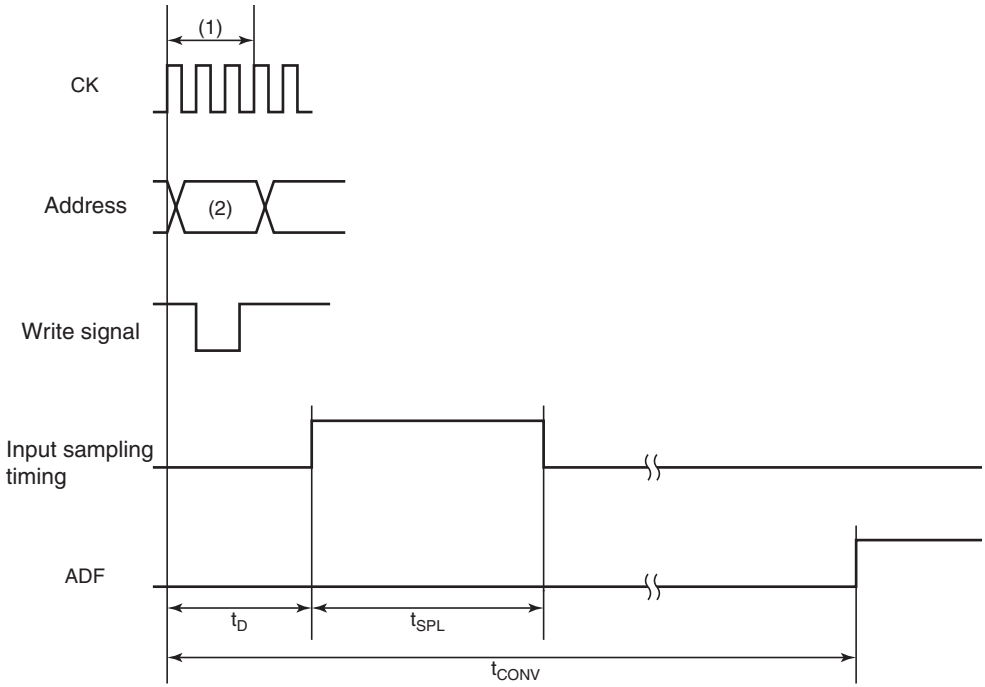

Legend:
(1): Write cycle of ADCSR
(2): Address of ADCSR
t_D: A/D conversion start delay time
t_{SPL}: Input sampling time
t_{CONV}: A/D conversion time

Figure 22.28 Analog Conversion Timing

22.3.11 Measuring Conditions for AC Characteristics

- Input reference levels:
  - High level: 2.2 V
  - Low level: 0.8 V
- Output reference levels:
  - High level: 2.0 V
  - Low level: 0.8 V

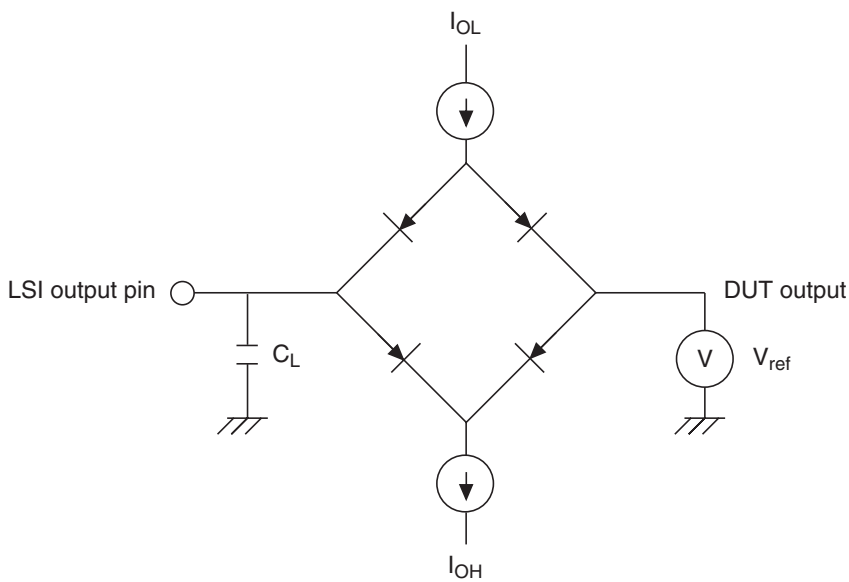

Note: C_L is set with the following pins, including the total capacitance of the measurement jig, etc:

30 pF: CK, $\overline{RAS}$, $\overline{CASx}$, RDWR, $\overline{CS0}$ to $\overline{CS3}$, $\overline{AH}$, DACK0, DACK1
50 pF: A21 to A0, D15 to D0, $\overline{RD}$, $\overline{WRx}$
70 pF: Port output and peripheral module output pins other than the above.
I_{OL}, I_{OH}: See table 22.3, Permitted Output Current Values.

Figure 22.29 Output Test Circuit

22.4 A/D Converter Characteristics

Tables 22.15 and 22.16 show A/D converter characteristics for the HD6417014 and HD6417014R, and table 22.17 shows A/D converter characteristics for the SH7016 and SH7017. The HD6417014R has an absolute error of ±8 LSB or less.

Table 22.15 A/D Converter Characteristics (HD6417014)

Conditions: V_{CC} = 5.0 V ±10%, AV_{CC} = 5.0 V ±10%, AV_{CC} = V_{CC} ±10%, V_{SS} = AV_{SS} = 0 V, Ta = –20 to +75°C

	28.7MHz			
Item	**Min**	**Typ**	**Max**	**Unit**
Resolution	10	10	10	Bits
Conversion time*[1]	—	—	2.9	μs
Analog input capacitance	—	—	20	pF
Permitted signal source impedance	—	—	1	kΩ
Non-linear error*[2]	—	—	±8	LSB
Offset error*[2]	—	—	±8	LSB
Full-scale error*[2]	—	—	±8	LSB
Quantization error*[2]	—	—	±0.5	LSB
Absolute error*[1]	—	—	±15	LSB

Notes: 1. CKS = 1
2. Reference values

Table 22.16 A/D Converter Characteristics (HD6417014R)

Conditions: V_{CC} = 5.0 V ±10%, AV_{CC} = V_{CC} ±10%, V_{CC} = AV_{CC} = 0 V, Ta = –20 to +75°C

	28.7MHz			
Item	**Min**	**Typ**	**Max**	**Unit**
Resolution	10	10	10	bit
Conversion time*[1]	—	—	2.9	μs
Analog input capacitance	—	—	20	pF
Permission signal source impedance	—	—	1	kΩ
Non-linear error*[2]	—	—	±8	LSB
Offset error*[2]	—	—	±8	LSB
Full scale error*[2]	—	—	±8	LSB
Quantize error*[2]	—	—	±0.5	LSB
Absolute error*[1]	—	—	±8	LSB

Notes: 1. CKS = 1
2. Reference values

Table 22.17 A/D Converter Characteristics (SH7016, SH7017)

Conditions: V_{CC} = 5.0 V ±10%, AV_{CC} = 5.0 V ±10%, AV_{CC} = V_{CC} = 0 V, V_{SS} = AV_{SS} = 0 V,
Ta = –20 to +75°C

	28.7MHz			20MHz			
Item	**min**	**typ**	**max**	**min**	**typ**	**max**	**Unit**
Resolution	10	10	10	10	10	10	bit
Conversion time (when CKS = 0)	—	—	9.3	—	—	13.4*[2]	μs
Analog input capacity	—	—	20	—	—	20	pF
Permission signal source impedance	—	—	1	—	—	1	kΩ
Non-linearity error*[1]	—	—	±3	—	—	±3	LSB
Offset error*[1]	—	—	±3	—	—	±3	LSB
Full scale error*[1]	—	—	±3	—	—	±3	LSB
Quantize error*[1]	—	—	±0.5	—	—	±0.5	LSB
Absolute error	—	—	±4	—	—	±4	LSB

Notes: 1. Reference value
2. 6.7 μs when CKS = 1.

Appendix A On-Chip Supporting Module Registers

A.1 Addresses

Table A.1 On-Chip I/O Register Addresses

Address	Register Abbr.	Bit Names								Module
		Bit 7	Bit 6	Bit 5	Bit 4	Bit 3	Bit 2	Bit 1	Bit 0	
H'FFFF81A0	SMR0	C/$\overline{A}$	CHR	PE	O/$\overline{E}$	STOP	MP	CKS1	CKS0	SCI
H'FFFF81A1	BRR0									
H'FFFF81A2	SCR0	TIE	RIE	TE	RE	MPIE	TEIE	CKE1	CKE0	
H'FFFF81A3	TDR0									
H'FFFF81A4	SSR0	TDRE	RDRF	ORER	FER	PER	TEND	MPB	MPBT	
H'FFFF81A5	RDR0									
H'FFFF81A6 to H'FFFF81AF	—	—	—	—	—	—	—	—	—	
H'FFFF81B0	SMR1	C/$\overline{A}$	CHR	PE	O/$\overline{E}$	STOP	MP	CKS1	CKS0	
H'FFFF81B1	BRR1									
H'FFFF81B2	SCR1	TIE	RIE	TE	RE	MPIE	TEIE	CKE1	CKE0	
H'FFFF81B3	TDR1									
H'FFFF81B4	SSR1	TDRE	RDRF	ORER	FER	PER	TEND	MPB	MPBT	
H'FFFF81B5	RDR1									
H'FFFF81B6 to H'FFFF81FF	—	—	—	—	—	—	—	—	—	
H'FFFF8200 to H'FFFF823F	—	—	—	—	—	—	—	—	—	MTU
H'FFFF8240	TSTR	—	—	—	—	—	CST2	CST1	CST0	
H'FFFF8241	TSYR	—	—	—	—	—	SYNC2	SYNC1	SYNC0	
H'FFFF8242 to H'FFFF825F	—	—	—	—	—	—	—	—	—	
H'FFFF8260	TCR0	CCLR2	CCLR1	CCLR0	CKEG1	CKEG0	TPSC2	TPSC1	TPSC0	
H'FFFF8261	TMDR0	—	—	BFB	BFA	MD3	MD2	MD1	MD0	
H'FFFF8262	TIOR0H	IOB3	IOB2	IOB1	IOB0	IOA3	IOA2	IOA1	IOA0	
H'FFFF8263	TIOR0L	IOD3	IOD2	IOD1	IOD0	IOC3	IOC2	IOC1	IOC0	
H'FFFF8264	TIER0	TTGE	—	—	TCIEV	TGIED	TGIEC	TGIEB	TGIEA	
H'FFFF8265	TSR0	—	—	—	TCFV	TGFD	TGFC	TGFB	TGFA	
H'FFFF8266	TCNT0									
H'FFFF8267										

Address	Register Abbr.	Bit Names								Module
		Bit 7	Bit 6	Bit 5	Bit 4	Bit 3	Bit 2	Bit 1	Bit 0	
H'FFFF8268	TGR0A									MTU
H'FFFF8269										
H'FFFF826A	TGR0B									
H'FFFF826B										
H'FFFF826C	TGR0C									
H'FFFF826D										
H'FFFF826E	TGR0D									
H'FFFF826F										
H'FFFF8270 to H'FFFF827F	—	—	—	—	—	—	—	—	—	
H'FFFF8280	TCR1	—	CCLR1	CCLR0	CKEG1	CKEG0	TPSC2	TPSC1	TPSC0	
H'FFFF8281	TMDR1	—	—	—	—	MD3	MD2	MD1	MD0	
H'FFFF8282	TIOR1	IOB3	IOB2	IOB1	IOB0	IOA3	IOA2	IOA1	IOA0	
H'FFFF8283	—	—	—	—	—	—	—	—	—	
H'FFFF8284	TIER1	TTGE	—	TCIEU	TCIEV	—	—	TGIEB	TGIEA	
H'FFFF8285	TSR1	TCFD	—	TCFU	TCFV	—	—	TGFB	TGFA	
H'FFFF8286	TCNT1									
H'FFFF8287										
H'FFFF8288	TGR1A									
H'FFFF8289										
H'FFFF828A	TGR1B									
H'FFFF828B										
H'FFFF828C to H'FFFF829F	—	—	—	—	—	—	—	—	—	
H'FFFF82A0	TCR2	—	CCLR1	CCLR0	CKEG1	CKEG0	TPSC2	TPSC1	TPSC0	
H'FFFF82A1	TMDR2	—	—	—	—	MD3	MD2	MD1	MD0	
H'FFFF82A2	TIOR2	IOB3	IOB2	IOB1	IOB0	IOA3	IOA2	IOA1	IOA0	
H'FFFF82A3	—	—	—	—	—	—	—	—	—	
H'FFFF82A4	TIER2	TTGE	—	TCIEU	TCIEV	—	—	TGIEB	TGIEA	
H'FFFF82A5	TSR2	TCFD	—	TCFU	TCFV	—	—	TGFB	TGFA	
H'FFFF82A6	TCNT2									
H'FFFF82A7										
H'FFFF82A8	TGR2A									
H'FFFF82A9										
H'FFFF82AA	TGR2B									
H'FFFF82AB										
H'FFFF82AC to H'FFFF8347	—	—	—	—	—	—	—	—	—	

Address	Register Abbr.	Bit Names								Module
		Bit 7	Bit 6	Bit 5	Bit 4	Bit 3	Bit 2	Bit 1	Bit 0	
H'FFFF8348	IPRA									INTC
H'FFFF8349										
H'FFFF834A	IPRB									
H'FFFF834B										
H'FFFF834C	IPRC									
H'FFFF834D										
H'FFFF834E	IPRD									
H'FFFF834F										
H'FFFF8350	IPRE									
H'FFFF8351										
H'FFFF8352	IPRF									
H'FFFF8353										
H'FFFF8354	IPRG									
H'FFFF8355										
H'FFFF8356	IPRH									
H'FFFF8357										
H'FFFF8358	ICR	NMIL	—	—	—	—	—	—	NMIE	
H'FFFF8359		IRQ0S	IRQ1S	IRQ2S	IRQ3S	—	—	IRQ6S	IRQ7S	
H'FFFF835A	ISR	—	—	—	—	—	—	—	—	
H'FFFF835B		IRQ0F	IRQ1F	IRQ2F	IRQ3F	—	—	IRQ6F	IRQ7F	
H'FFFF835C to H'FFFF8381	—	—	—	—	—	—	—	—	—	
H'FFFF8382	PADRL	PA15DR	PA14DR*1	PA13DR*1	PA12DR*1	PA11DR*1	PA10DR*1	PA9DR	PA8DR	I/O
H'FFFF8383		PA7DR	PA6DR	PA5DR	PA4DR	PA3DR	PA2DR	PA1DR	PA0DR	
H'FFFF8384	—	—	—	—	—	—	—	—	—	PFC
H'FFFF8385	—	—	—	—	—	—	—	—	—	
H'FFFF8386	PAIORL	PA15IOR	PA14IOR *1	PA13IOR *1	PA12IOR *1	PA11IOR *1	PA10IOR *1	PA9IOR*1	PA8IOR*1	
H'FFFF8387		PA7IOR	PA6IOR	PA5IOR	PA4IOR	PA3IOR	PA2IOR	PA1IOR	PA0IOR	
H'FFFF8388	—	—	—	—	—	—	—	—	—	
H'FFFF8389	—	—	—	—	—	—	—	—	—	

Address	Register Abbr.	Bit Names: Bit 7	Bit 6	Bit 5	Bit 4	Bit 3	Bit 2	Bit 1	Bit 0	Module
H'FFFF838A	—	—	—	—	—	—	—	—	—	PFC
H'FFFF838B	—	—	—	—	—	—	—	—	—	
H'FFFF838C	PACRL1	—	PA15MD	—	PA14MD *1	—	PA13MD *1	—	PA12MD *1	
H'FFFF838D		—	PA11MD *1	—	PA10MD *1	PA9MD1	PA9MD0	PA8MD1	PA8MD0	
H'FFFF838E	PACRL2	PA7MD1	PA7MD0	PA6MD1	PA6MD0	PA5MD1	PA5MD0	—	PA4MD	
H'FFFF838F		—	PA3MD	PA2MD1	PA2MD0	—	PA1MD	—	PA0MD	
H'FFFF8390	PBDR	—	—	—	—	—	—	PB9DR	PB8DR	I/O
H'FFFF8391		PB7DR	PB6DR	PB5DR	PB4DR	PB3DR	PB2DR	PB1DR*1	PB0DR*1	
H'FFFF8392	PCDR*2	PC15DR	PC14DR	PC13DR	PC12DR	PC11DR	PC10DR	PC9DR	PC8DR	
H'FFFF8393		PC7DR	PC6DR	PC5DR	PC4DR	PC3DR	PC2DR	PC1DR	PC0DR	
H'FFFF8394	PBIOR	—	—	—	—	—	—	PB9IOR	PB8IOR	PFC
H'FFFF8395		PB7IOR	PB6IOR	PB5IOR	PB4IOR	PB3IOR	PB2IOR	PB1IOR*1	PB0IOR*1	
H'FFFF8396	PCIOR*2	PC15IOR	PC14IOR	PC13IOR	PC12IOR	PC11IOR	PC10IOR	PC9IOR	PC8IOR	
H'FFFF8397		PC7IOR	PC6IOR	PC5IOR	PC4IOR	PC3IOR	PC2IOR	PC1IOR	PC0IOR	
H'FFFF8398	PBCR1	—	—	—	—	—	—	—	—	
H'FFFF8399		—	—	—	—	PB9MD1	PB9MD0	PB8MD1	PB8MD0	
H'FFFF839A	PBCR2	PB7MD1	PB7MD0	PB6MD1	PB6MD0	PB5MD1	PB5MD0	PB4MD1	PB4MD0	
H'FFFF839B		PB3MD1	PB3MD0	PB2MD1	PB2MD0	—	PB1MD*1	—	PB0MD*1	
H'FFFF839C	PCCR*2	PC15MD	PC14MD	PC13MD	PC12MD	PC11MD	PC10MD	PC9MD	PC8MD	
H'FFFF839D		PC7MD	PC6MD	PC5MD	PC4MD	PC3MD	PC2MD	PC1MD	PC0MD	
H'FFFF839E	—	—	—	—	—	—	—	—	—	
H'FFFF839F	—	—	—	—	—	—	—	—	—	
H'FFFF83A0	—	—	—	—	—	—	—	—	—	I/O
H'FFFF83A1	—	—	—	—	—	—	—	—	—	
H'FFFF83A2	PDDRL*2	PD15DR	PD14DR	PD13DR	PD12DR	PD11DR	PD10DR	PD9DR	PD8DR	
H'FFFF83A3		PD7DR	PD6DR	PD5DR	PD4DR	PD3DR	PD2DR	PD1DR	PD0DR	
H'FFFF83A4	—	—	—	—	—	—	—	—	—	PFC
H'FFFF83A5	—	—	—	—	—	—	—	—	—	
H'FFFF83A6	PDIORL*2	PD15IOR	PD14IOR	PD13IOR	PD12IOR	PD11IOR	PD10IOR	PD9IOR	PD8IOR	
H'FFFF83A7		PD7IOR	PD6IOR	PD5IOR	PD4IOR	PD3IOR	PD2IOR	PD1IOR	PD0IOR	
H'FFFF83A8	—	—	—	—	—	—	—	—	—	
H'FFFF83A9	—	—	—	—	—	—	—	—	—	
H'FFFF83AA	—	—	—	—	—	—	—	—	—	
H'FFFF83AB	—	—	—	—	—	—	—	—	—	

Address	Register Abbr.	Bit Names								Module
		Bit 7	Bit 6	Bit 5	Bit 4	Bit 3	Bit 2	Bit 1	Bit 0	
H'FFFF83AC	PDCRL*[2]	PD15MD	PD14MD	PD13MD	PD12MD	PD11MD	PD10MD	PD9MD	PD8MD	PFC
H'FFFF83AD		PD7MD	PD6MD	PD5MD	PD4MD	PD3MD	PD2MD	PD1MD	PD0MD	
H'FFFF83AE	—	—	—	—	—	—	—	—	—	
H'FFFF83AF	—	—	—	—	—	—	—	—	—	
H'FFFF83B0	PEDR	PE15DR	PE14DR	PE13DR	PE12DR	PE11DR	PE10DR	PE9DR	PE8DR	I/O
H'FFFF83B1		PE7DR	PE6DR	PE5DR	PE4DR	PE3DR	PE2DR	PE1DR	PE0DR	
H'FFFF83B2	PFDR	—	—	—	—	—	—	—	—	
H'FFFF83B3		PF7DR	PF6DR	PF5DR	PF4DR	PF3DR	PF2DR	PF1DR	PF0DR	
H'FFFF83B4	PEIOR	PE15IOR	PE14IOR	PE13IOR	PE12IOR	PE11IOR	PE10IOR	PE9IOR	PE8IOR	PFC
H'FFFF83B5		PE7IOR	PE6IOR	PE5IOR	PE4IOR	PE3IOR	PE2IOR	PE1IOR	PE0IOR	
H'FFFF83B6	—	—	—	—	—	—	—	—	—	
H'FFFF83B7	—	—	—	—	—	—	—	—	—	
H'FFFF83B8	PECR1	PE15MD1	PE15MD0	PE14MD1	PE14MD0	—	—	—	—	
H'FFFF83B9		—	—	—	—	—	—	—	—	
H'FFFF83BA	PECR2	—	PE7MD	—	PE6MD	—	PE5MD	—	PE4MD	
H'FFFF83BB		PE3MD1	PE3MD0	PE2MD1	PE2MD0	PE1MD1	PE1MD0	PE0MD1	PE0MD0	
H'FFFF83BC to H'FFFF83CF	—	—	—	—	—	—	—	—	—	—
H'FFFF83D0	CMSTR	—	—	—	—	—	—	—	—	CMT
H'FFFF83D1		—	—	—	—	—	—	STR1	STR0	
H'FFFF83D2	CMCSR0	—	—	—	—	—	—	—	—	
H'FFFF83D3		CMF	CMIE	—	—	—	—	CKS1	CKS0	
H'FFFF83D4	CMCNT0									
H'FFFF83D5										
H'FFFF83D6	CMCOR0									
H'FFFF83D7										
H'FFFF83D8	CMCSR1	—	—	—	—	—	—	—	—	
H'FFFF83D9		CMF	CMIE	—	—	—	—	CKS1	CKS0	
H'FFFF83DA	CMCNT1									
H'FFFF83DB										
H'FFFF83DC	CMCOR1									
H'FFFF83DD										
H'FFFF83DE	—	—	—	—	—	—	—	—	—	
H'FFFF83DF	—	—	—	—	—	—	—	—	—	

Address	Register Abbr.	Bit Names								Module
		Bit 7	Bit 6	Bit 5	Bit 4	Bit 3	Bit 2	Bit 1	Bit 0	
H'FFFF83E0	ADCSR	ADF	ADIE	ADST	CKS	GRP	CH2	CH1	CH0	A/D (High speed) (SH7014)
H'FFFF83E1	ADCR	—	PWR	TRGS1	TRGS0	SCAN	DSMP	BUFE1	BUFE0	
H'FFFF83E2 to H'FFFF83EF	—	—	—	—	—	—	—	—	—	
H'FFFF83F0	ADDRA	—	—	—	—	—	—	AD9	AD8	
H'FFFF83F1		AD7	AD6	AD5	AD4	AD3	AD2	AD1	AD0	
H'FFFF83F2	ADDRB	—	—	—	—	—	—	AD9	AD8	
H'FFFF83F3		AD7	AD6	AD5	AD4	AD3	AD2	AD1	AD0	
H'FFFF83F4	ADDRC	—	—	—	—	—	—	AD9	AD8	
H'FFFF83F5		AD7	AD6	AD5	AD4	AD3	AD2	AD1	AD0	
H'FFFF83F6	ADDRD	—	—	—	—	—	—	AD9	AD8	
H'FFFF83F7		AD7	AD6	AD5	AD4	AD3	AD2	AD1	AD0	
H'FFFF83F8	ADDRE	—	—	—	—	—	—	AD9	AD8	
H'FFFF83F9		AD7	AD6	AD5	AD4	AD3	AD2	AD1	AD0	
H'FFFF83FA	ADDRF	—	—	—	—	—	—	AD9	AD8	
H'FFFF83FB		AD7	AD6	AD5	AD4	AD3	AD2	AD1	AD0	
H'FFFF83FC	ADDRG	—	—	—	—	—	—	AD9	AD8	
H'FFFF83FD		AD7	AD6	AD5	AD4	AD3	AD2	AD1	AD0	
H'FFFF83FE	ADDRH	—	—	—	—	—	—	AD9	AD8	
H'FFFF83FF		AD7	AD6	AD5	AD4	AD3	AD2	AD1	AD0	
H'FFFF8400 to H'FFFF841F	—	—	—	—	—	—	—	—	—	
H'FFFF8420	ADDRA	AD9	AD8	AD7	AD6	AD5	AD4	AD3	AD2	A/D (Mid-speed) (SH7016 /17)
H'FFFF8421		AD1	AD0	—	—	—	—	—	—	
H'FFFF8422	ADDRB	AD9	AD8	AD7	AD6	AD5	AD4	AD3	AD2	
H'FFFF8423		AD1	AD0	—	—	—	—	—	—	
H'FFFF8424	ADDRC	AD9	AD8	AD7	AD6	AD5	AD4	AD3	AD2	
H'FFFF8425		AD1	AD0	—	—	—	—	—	—	
H'FFFF8426	ADDRD	AD9	AD8	AD7	AD6	AD5	AD4	AD3	AD2	
H'FFFF8427		AD1	AD0	—	—	—	—	—	—	
H'FFFF8428	ADCSR	ADF	ADIE	ADST	SCAN	CKS	CH2	CH1	CH0	
H'FFFF8429	ADCR	TRGE	—	—	—	—	—	—	—	
H'FFFF842A to H'FFFF857F	—	—	—	—	—	—	—	—	—	

Address	Register Abbr.	Bit Names								Module
		Bit 7	Bit 6	Bit 5	Bit 4	Bit 3	Bit 2	Bit 1	Bit 0	
H'FFFF8580	FLMCR1	FWE	SWE	ESU1	PSU1	EV1	PV1	E1	P1	FLASH (F-ZTAT version only)
H'FFFF8581	FLMCR2	FLER	—	—	—	—	—	—	—	
H'FFFF8582	EBR1	EB7	EB6	EB5	EB4	EB3	EB2	EB1	EB0	
H'FFFF8583 to H'FFFF860F	—	—	—	—	—	—	—	—	—	
H'FFFF8610	TCSR	OVF	WT/IT	TME	—	—	CKS2	CKS1	CKS0	WDT
H'FFFF8610	TCNT*3									
H'FFFF8611	TCNT*4									
H'FFFF8612	RSTCSR*3	WOVF	RSTE	—	—	—	—	—	—	
H'FFFF8613	RSTCSR*4	WOVF	RSTE	—	—	—	—	—	—	
H'FFFF8614	SBYCR	SBY	HIZ	—	—	—	—	—	—	Power-down state
H'FFFF8615 to H'FFFF861F	—	—	—	—	—	—	—	—	—	BSC
H'FFFF8620	BCR1	—	—	—	—	—	—	—	IOE	
H'FFFF8621		—	—	—	—	A3SZ	A2SZ	A1SZ	A0SZ	
H'FFFF8622	BCR2	IW31	IW30	IW21	IW20	IW11	IW10	IW01	IW00	
H'FFFF8623		CW3	CW2	CW1	CW0	SW3	SW2	SW1	SW0	
H'FFFF8624	WCR1	W33	W32	W31	W30	W23	W22	W21	W20	
H'FFFF8625		W13	W12	W11	W10	W03	W02	W01	W00	
H'FFFF8626	WCR2	—	—	—	—	—	—	—	—	
H'FFFF8627		—	—	DDW1	DDW0	DSW3	DSW2	DSW1	DSW0	
H'FFFF8628	RAMER	—	—	—	—	—	—	—	—	FLASH (F-ZTAT version only)
H'FFFF8629		—	—	—	—	—	RAMS	RAM1	RAM0	
H'FFFF862A	DCR	TPC	RCD	TRAS1	TRAS0	DWW1	DWW0	DWR1	DWR0	BSC
H'FFFF862B		DIW	—	BE	RASD	—	SZ0	AMX1	AMX0	
H'FFFF862C	RTCSR	—	—	—	—	—	—	—	—	
H'FFFF862D		—	CMF	CMIE	CKS2	CKS1	CKS0	RFSH	RMD	
H'FFFF862E	RTCNT	—	—	—	—	—	—	—	—	
H'FFFF862F										
H'FFFF8630	RTCOR	—	—	—	—	—	—	—	—	
H'FFFF8631										
H'FFFF8632 to H'FFFF86AF	—	—	—	—	—	—	—	—	—	

Address	Register Abbr.	Bit Names								Module
		Bit 7	Bit 6	Bit 5	Bit 4	Bit 3	Bit 2	Bit 1	Bit 0	
H'FFFF86B0	DMAOR	—	—	—	—	—	—	—	—	DMAC
H'FFFF86B1		—	—	—	—	—	AE	NMIF	DME	
H'FFFF86B2 to H'FFFF86BF	—	—	—	—	—	—	—	—	—	
H'FFFF86C0	SAR0									
H'FFFF86C1										
H'FFFF86C2										
H'FFFF86C3										
H'FFFF86C4	DAR0									
H'FFFF86C5										
H'FFFF86C6										
H'FFFF86C7										
H'FFFF86C8	DMATCR0									
H'FFFF86C9										
H'FFFF86CA										
H'FFFF86CB										
H'FFFF86CC	CHCR0	—	—	—	—	—	—	—	—	
H'FFFF86CD		—	—	—	—	—	RL	AM	AL	
H'FFFF86CE		DM1	DM0	SM1	SM0	RS3	RS2	RS1	RS0	
H'FFFF86CF		—	DS	TM	TS1	TS0	IE	TE	DE	
H'FFFF86D0	SAR1									
H'FFFF86D1										
H'FFFF86D2										
H'FFFF86D3										
H'FFFF86D4	DAR1									
H'FFFF86D5										
H'FFFF86D6										
H'FFFF86D7										
H'FFFF86D8	DMATCR1									
H'FFFF86D9										
H'FFFF86DA										
H'FFFF86DB										
H'FFFF86DC	CHCR1	—	—	—	—	—	—	—	—	
H'FFFF86DD		—	—	—	—	—	RL	AM	AL	
H'FFFF86DE		DM1	DM0	SM1	SM0	RS3	RS2	RS1	RS0	
H'FFFF86DF		—	DS	TM	TS1	TS0	IE	TE	DE	

Address	Register Abbr.	Bit Names								Module
		Bit 7	Bit 6	Bit 5	Bit 4	Bit 3	Bit 2	Bit 1	Bit 0	
H'FFFF87E0 to H'FFFF873F	—	—	—	—	—	—	—	—	—	—
H'FFFF8740	CCR	—	—	—	—	—	—	—	—	CAC
H'FFFF8741		—	—	—	CEDRAM	CECS3	CECS2	CECS1	CECS0	
H'FFFF8742 to H'FFFF87FF	—	—	—	—	—	—	—	—	—	

Notes: 1. Reserved bit in the SH7014.
2. In the SH7014, this address is reserved and must not be accessed.
3. Write address.
4. Read address. For details, see section 13.2.4, Notes on Register Access, in section 13, Watchdog Timer.

A.2 Functions

Register acronym | Start address | Access size | Module

Serial Mode Register (SMR)	H'FFFF81A0 (Channel 0) H'FFFF81B0 (Channel 1)	8/16	SCI

Register outline

Item	Bit							
	7	6	5	4	3	2	1	0
Bit Nmae	C/$\overline{A}$	CHR	PE	O/$\overline{E}$	STOP	MP	CKS1	CKS0
Initial value	0	0	0	0	0	0	0	0
R/W	R/W	R/W	R/W	R/W	R/W	R/W	R/W	R/W

Bit functions

Bit	Name	Value		Description
7	Communication Mode (C/$\overline{A}$)	0		Asynchronous mode
		1		Clock synchronous mode
6	Character Length (CHR)	0		8-bit data (Initial value)
		1		7-bit data (Initial value)
5	Parity Enable (PE)	0		Parity bit not added or checked (Initial value)
		1		Parity bit added and checked
4	Parity Mode (O/$\overline{E}$)	0		Even parity (Initial value)
		1		Odd parity
3	Stop Bit Length (STOP)	0		1 stop bit (Initial value)
		1		2 stop bits
2	Multiprocessor Mode (MP)	0		Multiprocessor function disabled (Initial value)
		1		Multiprocessor format selected
1, 0	Clock Select 1 and 0 (CKS1 and CKS0)	0	0	ϕ/4 (Initial value)
			1	ϕ/16
		1	0	ϕ/64
			1	ϕ/256

Bit numbers | Bit acronym | Initial bit values (When two or more bits are described as a set, the higher bits are on the left and the lower bits on the right.) | Descriptions of bit settings

INTC

Interrupt Priority Register A (IPRA)	H'FFFF8348	8/16/32

Item	Bit															
	15	14	13	12	11	10	9	8	7	6	5	4	3	2	1	0
Bit Name																
Initial value	0	0	0	0	0	0	0	0	0	0	0	0	0	0	0	0
R/W	R/W	R/W	R/W	R/W	R/W	R/W	R/W	R/W	R/W	R/W	R/W	R/W	R/W	R/W	R/W	R/W

Bit	Name	Description
15 to 12	(IRQ0 priority level setting)	Sets the IRQ0 priority level
11 to 8	(IRQ1 priority level setting)	Sets the IRQ1 priority level
7 to 4	(IRQ2 priority level setting)	Sets the IRQ2 priority level
3 to 0	(IRQ3 priority level setting)	Sets the IRQ3 priority level

Interrupt Priority Register B (IPRB)	H'FFFF834A	8/16/32

Item	Bit															
	15	14	13	12	11	10	9	8	7	6	5	4	3	2	1	0
Bit Name	—	—	—	—	—	—	—	—								
Initial value	0	0	0	0	0	0	0	0	0	0	0	0	0	0	0	0
R/W	R	R	R	R	R	R	R	R	R/W	R/W	R/W	R/W	R/W	R/W	R/W	R/W

Bit	Name	Description
7 to 4	(IRQ6 priority level setting)	Sets the IRQ6 priority level
3 to 0	(IRQ7 priority level setting)	Sets the IRQ7 priority level

INTC

Interrupt Priority Register C (IPRC)	H'FFFF834C	8/16/32

Item	Bit															
	15	14	13	12	11	10	9	8	7	6	5	4	3	2	1	0
Bit Name																
Initial value	0	0	0	0	0	0	0	0	0	0	0	0	0	0	0	0
R/W	R/W	R/W	R/W	R/W	R/W	R/W	R/W	R/W	R	R	R	R	R	R	R	R

Bit	Name	Description
15 to 12	(DMAC0 priority level setting)	Sets the DMAC0 priority level
11 to 8	(DMAC1 priority level setting)	Sets the DMAC1 priority level

Interrupt Priority Register D (IPRD)	H'FFFF834E	8/16/32

Item	Bit															
	15	14	13	12	11	10	9	8	7	6	5	4	3	2	1	0
Bit Name																
Initial value	0	0	0	0	0	0	0	0	0	0	0	0	0	0	0	0
R/W	R/W	R/W	R/W	R/W	R/W	R/W	R/W	R/W	R/W	R/W	R/W	R/W	R/W	R/W	R/W	R/W

Bit	Name	Description
15 to 12	(MTU0 priority level setting)	Sets the MTU0 priority level
11 to 8	(MTU0 priority level setting)	Sets the MTU0 priority level
7 to 4	(MTU1 priority level setting)	Sets the MTU1 priority level
3 to 0	(MTU1 priority level setting)	Sets the MTU1 priority level

INTC

Interrupt Priority Register E (IPRE)	H'FFFF8350	8/16/32

Item	Bit															
	15	14	13	12	11	10	9	8	7	6	5	4	3	2	1	0
Bit Name									—	—	—	—	—	—	—	—
Initial value	0	0	0	0	0	0	0	0	0	0	0	0	0	0	0	0
R/W	R/W	R/W	R/W	R/W	R/W	R/W	R/W	R/W	R	R	R	R	R	R	R	R

Bit	Name	Description
15 to 12	(MTU2 priority level setting)	Sets the MTU2 priority level
11 to 8	(MTU2 priority level setting)	Sets the MTU2 priority level

Interrupt Priority Register F (IPRF)	H'FFFF8352	8/16/32

Item	Bit															
	15	14	13	12	11	10	9	8	7	6	5	4	3	2	1	0
Bit Name	—	—	—	—	—	—	—	—								
Initial value	0	0	0	0	0	0	0	0	0	0	0	0	0	0	0	0
R/W	R	R	R	R	R	R	R	R	R/W	R/W	R/W	R/W	R/W	R/W	R/W	R/W

Bit	Name	Description
7 to 4	(SCI0 priority level setting)	Sets the SCI0 priority level
3 to 0	(SCI1 priority level setting)	Sets the SCI1 priority level

INTC

Interrupt Priority Register G (IPRG)	H'FFFF8354	8/16/32

Item	Bit															
	15	14	13	12	11	10	9	8	7	6	5	4	3	2	1	0
Bit Name					—	—	—	—								
Initial value	0	0	0	0	0	0	0	0	0	0	0	0	0	0	0	0
R/W	R/W	R/W	R/W	R/W	R	R	R	R	R/W	R/W	R/W	R/W	R/W	R/W	R/W	R/W

Bit	Name	Description
15 to 12	(A/D priority level setting)	Sets the A/D priority level
7 to 4	(CMT0 priority level setting)	Sets the CMT0 priority level
3 to 0	(CMT1 priority level setting)	Sets the CMT1 priority level

Interrupt Priority Register H (IPRH)	H'FFFF8356	8/16/32

Item	Bit															
	15	14	13	12	11	10	9	8	7	6	5	4	3	2	1	0
Bit Name					—	—	—	—	—	—	—	—	—	—	—	—
Initial value	0	0	0	0	0	0	0	0	0	0	0	0	0	0	0	0
R/W	R/W	R/W	R/W	R/W	R	R	R	R	R	R	R	R	R	R	R	R

Bit	Name	Description
15 to 12	(WDT and BSC priority level setting)	Set the WDT and BSC priority level

INTC

Interrupt Control Register (ICR)	H'FFFF8358	8/16/32

Item	Bit							
	15	14	13	12	11	10	9	8
Bit Name	NMIL	—	—	—	—	—	—	NMIE
Initial value	*	0	0	0	0	0	0	0
R/W	R	R	R	R	R	R	R	R/W
Item	7	6	5	4	3	2	1	0
Bit Name	IRQ0S	IRQ1S	IRQ2S	IRQ3S	—	—	IRQ6S	IRQ7S
Initial value	0	0	0	0	0	0	0	0
R/W	R/W	R/W	R/W	R/W	R	R	R/W	R/W

Note: * When NMI input is high: 1; when NMI input is low: 0

Bit	Name	Value	Description
15	NMI Input Level (NMIL)	0	NMI input level is low
		1	NMI input level is high
8	NMI Edge Select (NMIE)	0	Interrupt request is detected on falling edge of NMI input (initial value)
		1	Interrupt request is detected on rising edge of NMI input
7 to 4, 1, 0	IRQ0 to IRQ3, IRQ6, IRQ7 Sense Select (IRQ0S to IRQ3S, IRQ6S, IRQ7S)	0	Interrupt request is detected on low level of IRQ input (initial value)
		1	Interrupt request is detected on falling edge of IRQ input

INTC

IRQ Status Register (ISR)	H'FFFF835A	8/16/32

Item	Bit							
	15	14	13	12	11	10	9	8
Bit name	—	—	—	—	—	—	—	—
Initial value	0	0	0	0	0	0	0	0
R/W	R	R	R	R	R	R	R	R
Item	7	6	5	4	3	2	1	0
Bit name	IRQ0F	IRQ1F	IRQ2F	IRQ3F	—	—	IRQ6F	IRQ7F
Initial value	0	0	0	0	0	0	0	0
R/W	R/W	R/W	R/W	R/W	R	R	R/W	R/W

Bit	Name	Value	Detection Setting	Description
7 to 4, 1, 0	IRQ0 to IRQ3, IRQ6, IRQ7 Flags (IRQ0F to IRQ3F, IRQ6F, IRQ7F)	0	Level detection	No IRQn interrupt request exists. Clear condition: When $\overline{\text{IRQn}}$ input is high level
			Edge detection	No IRQn interrupt request was detected. (initial value) Clear conditions: 1. When a 0 is written after reading IRQnF = 1 status 2. When IRQn interrupt exception processing has been execute
		1	Level detection	An IRQn interrupt request exists. Set condition: When $\overline{\text{IRQn}}$ input is low level
			Edge detection	An IRQn interrupt request was detected. Set condition: When a falling edge occurs at an $\overline{\text{IRQn}}$ input

CAC

Cache Control Register (CCR)	H'FFFF8740	8/16/32

Item	Bit							
	15	14	13	12	11	10	9	8
Bit name	—	—	—	—	—	—	—	—
Initial value	*	*	*	*	*	*	*	*
R/W	R	R	R	R	R	R	R	R
Item	7	6	5	4	3	2	1	0
Bit name	—	—	—	CEDRAM	CECS3	CECS2	CECS1	CECS0
Initial value	*	*	*	0	0	0	0	0
R/W	R	R	R	R/W	R/W	R/W	R/W	R/W

Note: * Undefined

Bit	Name	Value	Description
4	DRAM Space Cache Enable (CEDRAM)	0	DRAM space cache disabled (initial value)
		1	DRAM space cache enabled
3	CS3 Space Cache Enable (CECS3)	0	CS3 space cache disabled (initial value)
		1	CS3 space cache enabled
2	CS2 Space Cache Enable (CECS2)	0	CS2 space cache disabled (initial value)
		1	CS2 space cache enabled
1	CS1 Space Cache Enable (CECS1)	0	CS1 space cache disabled (initial value)
		1	CS1 space cache enabled
0	CS0 Space Cache Enable (CECS0)	0	CS0 space cache disabled (initial value)
		1	CS0 space cache enabled

BSC

Bus Control Register 1 (BCR1)	H'FFFF8620	8/16/32

Item	Bit							
	15	14	13	12	11	10	9	8
Bit name	—	—	—	—	—	—	—	IOE
Initial value	0	0	0	0	0	0	0	0
R/W	R	R	R	R	R	R	R	R/W
Item	7	6	5	4	3	2	1	0
Bit name	—	—	—	—	A3SZ	A2SZ	A1SZ	A0SZ
Initial value	0	0	0	0	1	1	1	1
R/W	R	R	R	R	R/W	R/W	R/W	R/W

Bit	Name	Value	Description
8	Multiplex I/O Enable (IOE)	0	CS3 space is ordinary space (initial value)
		1	CS3 space is address/data multiplex I/O space
3	CS3 Space Size Specification (A3SZ)	0	Byte (8-bit) size
		1	Word (16-bit) size (initial value)
2	CS2 Space Size Specification (A2SZ)	0	Byte (8-bit) size
		1	Word (16-bit) size (initial value)
1	CS1 Space Size Specification (A1SZ)	0	Byte (8-bit) size
		1	Word (16-bit) size (initial value)
0	CS0 Space Size Specification (A0SZ)	0	Byte (8-bit) size
		1	Word (16-bit) size (initial value)

Note: A0SZ is effective only in on-chip ROM effective mode. In on-chip ROM ineffective mode, the CS0 space bus size is specified by the mode pin.

BSC

Bus Control Register 2 (BCR2)	H'FFFF8622	8/16/32

Item	Bit							
	15	14	13	12	11	10	9	8
Bit name	IW31	IW30	IW21	IW20	IW11	IW10	IW01	IW00
Initial value	1	1	1	1	1	1	1	1
R/W	R/W	R/W	R/W	R/W	R/W	R/W	R/W	R/W
Item	7	6	5	4	3	2	1	0
Bit name	CW3	CW2	CW1	CW0	SW3	SW2	SW1	SW0
Initial value	1	1	1	1	1	1	1	1
R/W	R/W	R/W	R/W	R/W	R/W	R/W	R/W	R/W

Bit	Name		Value		Description
15 to 8	Idles between Cycles (IW31, IW30, IW21, IW20, IW11, IW10, IW01, IW00)	IW31, IW30	0	0	No idle cycle after accessing CS3 space
				1	Inserts one idle cycle
			1	0	Inserts two idle cycles
				1	Inserts three idle cycles (initial value)
		IW21, IW20	0	0	No idle cycle after accessing CS2 space
				1	Inserts one idle cycle
			1	0	Inserts two idle cycles
				1	Inserts three idle cycles (initial value)
		IW11, IW10	0	0	No idle cycle after accessing CS1 space
				1	Inserts one idle cycle
			1	0	Inserts two idle cycles
				1	Inserts three idle cycles (initial value)
		IW01, IW00	0	0	No idle cycle after accessing CS0 space
				1	Inserts one idle cycle
			1	0	Inserts two idle cycles
				1	Inserts three idle cycles (initial value)
7	Idle Specification for Continuous Access (CW3)		0		No CS3 space continuous access idle cycles
			1		One CS3 space continuous access idle cycle (initial value)
6	Idle Specification for Continuous Access (CW2)		0		No CS2 space continuous access idle cycles
			1		One CS2 space continuous access idle cycle (initial value)
5	Idle Specification for Continuous Access (CW1)		0		No CS1 space continuous access idle cycles
			1		One CS1 space continuous access idle cycle (initial value)
4	Idle Specification for Continuous Access (CW0)		0		No CS0 space continuous access idle cycles
			1		One CS0 space continuous access idle cycle (initial value)
3	$\overline{CS}$ Assert Extension Specification (SW3)		0		No CS3 space $\overline{CS}$ assert extension
			1		CS3 space $\overline{CS}$ assert extension (initial value)

BSC

Bit	Name	Value	Description
2	$\overline{CS}$ Assert Extension Specification (SW2)	0	No CS2 space $\overline{CS}$ assert extension
		1	CS2 space $\overline{CS}$ assert extension (initial value)
1	$\overline{CS}$ Assert Extension Specification (SW1)	0	No CS1 space $\overline{CS}$ assert extension
		1	CS1 space $\overline{CS}$ assert extension (initial value)
0	$\overline{CS}$ Assert Extension Specification (SW0)	0	No CS0 space $\overline{CS}$ assert extension
		1	CS0 space $\overline{CS}$ assert extension (initial value)

BSC

Wait Control Register 1 (WCR1)	H'FFFF8624	8/16/32

Item	Bit															
	15	14	13	12	11	10	9	8	7	6	5	4	3	2	1	0
Bit name	W33	W32	W31	W30	W23	W22	W21	W20	W13	W12	W11	W10	W03	W02	W01	W00
Initial value	1	1	1	1	1	1	1	1	1	1	1	1	1	1	1	1
R/W	R/W	R/W	R/W	R/W	R/W	R/W	R/W	R/W	R/W	R/W	R/W	R/W	R/W	R/W	R/W	R/W

Bit	Name	Value				Description
15 to 12	CS3 Space Wait Specification (W33 to W30)	0	0	0	0	No wait (external wait input disabled)
		0	0	0	1	1 wait external wait input enabled
		…				
		1	1	1	1	15 wait external wait input enabled (initial value)
11 to 8	CS2 Space Wait Specification (W23 to W20)	0	0	0	0	No wait (external wait input disabled)
		0	0	0	1	1 wait external wait input enabled
		…				
		1	1	1	1	15 wait external wait input enabled (initial value)
7 to 4	CS1 Space Wait Specification (W13 to W10)	0	0	0	0	No wait (external wait input disabled)
		0	0	0	1	1 wait external wait input enabled
		…				
		1	1	1	1	15 wait external wait input enabled (initial value)
3 to 0	CS0 Space Wait Specification (W03 to W00)	0	0	0	0	No wait (external wait input disabled)
		0	0	0	1	1 wait external wait input enabled
		…				
		1	1	1	1	15 wait external wait input enabled (initial value)

BSC

Wait Control Register 2 (WCR2)	H'FFFF8626	8/16/32

Item	Bit							
	15	14	13	12	11	10	9	8
Bit name	—	—	—	—	—	—	—	—
Initial value	0	0	0	0	0	0	0	0
R/W	R	R	R	R	R	R	R	R
Item	7	6	5	4	3	2	1	0
Bit name	—	—	DDW1	DDW0	DSW3	DSW2	DSW1	DSW0
Initial value	0	0	0	0	1	1	1	1
R/W	R	R	R/W	R/W	R/W	R/W	R/W	R/W

Bit	Name	Value				Description
5, 4	DRAM Space DMA Single Address Mode Access Wait Specification (DDW1, DDW0)	0		0		2-cycle (no wait) external wait disabled (initial value)
		0		1		3-cycle (1 wait) external wait disabled
		1		0		4-cycle (2 wait) external wait enabled
		1		1		5-cycle (3 wait) external wait enabled
3 to 0	CS Space DMA Single Address Mode Access Wait Specification (DSW3 to DSW0)	0	0	0	0	No wait (external wait input disabled)
		0	0	0	1	1 wait (external wait input enabled)
		…				
		1	1	1	1	15 wait (external wait input enabled) (initial value)

DRAM Area Control Register (DCR)	H'FFFF862A	8/16/32

Item	Bit							
	15	14	13	12	11	10	9	8
Bit name	TPC	RCD	TRAS1	TRAS0	DWW1	DWW0	DWR1	DWR0
Initial value	0	0	0	0	0	0	0	0
R/W	R/W	R/W	R/W	R/W	R/W	R/W	R/W	R/W
Item	7	6	5	4	3	2	1	0
Bit name	DIW	—	BE	RASD	—	SZ0	AMX1	AMX0
Initial value	0	0	0	0	0	0	0	0
R/W	R/W	R	R/W	R/W	R	R/W	R/W	R/W

BSC

Bit	Name	Value		Description
15	RAS Precharge Cycle Count (TPC)	0		1.5 cycles (initial value)
		1		2.5 cycles
14	RAS—CAS Delay Cycle Count (RCD)	0		1 cycle (initial value)
		1		2 cycles
13, 12	CAS—Before-RAS Refresh RAS Assert Cycle Count (TRAS1 and TRAS0)	0	0	2.5 cycles (initial value)
		0	1	3.5 cycles
		1	0	4.5 cycles
		1	1	5.5 cycles
11, 10	DRAM Write Cycle Wait Count (DWW1 and DWW0)	0	0	2-cycle (no wait) external wait disabled (initial value)
		0	1	3-cycle (1 wait) external wait disabled
		1	0	4-cycle (2 wait) external wait enabled
		1	1	5-cycle (3 wait) external wait enabled
9, 8	DRAM Read Cycle Wait Count (DWR1 and DWR0)	0	0	2-cycle (no wait) external wait disabled (initial value)
		0	1	3-cycle (1 wait) external wait disabled
		1	0	4-cycle (2 wait) external wait enabled
		1	1	5-cycle (3 wait) external wait enabled
7	DRAM Idle Cycle Count (DIW)	0		No idle cycles (initial value)
		1		1 idle cycle
5	Burst Enable (BE)	0		Burst disabled (initial value)
		1		DRAM high-speed page mode enabled
4	RAS Down Mode (RASD)	0		Access DRAM by RAS up mode (initial value)
		1		Access DRAM by RAS down mode
2	DRAM Bus Width Specification (SZ0)	0		Byte (8-bit) (initial value)
		1		Word (16-bit)
1, 0	DRAM Address Multiplex (AMX1 and AMX0)	0	0	9 bit (initial value)
		0	1	10 bit
		1	0	11 bit
		1	1	12 bit

BSC

Refresh Timer Control/Status Register (RTCSR)	H'FFFF862C	8/16/32

Item	Bit							
	15	14	13	12	11	10	9	8
Bit name	—	—	—	—	—	—	—	—
Initial value	0	0	0	0	0	0	0	0
R/W	R	R	R	R	R	R	R	R
Item	7	6	5	4	3	2	1	0
Bit name	—	CMF	CMIE	CKS2	CKS1	CKS0	RFSH	RMD
Initial value	0	0	0	0	0	0	0	0
R/W	R	R/W	R/W	R/W	R/W	R/W	R/W	R/W

Bit	Name	Value			Description
6	Compare Match Flag (CMF)	0			Clear condition: After RTCSR is read when CMF is 1, 0 is written in CMF (initial value)
		1			Set condition: RTCNT = RTCOR Note: When both RTCNT and RTCOR are in an initialized state (when values have not been rewritten since initialization, and RTCNT has not had its value changed due to a countup), RTCNT and RTCOR match, as both are H'0000, but in this case CMF is not set.
5	Compare Match Interrupt Enable (CMIE)	0			Disables an interrupt request caused by CMF (initial value)
		1			Enables an interrupt request caused by CMF
4 to 2	Clock Select (CKS2 to CKS0)	0	0	0	Stops count-up (initial value)
				1	$\phi/2$
			1	0	$\phi/8$
				1	$\phi/32$
		1	0	0	$\phi/128$
				1	$\phi/512$
			1	0	$\phi/2048$
				1	$\phi/4096$
1	Refresh Control (RFSH)	0			Do not refresh DRAM (initial value)
		1			Refresh DRAM
0	Refresh Mode (RMD)	0			CAS-before-RAS refresh (initial value)
		1			Self-refresh

BSC

Refresh Timer Counter (RTCNT)	H'FFFF862E	8/16/32

Item	Bit															
	15	14	13	12	11	10	9	8	7	6	5	4	3	2	1	0
Bit name	—	—	—	—	—	—	—	—								
Initial value	0	0	0	0	0	0	0	0	0	0	0	0	0	0	0	0
R/W	R	R	R	R	R	R	R	R	R/W	R/W	R/W	R/W	R/W	R/W	R/W	R/W

Refresh Time Constant Register (RTCOR)	H'FFFF8630	8/16/32

Item	Bit															
	15	14	13	12	11	10	9	8	7	6	5	4	3	2	1	0
Bit name	—	—	—	—	—	—	—	—								
Initial value	0	0	0	0	0	0	0	0	0	0	0	0	0	0	0	0
R/W	R	R	R	R	R	R	R	R	R/W	R/W	R/W	R/W	R/W	R/W	R/W	R/W

DMAC

DMA Source Address Registers 0, 1 (SAR0, SAR1)	H'FFFF86C0 (Channel 0) H'FFFF86D0 (Channel 1)	16/32

Item	Bit										
	31	30	29	28	27	26	25	24	23	.....	0
Bit name										.....	
Initial value	—	—	—	—	—	—	—	—	—	.....	—
R/W	R/W	R/W	R/W	R/W	R/W	R/W	R/W	R/W	R/W	.....	R/W

DMA Destination Address Registers 0, 1 (DAR0, DAR1)	H'FFFF86C4 (Channel 0) H'FFFF86D4 (Channel 1)	16/32

Item	Bit										
	31	30	29	28	27	26	25	24	23	.....	0
Bit name										.....	
Initial value	—	—	—	—	—	—	—	—	—	.....	—
R/W	R/W	R/W	R/W	R/W	R/W	R/W	R/W	R/W	R/W	.....	R/W

DMA Transfer Count Registers 0, 1 (DMATCR0, DMATCR1)	H'FFFF86C8 (Channel 0) H'FFFF86D8 (Channel 1)	16/32

Item	Bit															
	31	30	29	28	27	26	25	24	23	22	21	20	19	18	17	16
Bit name	—	—	—	—	—	—	—	—	—	—	—	—	—	—	—	—
Initial value	0	0	0	0	0	0	0	0	0	0	0	0	0	0	0	0
R/W	R	R	R	R	R	R	R	R	R	R	R	R	R	R	R	R
Item	15	14	13	12	11	10	9	8	7	6	5	4	3	2	1	0
Bit name																
Initial value	—	—	—	—	—	—	—	—	—	—	—	—	—	—	—	—
R/W	R/W	R/W	R/W	R/W	R/W	R/W	R/W	R/W	R/W	R/W	R/W	R/W	R/W	R/W	R/W	R/W

DMAC

DMA Channel Control Registers 0, 1 (CHCR0, CHCR1)	H'FFFF86CC (Channel 0) H'FFFF86DC (Channel 1)	8/16/32

Item	Bit							
	31	30	29	28	27	26	25	24
Bit name	—	—	—	—	—	—	—	—
Initial value	0	0	0	0	0	0	0	0
R/W	R	R	R	R	R	R	R	R
Item	23	22	21	20	19	18	17	16
Bit name	—	—	—	—	—	RL	AM	AL
Initial value	0	0	0	0	0	0	0	0
R/W	R	R	R	R	R	R/W	R/W	R/W
Item	15	14	13	12	11	10	9	8
Bit name	DM1	DM0	SM1	SM0	RS3	RS2	RS1	RS0
Initial value	0	0	0	0	0	0	0	0
R/W	R/W	R/W	R/W	R/W	R/W	R/W	R/W	R/W
Item	7	6	5	4	3	2	1	0
Bit name	—	DS	TM	TS1	TS0	IE	TE	DE
Initial value	0	0	0	0	0	0	0	0
R/W	R	R/W	R/W	R/W	R/W	R/W	R/(W)	R/W

Bit	Name	Value		Description
18	Request Check Level (RL)	0		Output DRAK with active high (initial value)
		1		Output DRAK with active low
17	Acknowledge Mode (AM)	0		Outputs DACK during read cycle (initial value)
		1		Outputs DACK during write cycle
16	Acknowledge Level (AL)	0		Active high output (initial value)
		1		Active low output
15, 14	Destination Address Mode 1, 0 (DM1 and DM0)	0	0	Destination address fixed (initial value)
			1	Destination address incremented (+1 during 8-bit transfer, +2 during 16-bit transfer, +4 during 32-bit transfer)
		1	0	Destination address decremented (–1 during 8-bit transfer, –2 during 16-bit transfer, –4 during 32-bit transfer)
			1	(Setting prohibited)

DMAC

Bit	Name	Value				Description
13, 12	Source Address Mode 1, 0 (SM1 and SM0)	0		0		Source address fixed (initial value)
				1		Source address incremented (+1 during 8-bit transfer, +2 during 16-bit transfer, +4 during 32-bit transfer)
		1		0		Source address decremented (–1 during 8-bit transfer, –2 during 16-bit transfer, –4 during 32-bit transfer)
				1		(Setting prohibited)
11 to 8	Resource Select 3 to 0 (RS3 to RS0)	0	0	0	0	External request, dual address mode (initial value)
					1	(Prohibited)
				1	0	External request, single address mode. External address space → external device.
					1	External request, single address mode. External device → external address space.
			1	0	0	Auto-request
					1	(Prohibited)
				1	0	MTUTGI0A
					1	MTUTGI1A
		1	0	0	0	MTUTGI2A
					1	(Prohibited)
				1	0	(Prohibited)
					1	A/D ADI
			1	0	0	SCI0TXI0
					1	RXI0
				1	0	SCI1TXI1
					1	RXI1
6	$\overline{\text{DREQ}}$ Select (DS)	0				Low-level detection (initial value)
		1				Falling-edge detection
5	Transfer Mode (TM)	0				Cycle steal mode (initial value)
		1				Burst mode
4, 3	Transfer Size 1, 0 (TS1, TS0)	0		0		Specifies byte size (8 bits) (initial value)
				1		Specifies word size (16 bits)
		1		0		Specifies longword size (32 bits)
				1		(Prohibited)
2	Interrupt Enable (IE)	0				Interrupt request not generated after DMATCR—specified transfer count (initial value)
		1				Interrupt request enabled on completion of DMATCR specified number of transfers

DMAC

Bit	Name	Value	Description
1	Transfer End Flag (TE)	0	DMATCR—specified transfer count not ended (initial value) Clear condition: 0 write after TE = 1 read, Power-on reset, standby mode
		1	DMATCR specified number of transfers completed
0	DMAC Enable (DE)	0	Operation of the corresponding channel disabled (initial value)
		1	Operation of the corresponding channel enabled

DMAC Operation Register (DMAOR)	H'FFFF86B0	8/16/32

Item	Bit							
	15	14	13	12	11	10	9	8
Bit name	—	—	—	—	—	—	—	—
Initial value	0	0	0	0	0	0	0	0
R/W	R	R	R	R	R	R	R	R
Item	7	6	5	4	3	2	1	0
Bit name	—	—	—	—	—	AE	NMIF	DME
Initial value	0	0	0	0	0	0	0	0
R/W	R	R	R	R	R	R/(W)	R/(W)*	R/W*

Note: * 0 write only is valid after 1 is read.

Bit	Name	Value	Description
2	Address Error Flag (AE)	0	No address error, DMA transfer enabled (initial value) Clearing condition: Write AE = 0 after reading AE = 1
		1	Address error, DMA transfer disabled Setting condition: Address error due to DMAC
1	NMI Flag (NMIF)	0	No NMI interrupt, DMA transfer enabled (initial value) Clearing condition: Write NMIF = 0 after reading NMIF = 1
		1	NMI has occurred, DMC transfer prohibited Set condition: NMI interrupt occurrence
0	DMAC Master Enable (DME)	0	Disable operation on all channels (initial value)
		1	Enable operation on all channels

MTU

Timer Control Register 0 (TCR0)	H'FFFF8260	8/16/32

Item	Bit							
	7	6	5	4	3	2	1	0
Bit name	CCLR2	CCLR1	CCLR0	CKEG1	CKEG0	TPSC2	TPSC1	TPSC0
Initial value	0	0	0	0	0	0	0	0
R/W	R/W	R/W	R/W	R/W	R/W	R/W	R/W	R/W

Bit	Name	Value			Description
7 to 5	Counter Clear 2 to 0 (CCLR2 to CCLR0)	0	0	0	TCNT clear disabled (initial value)
				1	TCNT is cleared by TGRA compare-match or input captur
			1	0	TCNT is cleared by TGRB compare-match or input capture
				1	Synchronizing clear: TCNT is cleared in synchronization with clear of other channel counters operating in sync.*1
		1	0	0	TCNT clear disabled
				1	TCNT is cleared by TGRC compare-match or input capture*2
			1	0	TCNT is cleared by TGRD compare-match or input capture*2
				1	Synchronizing clear: TCNT is cleared in synchronization with clear of other channel counters operating in sync*1
4, 3	Clock Edge 1, 0 (CKEG1 and CKEG0)*4	0		0	Count on rising edges (initial value)
				1	Count on falling edges
		1		X*3	Count on both rising and falling edges
2 to 0	Timer Prescaler 2 to 0 (TPSC2 to TPSC0)	0	0	0	Internal clock: count with ϕ/1 (initial value)
				1	Internal clock: count with ϕ/4
			1	0	Internal clock: count with ϕ/16
				1	Internal clock: count with ϕ/64
		1	0	0	External clock: count with the TCLKA pin input
				1	External clock: count with the TCLKB pin input
			1	0	External clock: count with the TCLKC pin input
				1	External clock: count with the TCLKD pin input

Notes: 1. Setting the SYNC bit of the TSYR to 1 sets the synchronization.

2. When TGRC or TGRD are functioning as buffer registers, TCNT is not cleared because the buffer registers have priority and compare-match/input captures do not occur.

3. X: 0 or 1, don't care.

4. Internal clock edge selection is effective when the input clock is ϕ/4 or slower. These settings are ignored when ϕ/1, or the overflow/underflow of another channel is selected for the input clock.

MTU

Timer Mode Register 0 (TMDR0)	H'FFFF8261	8/16/32

Item	Bit							
	7	6	5	4	3	2	1	0
Bit name	—	—	BFB	BFA	MD3	MD2	MD1	MD0
Initial value	1	1	0	0	0	0	0	0
R/W	R	R	R/W	R/W	R/W	R/W	R/W	R/W

Bit	Name	Value				Description
5	Buffer Operation B (BFB)	0				TGRB operates normally (initial value)
		1				TGRB and TGRD buffer operation
4	Buffer Operation A (BFA)	0				TGRA operates normally (initial value)
		1				TGRA and TGRC buffer operation
3 to 0	Modes 3 to 0 (MD3 to MD0)	0	0	0	0	Normal operation (initial value)
					1	Reserved (do not set)
				1	0	PWM mode 1
					1	PWM mode 2
			1	0	0	Reserved (do not set)
					1	Reserved (do not set)
				1	0	Reserved (do not set)
					1	Reserved (do not set)
		1	0	0	0	Reserved (do not set)
					1	Reserved (do not set)
				1	0	Reserved (do not set)
					1	Reserved (do not set)
			1	0	0	Reserved (do not set)
					1	Reserved (do not set)
				1	0	Reserved (do not set)
					1	Reserved (do not set)

MTU

Timer I/O Control Register 0H (TIOR0H)	H'FFFF8262	8/16/32

Item	Bit							
	7	6	5	4	3	2	1	0
Bit name	IOB3	IOB2	IOB1	IOB0	IOA3	IOA2	IOA1	IOA0
Initial value	0	0	0	0	0	0	0	0
R/W	R/W	R/W	R/W	R/W	R/W	R/W	R/W	R/W

Bit	Name	Value				Description		
7 to 4	I/O Control B3 to B0 (IOB3 to IOB0)	0	0	0	0	TGR0B is an output compare register	Output disabled	(initial value)
					1		Initial output is 0	Output 0 on compare-match
				1	0			Output 1 on compare-match
					1			Toggle output on compare-match
			1	0	0		Output disabled	
					1		Initial output is 1	Output 0 on compare-match
				1	0			Output 1 on compare-match
					1			Toggle output on compare-match
		1	0	0	0	TGR0B is an input capture register	Capture input source is the TIOC0B pin	Input capture on rising edge
					1			Input capture on falling edge
				1	0			Input capture on both edges
					1			
			1	0	0		Capture input source is channel 1/ count clock	Input capture on TCNT1 count up/count down
					1			
				1	0			
					1			

MTU

Bit	Name	Value				Description		
3 to 0	I/O Control A3 to A0 (IOA3 to IOA0)	0	0	0	0	TGR0A is an output compare register	Output disabled	(initial value)
					1		Initial output is 0	Output 0 on compare-match
				1	0			Output 1 on compare-match
					1			Toggle output on compare-match
			1	0	0		Output disabled	
					1		Initial output is 1	Output 0 on compare-match
				1	0			Output 1 on compare-match
					1			Toggle output on compare-match
		1	0	0	0	TGR0A is an input capture register	Capture input source is the TIOC0A pin	Input capture on rising edge
					1			Input capture on falling edge
				1	0			Input capture on both edges
					1			
			1	0	0		Capture input source is channel 1/ count clock	Input capture on TCNT1 count up/count down
					1			
				1	0			
					1			

MTU

Timer I/O Control Register 0L (TIOR0L)	H'FFFF8263	8/16/32

Item	Bit							
	7	6	5	4	3	2	1	0
Bit name	IOD3	IOD2	IOD1	IOD0	IOC3	IOC2	IOC1	IOC0
Initial value	0	0	0	0	0	0	0	0
R/W	R/W	R/W	R/W	R/W	R/W	R/W	R/W	R/W

Bit	Name	Value				Description		
7 to 4	I/O Control D3 to D0 (IOD3 to IOD0)	0	0	0	0	TGR0D is an output compare register	Output disabled	(initial value)
					1		Initial output is 0	Output 0 on compare-match
				1	0			Output 1 on compare-match
					1			Toggle output on compare-match
			1	0	0		Output disabled	
					1		Initial output is 1	Output 0 on compare-match
				1	0			Output 1 on compare-match
					1			Toggle output on compare-match
		1	0	0	0	TGR0D is an input capture register	Capture input source is the TIOC0D pin	Input capture on rising edge
					1			Input capture on falling edge
				1	0			Input capture on both edges
					1			
			1	0	0		Capture input source is channel 1/ count clock	Input capture on TCNT1 count up/count down
					1			
				1	0			
					1			

MTU

Bit	Name	Value				Description		
3 to 0	I/O Control C3 to C0 (IOC3 to IOC0)	0	0	0	0	TGR0C is an output compare register	Output disabled (initial value)	
					1		Initial output is 0	Output 0 on compare-match
				1	0			Output 1 on compare-match
					1			Toggle output on compare-match
			1	0	0		Output disabled	
					1		Initial output is 1	Output 0 on compare-match
				1	0			Output 1 on compare-match
					1			Toggle output on compare-match
		1	0	0	0	TGR0C is an input capture register	Capture input source is the TIOC0C pin	Input capture on rising edge
					1			Input capture on falling edge
				1	0			Input capture on both edges
					1			
			1	0	0		Capture input source is channel 1/ count clock	Input capture on TCNT1 count up/count down
					1			
				1	0			
					1			

Notes: 1. When the BFB bit of TMDR0 is set to 1 and TGR0D is being used as a buffer register, these settings become ineffective and input capture/output compares do not occur.

2. When the BFA bit of TMDR0 is set to 1 and TGR0C is being used as a buffer register, these settings become ineffective and input capture/output compares do not occur.

MTU

Timer Interrupt Enable Register 0 (TIER0)	H'FFFF8264	8/16/32

Item	Bit							
	7	6	5	4	3	2	1	0
Bit name	TTGE	—	—	TCIEV	TGIED	TGIEC	TGIEB	TGIEA
Initial value	0	0	0	0	0	0	0	0
R/W	R/W	R	R	R/W	R/W	R/W	R/W	R/W

Bit	Name	Value	Description
7	A/D Conversion Start Request Enable (TTGE)	0	Disable A/D conversion start requests (initial value)
		1	Enable A/D conversion start request generation
4	Overflow Interrupt Enable (TCIEV)	0	Disable TCFV interrupt requests (TCIV) (initial value)
		1	Enable TCFV interrupt requests (TCIV)
3	TGR Interrupt Enable D (TGIED)	0	Disable interrupt requests (TGID) due to the TGFD bit (initial value)
		1	Enable interrupt requests (TGID) due to the TGFD bit
2	TGR Interrupt Enable C (TGIEC)	0	Disable interrupt requests (TGIC) due to the TGFC bit (initial value)
		1	Enable interrupt requests (TGIC) due to the TGFC bit
1	TGR Interrupt Enable B (TGIEB)	0	Disable interrupt requests (TGIB) due to the TGFB bit (initial value)
		1	Enable interrupt requests (TGIB) due to the TGFB bit
0	TGR Interrupt Enable A (TGIEA)	0	Disable interrupt requests (TGIA) due to the TGFA bit (initial value)
		1	Enable interrupt requests (TGIA) due to the TGFA bit

MTU

Timer Status Register 0 (TSR0)	H'FFFF8265	8/16/32

Item	Bit							
	7	6	5	4	3	2	1	0
Bit name	—	—	—	TCFV	TGFD	TGFC	TGFB	TGFA
Initial value	1	1	0	0	0	0	0	0
R/W	R	R	R	R/(W)*	R/(W)*	R/(W)*	R/(W)*	R/(W)*

Note: * Only 0 writes to clear the flags are possible.

Bit	Name	Value	Description
4	Overflow Flag (TCFV)	0	Clear condition: With TCFV = 1, a 0 write to TCFV after reading it (initial value)
		1	Set condition: When the TCNT value overflows (H'FFFF → H'0000) (initial value)
3	Input Capture/Output Compare Flag D (TGFD)	0	Clear condition: With TGFD = 1, a 0 write to TGFD following a read (initial value)
		1	Set conditions: • When TGRD is functioning as an output compare register (TCNT = TGRD) • When TGRD is functioning as input capture (the TCNT value is sent to TGRD by the input capture signal)
2	Input Capture/Output Compare Flag C (TGFC)	0	Clear condition: With TGFC = 1, a 0 write to TGFC following a read (initial value)
		1	Set conditions: • When TGRC is functioning as an output compare register (TCNT = TGRC) • When TGRC is functioning as input capture (the TCNT value is sent to TGRC by the input capture signal)
1	Input Capture/Output Compare Flag B (TGFB)	0	Clear condition: With TGFB = 1, a 0 write to TGFB following a read (initial value)
		1	Set conditions: • When TGRB is functioning as an output compare register (TCNT = TGRB) • When TGRB is functioning as input capture (the TCNT value is sent to TGRB by the input capture signal)

MTU

Bit	Name	Value	Description
0	Input Capture/Output Compare Flag A (TGFA)	0	Clear condition: With TGFA = 1, a 0 write to TGFA following a read* (initial value)
		1	Set conditions: • When TGRA is functioning as an output compare register (TCNT = TGRA) • When TGRA is functioning as input capture (the TCNT value is sent to TGRA by the input capture signal)

Note: * Cleared by DMAC transfer due to TGFA.

Timer Counters 0 (TCNT0)	H'FFFF8266	16/32

Item	Bit															
	15	14	13	12	11	10	9	8	7	6	5	4	3	2	1	0
Bit name																
Initial value	0	0	0	0	0	0	0	0	0	0	0	0	0	0	0	0
R/W	R/W	R/W	R/W	R/W	R/W	R/W	R/W	R/W	R/W	R/W	R/W	R/W	R/W	R/W	R/W	R/W

Timer General Register 0 (TGR0)	H'FFFF8268 (0A) H'FFFF826A (0B) H'FFFF826C (0C) H'FFFF826E (0D)	16/32

Item	Bit															
	15	14	13	12	11	10	9	8	7	6	5	4	3	2	1	0
Bit name																
Initial value	1	1	1	1	1	1	1	1	1	1	1	1	1	1	1	1
R/W	R/W	R/W	R/W	R/W	R/W	R/W	R/W	R/W	R/W	R/W	R/W	R/W	R/W	R/W	R/W	R/W

MTU

Timer Control Register 1 (TCR1)	H'FFFF8280	8/16/32

Item	Bit							
	7	6	5	4	3	2	1	0
Bit name	—	CCLR1	CCLR0	CKEG1	CKEG0	TPSC2	TPSC1	TPSC0
Initial value	0	0	0	0	0	0	0	0
R/W	R	R/W	R/W	R/W	R/W	R/W	R/W	R/W

Bit	Name	Value			Description
7 to 5	Counter Clear 2 to 0 (Reserved*[2], CCLR1, CCLR0)	0	0	0	TCNT clear disabled (initial value)
				1	TCNT is cleared by TGRA compare-match or input capture
			1	0	TCNT is cleared by TGRB compare-match or input capture
				1	Synchronizing clear: TCNT is cleared in synchronization with clear of other channel counters operating in sync*[1]
4, 3	Clock Edge 1, 0 (CKEG1, CKEG0)*[5]	0		0	Count on rising edges (initial value)
				1	Count on falling edges
		1		X*[3]	Count on both rising and falling edges
2 to 0*[4]	Timer Prescaler 2 to 0 (TPSC2 to TPSC0)	0	0	0	Internal clock: count with ϕ/1 (initial value)
				1	Internal clock: count with ϕ/4
			1	0	Internal clock: count with ϕ/16
				1	Internal clock: count with ϕ/64
		1	0	0	External clock: count with the TCLKA pin input
				1	External clock: count with the TCLKB pin input
			1	0	Internal clock: count with ϕ/256
				1	Count with the TCNT2 overflow/underflow

Notes:
1. Setting the SYNC bit of the TSYR to 1 sets the synchronization.
2. The bit 7 of channels 1 is reserved. It always reads 0, and cannot be modified.
3. X: 0 or 1, don't care.
4. These settings are ineffective when channel 1 is in phase counting mode.
5. Internal clock edge selection is effective when the input clock is ϕ/4 or slower. These settings are ignored when ϕ/1, or the overflow/underflow of another channel is selected for the input clock.

MTU

Timer Mode Register 1 (TMDR1)	H'FFFF8281	8/16/32

Item	Bit							
	7	6	5	4	3	2	1	0
Bit name	—	—	—	—	MD3	MD2	MD1	MD0
Initial value	1	1	0	0	0	0	0	0
R/W	R	R	R	R	R/W	R/W	R/W	R/W

Bit	Name	Value				Description
3 to 0	Modes 3 to 0 (MD3 to MD0)	0	0	0	0	Normal operation (Initial value)
					1	Reserved (do not set)
				1	0	PWM mode 1
					1	PWM mode 2
			1	0	0	Phase counting mode 1
					1	Phase counting mode 2
				1	0	Phase counting mode 3
					1	Phase counting mode 4
		1	0	0	0	Reserved (do not set)
					1	Reserved (do not set)
				1	0	Reserved (do not set)
					1	Reserved (do not set)
			1	0	0	Reserved (do not set)
					1	Reserved (do not set)
				1	0	Reserved (do not set)
					1	Reserved (do not set)

MTU

Timer I/O Control Register 1 (TIOR1)	H'FFFF8282	8/16/32

Item	Bit							
	7	6	5	4	3	2	1	0
Bit name	IOB3	IOB2	IOB1	IOB0	IOA3	IOA2	IOA1	IOA0
Initial value	0	0	0	0	0	0	0	0
R/W	R/W	R/W	R/W	R/W	R/W	R/W	R/W	R/W

Bit	Name	Value				Description		
7 to 4	I/O Control B3 to B0 (IOB3 to IOB0)	0	0	0	0	TGR1B is an output compare register	Output disabled	(initial value)
					1		Initial output is 0	Output 0 on compare-match
				1	0			Output 1 on compare-match
					1			Toggle output on compare-matc
			1	0	0		Output disabled	
					1		Initial output is 1	Output 0 on compare-match
				1	0			Output 1 on compare-match
					1			Toggle output on compare-matc
		1	0	0	0	TGR1B is an output compare register	Capture input source is the TIOC1B pin	Input capture on rising edge
					1			Input capture on falling edge
				1	0			Input capture on both edges
					1			
			1	0	0		Capture input source TGR0C compare/match input capture	Input capture on channel 0/TGR0C compare-match/input capture generation
					1			
				1	0			
					1			

MTU

Bit	Name	Value				Description		
3 to 0	I/O Control A3 to A0 (IOA3 to IOA0)	0	0	0	0	TGR1A is an output compare register	Output disabled (initial value)	
					1		Initial output is 0	Output 0 on compare-match
				1	0			Output 1 on compare-match
					1			Toggle output on compare-match
			1	0	0		Output disabled	
					1		Initial output is 1	Output 0 on compare-match
				1	0			Output 1 on compare-match
					1			Toggle output on compare-match
		1	0	0	0	TGR1A is an input capture register	Capture input source is the TIOC1A pin	Input capture on rising edge
					1			Input capture on falling edge
				1	0			Input capture on both edges
					1			
			1	0	0		Capture input source TGR0A compare/match input capture	Input capture on channel 0/TGR0A compare-match/input capture generation
					1			
				1	0			
					1			

MTU

Timer Interrupt Enable Register 1 (TIER1)	H'FFFF8284	8/16/32

Item	Bit							
	7	6	5	4	3	2	1	0
Bit name	TTGE	—	TCIEU	TCIEV	—	—	TGIEB	TGIEA
Initial value	0	1	0	0	0	0	0	0
R/W	R/W	R	R/W	R/W	R	R	R/W	R/W

Bit	Name	Value	Description
7	A/D Conversion Start Request Enable (TTGE)	0	Disable A/D conversion start requests (initial value)
		1	Enable A/D conversion start request generation
5	Underflow Interrupt Enable (TCIEU)	0	Disable UDF interrupt requests (TCIU) (initial value)
		1	Enable UDF interrupt requests (TCIU)
4	Overflow Interrupt Enable (TCIEV)	0	Disable TCFV interrupt requests (TCIV) (initial value)
		1	Enable TCFV interrupt requests (TCIV)
1	TGR Interrupt Enable B (TGIEB)	0	Disable interrupt requests (TGIB) due to the TGFB bit (initial value)
		1	Enable interrupt requests (TGIB) due to the TGFB bit
0	TGR Interrupt Enable A (TGIEA)	0	Disable interrupt requests (TGIA) due to the TGFA bit (initial value)
		1	Enable interrupt requests (TGIA) due to the TGFA bit

MTU

Timer Status Register 1 (TSR1)	H'FFFF8285	8/16/32

Item	Bit							
	7	6	5	4	3	2	1	0
Bit name	TCFD	—	TCFU	TCFV	—	—	TGFB	TGFA
Initial value	1	1	0	0	0	0	0	0
R/W	R/W	R	R/(W)*	R/(W)*	R	R	R/(W)*	R/(W)*

Note: * Only 0 writes to clear the flags are possible.

Bit	Name	Value	Description
7	Count Direction Flag (TCFD)	0	TCNT counts down
		1	TCNT counts up (initial value)
5	Underflow Flag (TCFU)	0	Clear condition: With TCFU = 1, a 0 write to TCFU after reading it (initial value)
		1	Set condition: When the TCNT value underflows (H'0000 → H'FFFF)
4	Overflow Flag (TCFV)	0	Clear condition: With TCFV = 1, a 0 write to TCFV after reading it (initial value)
		1	Set condition: When the TCNT value overflows (H'FFFF → H'0000)
1	Input Capture/Output Compare Flag B (TGFB)	0	Clear condition: With TGFB = 1, a 0 write to TGFB following a read (initial value)
		1	Set conditions: • When TGRB is functioning as an output compare register (TCNT = TGRB) • When TGRB is functioning as input capture (the TCNT value is sent to TGRB by the input capture signal)
0	Input Capture/Output Compare Flag A (TGFA)	0	Clear condition: With TGFA = 1, a 0 write to TGFA following a read* (initial value)
		1	Set conditions: • When TGRA is functioning as an output compare register (TCNT = TGRA) • When TGRA is functioning as input capture (the TCNT value is sent to TGRA by the input capture signal)

Note: * Cleared by DMAC transfer due to TGFA.

MTU

Timer Counters 1 (TCNT1)	H'FFFF8286	16/32

Item	Bit															
	15	14	13	12	11	10	9	8	7	6	5	4	3	2	1	0
Bit name																
Initial value	0	0	0	0	0	0	0	0	0	0	0	0	0	0	0	0
R/W	R/W	R/W	R/W	R/W	R/W	R/W	R/W	R/W	R/W	R/W	R/W	R/W	R/W	R/W	R/W	R/W

Timer General Register 1 (TGR1)	H'FFFF8288 (1A) H'FFFF828A (1B)	16/32

Item	Bit															
	15	14	13	12	11	10	9	8	7	6	5	4	3	2	1	0
Bit name																
Initial value	1	1	1	1	1	1	1	1	1	1	1	1	1	1	1	1
R/W	R/W	R/W	R/W	R/W	R/W	R/W	R/W	R/W	R/W	R/W	R/W	R/W	R/W	R/W	R/W	R/W

MTU

Timer Control Register 2 (TCR2)	H'FFFF82A0	8/16/32

Item	Bit							
	7	6	5	4	3	2	1	0
Bit name	—	CCLR1	CCLR0	CKEG1	CKEG0	TPSC2	TPSC1	TPSC0
Initial value	0	0	0	0	0	0	0	0
R/W	R	R/W	R/W	R/W	R/W	R/W	R/W	R/W

Bit	Name	Value			Description
7 to 5	Counter Clear 2 to 0 (Reserved*[2], CCLR1, CCLR0)	0	0	0	TCNT clear disabled (initial value)
				1	TCNT is cleared by TGRA compare-match or input capture
			1	0	TCNT is cleared by TGRB compare-match or input capture
				1	Synchronizing clear: TCNT is cleared in synchronization with clear of other channel counters operating in sync*[1]
4, 3	Clock Edge 1, 0 (CKEG1 and CKEG0)*[5]	0	0		Count on rising edges (initial value)
			1		Count on falling edges
		1	X*[3]		Count on both rising and falling edges
2 to 0*[4]	Timer Prescaler 2 to 0 (TPSC2 to TPSC0)	0	0	0	Internal clock: count with ϕ/1 (initial value)
				1	Internal clock: count with ϕ/4
			1	0	Internal clock: count with ϕ/16
				1	Internal clock: count with ϕ/64
		1	0	0	External clock: count with the TCLKA pin input
				1	External clock: count with the TCLKB pin input
			1	0	External clock: count with the TCLKC pin input
				1	Internal clock: count with ϕ/1024

Notes:
1. Setting the SYNC bit of the TSYR to 1 sets the synchronization.
2. The bit 7 of channels 2 is reserved. It always reads 0, and cannot be modified.
3. X: 0 or 1, don't care.
4. These settings are ineffective when channel 2 is in phase counting mode.
5. Internal clock edge selection is effective when the input clock is ϕ/4 or slower. These settings are ignored when ϕ/1 is selected for the input clock.

MTU

Timer Mode Register 2 (TMDR2)	H'FFFF82A1	8/16/32

Item	Bit							
	7	6	5	4	3	2	1	0
Bit name	—	—	—	—	MD3	MD2	MD1	MD0
Initial value	1	1	0	0	0	0	0	0
R/W	R	R	R	R	R/W	R/W	R/W	R/W

Bit	Name	Value				Description
3 to 0	Modes 3 to 0 (MD3 to MD0)	0	0	0	0	Normal operation (initial value)
					1	Reserved (do not set)
				1	0	PWM mode 1
					1	PWM mode 2
			1	0	0	Phase counting mode 1
					1	Phase counting mode 2
				1	0	Phase counting mode 3
					1	Phase counting mode 4
		1	0	0	0	Reserved (do not set)
					1	Reserved (do not set)
				1	0	Reserved (do not set)
					1	Reserved (do not set)
			1	0	0	Reserved (do not set)
					1	Reserved (do not set)
				1	0	Reserved (do not set)
					1	Reserved (do not set)

MTU

Timer I/O Control Register 2 (TIOR2)	H'FFFF82A2	8/16/32

Item	Bit							
	7	6	5	4	3	2	1	0
Bit name	IOB3	IOB2	IOB1	IOB0	IOA3	IOA2	IOA1	IOA0
Initial value	0	0	0	0	0	0	0	0
R/W	R/W	R/W	R/W	R/W	R/W	R/W	R/W	R/W

Bit	Name	Value				Description		
7 to 4	I/O Control B3 to B0 (IOB3 to IOB0)	0	0	0	0	TGR2B is an output compare register	Output disabled	(initial value)
					1		Initial output is 0	Output 0 on compare-match
				1	0			Output 1 on compare-match
					1			Toggle output on compare-match
			1	0	0		Output disabled	
					1		Initial output is 1	Output 0 on compare-match
				1	0			Output 1 on compare-match
					1			Toggle output on compare-match
		1	0	0	0	TGR2B is an input capture register	Capture input source is the TIOC2B pin	Input capture on rising edge
					1			Input capture on falling edge
				1	0			Input capture on both edges
					1			
			1	0	0			Input capture on rising edge
					1			Input capture on falling edge
				1	0			Input capture on both edges
					1			

MTU

Bit	Name	Value				Description		
3 to 0	I/O Control A3 to A0 (IOA3 to IOA0)	0	0	0	0	TGR2A is an output compare register	Output disabled	(initial value)
					1		Initial output is 0	Output 0 on compare-match
				1	0			Output 1 on compare-match
					1			Toggle output on compare-match
			1	0	0		Output disabled	
					1		Initial output is 1	Output 0 on compare-match
				1	0			Output 1 on compare-match
					1			Toggle output on compare-match
		1	0	0	0	TGR2A is an input capture register	Capture input source is the TIOC2A pin	Input capture on rising edge
					1			Input capture on falling edge
				1	0			Input capture on both edges
					1			
			1	0	0			Input capture on rising edge
					1			Input capture on falling edge
				1	0			Input capture on both edges
					1			

MTU

Timer Interrupt Enable Register 2 (TIER2)	H'FFFF82A4	8/16/32

Item	Bit							
	7	6	5	4	3	2	1	0
Bit name	TTGE	—	TCIEU	TCIEV	—	—	TGIEB	TGIEA
Initial value	0	1	0	0	0	0	0	0
R/W	R/W	R	R/W	R/W	R	R	R/W	R/W

Bit	Name	Value	Description
7	A/D Conversion Start Request Enable (TTGE)	0	Disable A/D conversion start requests (initial value)
		1	Enable A/D conversion start request generation
5	Underflow Interrupt Enable (TCIEU)	0	Disable UDF interrupt requests (TCIU) (initial value)
		1	Enable UDF interrupt requests (TCIU)
4	Overflow Interrupt Enable (TCIEV)	0	Disable TCFV interrupt requests (TCIV) (initial value)
		1	Enable TCFV interrupt requests (TCIV)
1	TGR Interrupt Enable B (TGIEB)	0	Disable interrupt requests (TGIB) due to the TGFB bit (initial value)
		1	Enable interrupt requests (TGIB) due to the TGFB bit
0	TGR Interrupt Enable A (TGIEA)	0	Disable interrupt requests (TGIA) due to the TGFA bit (initial value)
		1	Enable interrupt requests (TGIA) due to the TGFA bit

MTU

Timer Status Register 2 (TSR2)	H'FFFF82A5	8/16/32

Item	Bit							
	7	6	5	4	3	2	1	0
Bit name	TCFD	—	TCFU	TCFV	—	—	TGFB	TGFA
Initial value	1	1	0	0	0	0	0	0
R/W	R	R	R/(W)*	R/(W)*	R	R	R/(W)*	R/(W)*

Note: * Only 0 writes to clear the flags are possible.

Bit	Name	Value	Description
7	Count Direction Flag (TCFD)	0	TCNT counts down
		1	TCNT counts up (initial value)
5	Underflow Flag (TCFU)	0	Clear condition: With TCFU = 1, a 0 write to TCFU after reading it (initial value)
		1	Set condition: When the TCNT value underflows (H'0000 → H'FFFF)
4	Overflow Flag (TCFV)	0	Clear condition: With TCFV = 1, a 0 write to TCFV after reading it (initial value)
		1	Set condition: When the TCNT value overflows (H'FFFF → H'0000)
1	Input Capture/Output Compare Flag B (TGFB)	0	Clear condition: With TGFB = 1, a 0 write to TGFB following a read (initial value)
		1	Set conditions: • When TGRB is functioning as an output compare register (TCNT = TGRB) • When TGRB is functioning as input capture (the TCNT value is sent to TGRB by the input capture signal)
0	Input Capture/Output Compare Flag A (TGFA)	0	Clear condition: With TGFA = 1, a 0 write to TGFA following a read* (initial value)
		1	Set conditions: • When TGRA is functioning as an output compare register (TCNT = TGRA) • When TGRA is functioning as input capture (the TCNT value is sent to TGRA by the input capture signal)

Note: * Cleared by DMAC transfer due to TGFA.

MTU

Timer Counters 2 (TCNT2)	H'FFFF82A6	16/32

Item	Bit															
	15	14	13	12	11	10	9	8	7	6	5	4	3	2	1	0
Bit name																
Initial value	0	0	0	0	0	0	0	0	0	0	0	0	0	0	0	0
R/W	R/W	R/W	R/W	R/W	R/W	R/W	R/W	R/W	R/W	R/W	R/W	R/W	R/W	R/W	R/W	R/W

Timer General Register 2 (TGR2)	H'FFFF82A8 (2A) H'FFFF82AA (2B)	16/32

Item	Bit															
	15	14	13	12	11	10	9	8	7	6	5	4	3	2	1	0
Bit name																
Initial value	1	1	1	1	1	1	1	1	1	1	1	1	1	1	1	1
R/W	R/W	R/W	R/W	R/W	R/W	R/W	R/W	R/W	R/W	R/W	R/W	R/W	R/W	R/W	R/W	R/W

Timer Start Register (TSTR)	H'FFFF8240	8/16/32

Item	Bit							
	7	6	5	4	3	2	1	0
Bit name	—	—	—	—	—	CST2	CST1	CST0
Initial value	0	0	0	0	0	0	0	0
R/W	R	R	R	R	R	R/W	R/W	R/W

Bit	Name	Value	Description
2 to 0	Counter Start 2 to 0 (CST2 to CST0)	0	TCNTn count is halted (initial value)
		1	TCNTn count

Note: n = 2 to 0

If 0 is written to the CST bit during operation with the TIOC pin in output status, the counter stops, but the TIOC pin output compare output level is maintained. If a write is done to the TIOR register while the CST bit is a 0, the pin output level is updated to the established initial output value.

MTU

Timer Synchro Register (TSYR)	H'FFFF8241	8/16/32

Item	Bit							
	7	6	5	4	3	2	1	0
Bit name	—	—	—	—	—	SYNC2	SYNC1	SYNC0
Initial value	0	0	0	0	0	0	0	0
R/W	R	R	R	R	R	R/W	R/W	R/W

Bit	Name	Value	Description
2 to 0	Timer Synchronization 2 to 0 (SYNC2 to SYNC0)	0	Timer counter (TCNTn) independent operation (TCNTn preset/clear unrelated to other channels) (initial value)
		1	Timer counter synchronous operation*1 TCNTn synchronous preset/ synchronous clear*2 possible

Notes: n = 2 to 0

1. Minimum of two channel SYNC bits must be set to 1 for synchronous operation.
2. TCNT counter clear sources (CCLR2 to CCLR0 bits of the TCR register) must be set in addition to the SYNC bit in order to have clear synchronization.

WDT

Timer Counter (TCNT)	H'FFFF8610 (Write)*[1] H'FFFF8611 (Read)*[2]	—

Item	Bit							
	7	6	5	4	3	2	1	0
Bit name								
Initial value	0	0	0	0	0	0	0	0
R/W	R/W	R/W	R/W	R/W	R/W	R/W	R/W	R/W

Notes: 1. Write by word transfer. It cannot be written in byte or longword.
2. Read by byte transfer. It cannot be read in word or longword.

Timer Control/Status Register (TCSR)	H'FFFF8610	—

Item	Bit							
	7	6	5	4	3	2	1	0
Bit name	OVF	WT/$\overline{\text{IT}}$	TME	—	—	CKS2	CKS1	CKS0
Initial value	0	0	0	0	0	0	0	0
R/W	R/(W)*	R/W	R/W	R	R	R/W	R/W	R/W

Note: * The TCSR differs from other registers in that it is more difficult to write to. See section 11.2.4, Register Access, for details.

Bit	Name	Value	Description
7	Overflow Flag (OVF)	0	No overflow of TCNT in interval timer mode (initial value) Cleared by reading OVF, then writing 0 in OVF
		1	TCNT overflow in the interval timer mode
6	Timer Mode Select (WT/$\overline{\text{IT}}$)	0	Interval timer mode: interval timer interrupt request to the CPU when TCNT overflows (initial value)
		1	Watchdog timer mode: $\overline{\text{WDTOVF}}$ signal output externally when TCNT overflows*[1]
5	Timer Enable (TME)	0	Timer disabled: TCNT is initialized to H'00 and count-up stops (initial value)
		1	Timer enabled: TCNT starts counting. A $\overline{\text{WDTOVF}}$ signal or interrupt is generated when TCNT overflows.

WDT

Bit	Name	Value			Description	
					Clock Source	Overflow Interval*2 (ϕ = 28.7 MHz)
2 to 0	Clock Select 2 to 0 (CKS2 to CKS0)	0	0	0	ϕ/2 (Initial value)	17.9 μs
				1	ϕ/64	573.4 μs
			1	0	ϕ/128	1.1 ms
				1	ϕ/256	2.3 ms
		1	0	0	ϕ/512	4.6 ms
				1	ϕ/1024	9.2 ms
			1	0	ϕ/4096	36.7 ms
				1	ϕ/8192	73.4 ms

Notes: 1. Section 11.2.3, Reset Control/Status Register (RSTCSR), describes in detail what happens when TCNT overflows in the watchdog timer mode.

2. The overflow interval listed is the time from when the TCNT begins counting at H'00 until an overflow occurs.

Reset Control/Status Register (RSTCSR)	H'FFFF8612 (Write) H'FFFF8613 (Read)	—

Item	Bit							
	7	6	5	4	3	2	1	0
Bit name	WOVF	RSTE	—	—	—	—	—	—
Initial value	0	0	0	1	1	1	1	1
R/W	R/(W)*	R/W	R	R	R	R	R	R

Note: * Only 0 can be written in bit 7 to clear the flag.

Bit	Name	Value	Description
7	Watchdog Timer Overflow Flag (WOVF)	0	No TCNT overflow in watchdog timer mode (initial value) Cleared when software reads WOVF, then writes 0 in WOVF
		1	Set by TCNT overflow in watchdog timer mode
6	Reset Enable (RSTE)	0	Not reset when TCNT overflows (initial value) LSI not reset internally, but TCNT and TCSR reset within WDT.
		1	Reset when TCNT overflows

SCI

Receive Data Register (RDR)	H'FFFF81A5 (Channel 0) H'FFFF81B5 (Channel 1)	8/16

Item	Bit							
	7	6	5	4	3	2	1	0
Bit name								
Initial value	0	0	0	0	0	0	0	0
R/W	R	R	R	R	R	R	R	R

Transmit Data Register (TDR)	H'FFFF81A3 (Channel 0) H'FFFF81B3 (Channel 1)	8/16

Item	Bit							
	7	6	5	4	3	2	1	0
Bit name								
Initial value	1	1	1	1	1	1	1	1
R/W	R/W	R/W	R/W	R/W	R/W	R/W	R/W	R/W

SCI

Serial Mode Register (SMR)	H'FFFF81A0 (Channel 0) H'FFFF81B0 (Channel 1)	8/16

Item	Bit							
	7	6	5	4	3	2	1	0
Bit name	C/$\overline{A}$	CHR	PE	O/$\overline{E}$	STOP	MP	CKS1	CKS0
Initial value	0	0	0	0	0	0	0	0
R/W	R/W	R/W	R/W	R/W	R/W	R/W	R/W	R/W

Bit	Name	Value		Description	
7	Communication Mode (C/$\overline{A}$)	0		Asynchronous mode	(initial value)
		1		Clocked synchronous mode	
6	Character Length (CHR)	0		Eight-bit data	(initial value)
		1		Seven-bit data*[1]	
5	Parity Enable (PE)	0		Parity bit not added or checked	(initial value)
		1		Parity bit added and checked*[2]	
4	Parity Mode (O/$\overline{E}$)	0		Even parity*[3]	(initial value)
		1		Odd parity*[4]	
3	Stop Bit Length (STOP)	0		One stop bit*[5]	(initial value)
		1		Two stop bits*[6]	
2	Multiprocessor Mode (MP)	0		Multiprocessor function disabled	(initial value)
		1		Multiprocessor format selected	
1, 0	Clock Select 1 and 0 (CKS1 and CKS0)	0	0	ϕ	(initial value)
			1	$\phi/4$	
		1	0	$\phi/16$	
			1	$\phi/64$	

Notes:
1. When 7-bit data is selected, the MSB (bit 7) of the transmit data register is not transmitted.
2. When PE is set to 1, an even or odd parity bit is added to transmit data, depending on the parity mode (O/$\overline{E}$) setting. Receive data parity is checked according to the even/odd (O/$\overline{E}$) mode setting.
3. If even parity is selected, the parity bit is added to transmit data to make an even number of 1s in the transmitted character and parity bit combined. Receive data is checked to see if it has an even number of 1s in the received character and parity bit combined.
4. If odd parity is selected, the parity bit is added to transmit data to make an odd number of 1s in the transmitted character and parity bit combined. Receive data is checked to see if it has an odd number of 1s in the received character and parity bit combined.
5. In transmitting, a single bit of 1 is added at the end of each transmitted character.
6. In transmitting, two bits of 1 are added at the end of each transmitted character.

SCI

Serial Control Register (SCR)	H'FFFF81A2 (Channel 0) H'FFFF81B2 (Channel 1)	8/16

Item	Bit							
	7	6	5	4	3	2	1	0
Bit name	TIE	RIE	TE	RE	MPIE	TEIE	CKE1	CKE0
Initial value	0	0	0	0	0	0	0	0
R/W	R/W	R/W	R/W	R/W	R/W	R/W	R/W	R/W

Bit	Name	Value	Description
7	Transmit Interrupt Enable (TIE)	0	Transmit-data-empty interrupt request (TXI) is disabled *1 (initial value)
		1	Transmit-data-empty interrupt request (TXI) is enabled
6	Receive Interrupt Enable (RIE)	0	Receive-data-full interrupt (RXI) and receive-error interrupt (ERI) requests are disabled*2 (initial value)
		1	Receive-data-full interrupt (RXI) and receive-error interrupt (ERI) requests are enabled
5	Transmit Enable (TE)	0	Transmitter disabled*3 (initial value)
		1	Transmitter enabled*4
4	Receive Enable (RE)	0	Receiver disabled*5 (initial value)
		1	Receiver enabled*6
3	Multiprocessor Interrupt Enable (MPIE)	0	Multiprocessor interrupts are disabled (initial value) (normal receive operation) MPIE is cleared when the MPIE bit is cleared to 0, or the multiprocessor bit (MPB) is set to 1 in receive data.
		1	Multiprocessor interrupts are enabled*7 Receive-data-full interrupt requests (RXI), receive-error interrupt requests (ERI), and setting of the RDRF, FER, and ORER status flags in the serial status register (SSR) are disabled until data with the multiprocessor bit set to 1 is received.
2	Transmit-End Interrupt Enable (TEIE)	0	Transmit-end interrupt (TEI) requests are disabled*8 (initial value)
		1	Transmit-end interrupt (TEI) requests are enabled*8

SCI

Bit	Name	Value		Description	
				Asynchronous mode	Clock synchronous mode
1, 0	Clock Enable 1 and 0 (CKE1 and CKE0)*9	0	0	Internal clock, SCK pin used for input pin (input signal is ignored) or output pin (output level is undefined)*10	Internal clock, SCK pin used for synchronous clock output*10
		0	1	Internal clock, SCK pin used for clock output*11	Internal clock, SCK pin used for synchronous clock output
		1	0	External clock, SCK pin used for clock input*12	External clock, SCK pin used for synchronous clock input
		1	1	External clock, SCK pin used for clock input*12	External clock, SCK pin used for synchronous clock input

Notes:
1. The TXI interrupt request can be cleared by reading TDRE after it has been set to 1, then clearing TDRE to 0, or by clearing TIE to 0.
2. RXI and ERI interrupt requests can be cleared by reading the RDRF flag or error flag (FER, PER, or ORER) after it has been set to 1, then clearing the flag to 0, or by clearing RIE to 0.
3. The transmit data register empty bit (TDRE) in the serial status register (SSR) is locked at 1.
4. Serial transmission starts when the transmit data register empty (TDRE) bit in the serial status register (SSR) is cleared to 0 after writing of transmit data into the TDR. Select the transmit format in the SMR before setting TE to 1.
5. Clearing RE to 0 does not affect the receive flags (RDRF, FER, PER, ORER). These flags retain their previous values.
6. Serial reception starts when a start bit is detected in the asynchronous mode, or synchronous clock input is detected in the clock synchronous mode. Select the receive format in the SMR before setting RE to 1.
7. The SCI does not transfer receive data from the RSR to the RDR, does not detect receive errors, and does not set the RDRF, FER, and ORER flags in the serial status register (SSR). When it receives data that includes MPB = 1, MPB is set to 1, and the SCI automatically clears MPIE to 0, generates RXI and ERI interrupts (if the TIE and RIE bits in the SCR are set to 1), and allows the FER and ORER bits to be set.
8. The TEI request can be cleared by reading the TDRE bit in the serial status register (SSR) after it has been set to 1, then clearing TDRE to 0 and clearing the transmit end (TEND) bit to 0; or by clearing the TEIE bit to 0.
9. The SCK pin is multiplexed with other functions. Use the pin function controller (PFC) to select the SCK function for this pin, as well as the I/O direction.
10. Initial value.
11. The output clock frequency is the same as the bit rate.
12. The input clock frequency is 16 times the bit rate.

SCI

Serial Status Register (SSR)	H'FFFF81A4 (Channel 0) H'FFFF81B4 (Channel 1)	8/16

Item	Bit							
	7	6	5	4	3	2	1	0
Bit name	TDRE	RDRF	ORER	FER	PER	TEND	MPB	MPBT
Initial value	1	0	0	0	0	1	0	0
R/W	R/(W)*	R/(W)*	R/(W)*	R/(W)*	R/(W)*	R	R	R/W

Note: * The only value that can be written is a 0 to clear the flag.

Bit	Name	Value	Description
7	Transmit Data Register Empty (TDRE)	0	TDR contains valid transmit data Clearing conditions: • When 0 is written to TDRE after reading TDRE = 1 • When DMAC writes data in TDR
		1	TDR does not contain valid transmit data (initial value) Setting conditions: • Power-on reset or standby mode • When the TE bit in SCR is 0 • When data is transferred from TDR to TSR and data can be written to TDR
6	Receive Data Register Full (RDRF)	0	RDR does not contain valid received data (initial value) Clearing conditions: • Power-on reset or standby mode • When 0 is written to RDRF after reading RDRF = 1 • When DMAC reads data from RDR
		1	RDR contains valid received data Setting condition: When serial reception ends normally and receive data is transferred from RSR to RDR

SCI

Bit	Name	Value	Description
5	Overrun Error (ORER)	0	Receiving is in progress or has ended normally*[1] (initial value) Clearing conditions: • Power-on reset or standby mode • When 0 is written to ORER after reading ORER = 1
		1	A receive overrun error occurred Setting condition: When the next serial reception is completed while RDRF = 1*[2]
4	Framing Error (FER)	0	Receiving is in progress or has ended normally*[3] (initial value) Clearing conditions: • Power-on reset or standby mode • When 0 is written to FER after reading FER = 1
		1	A receive framing error occurred*[4] Setting condition: When at the end of an SCI receive operation the final stop bit of the receive data is checked and its value*[4] is 0
3	Parity Error (PER)	0	Receiving is in progress or has ended normally*[5] (initial value) Clearing conditions: • Power-on reset or standby mode • When 0 is written to PER after reading PER = 1
		1	A receive parity error occurred*[6] Setting condition: PER is set to 1 if the number of 1s in receive data, including the parity bit, does not match the even or odd parity setting of the parity mode bit ($O/\overline{E}$) in the serial mode register (SMR)

SCI

Bit	Name	Value	Description
2	Transmit End (TEND)	0	Transmission is in progress Clearing conditions: • When 0 is written to TDRE after reading TDRE = 1 • When DMAC writes data in TDR
		1	End of transmission (initial value) Clearing conditions: • Power-on reset or standby mode • When the TE bit in SCR is 0 • When TDRE = at transmission of the last bit of a 1-byte serial transmit character
1	Multiprocessor Bit (MPB)	0	Multiprocessor bit value in receive data is 0*7 (initial value)
		1	Multiprocessor bit value in receive data is 1
0	Multiprocessor Bit Transfer (MPBT)	0	Multiprocessor bit value in transmit data is 0 (initial value)
		1	Multiprocessor bit value in transmit data is 1

Notes:
1. The ORER flag is not affected and retains their previous values when the RE bit in SCR is cleared to 0.
2. RDR continues to hold the data received before the overrun error, so subsequent receive data is lost. Serial receiving cannot continue while ORER is set to 1. In the clock synchronous mode, serial transmitting is disabled.
3. The FER flag is not affected and retains their previous values when the RE bit in SCR is cleared to 0.
4. When the stop bit length is two bits, only the first bit is checked to see if it is a 1. The second stop bit is not checked. When a framing error occurs, the SCI transfers the receive data into the RDR but does not set RDRF. Serial receiving cannot continue while FER is set to 1. In the clock synchronous mode, serial transmitting is also disabled. In addition, serial transmission cannot continue in clock synchronous mode.
5. The PER flag is not affected and retains their previous values when the RE bit in SCR is cleared to 0.
6. When a parity error occurs, the SCI transfers the receive data into the RDR but does not set RDRF. Serial receiving cannot continue while PER is set to 1. In the clock synchronous mode, serial transmitting is also disabled. In addition, serial transmission cannot continue in clock synchronous mode.
7. If RE is cleared to 0 when a multiprocessor format is selected, the MPB retains its previous value.

SCI

Bit Rate Register (BRR)	H'FFFF81A1 (Write) H'FFFF81B1 (Read)	8/16

Item	Bit							
	7	6	5	4	3	2	1	0
Bit name								
Initial value	1	1	1	1	1	1	1	1
R/W	R/W	R/W	R/W	R/W	R/W	R/W	R/W	R/W

A/D (SH7014)

A/D Data Registers A to H (ADDRA to ADDRH)	H'FFFF83F0 H'FFFF83F2 H'FFFF83F4 H'FFFF83F6 H'FFFF83F8 H'FFFF83FA H'FFFF83FC H'FFFF83FE	8/16

Item	Bit															
	15	14	13	12	11	10	9	8	7	6	5	4	3	2	1	0
Bit name	—	—	—	—	—	—	AD9	AD8	AD7	AD6	AD5	AD4	AD3	AD2	AD1	AD0
Initial value	0	0	0	0	0	0	0	0	0	0	0	0	0	0	0	0
R/W	R	R	R	R	R	R	R	R	R	R	R	R	R	R	R	R

A/D Control/Status Register (ADCSR)	H'FFFF83E0	8/16

Item	Bit							
	7	6	5	4	3	2	1	0
Bit name	ADF	ADIE	ADST	CKS	GRP	CH2	CH1	CH0
Initial value	0	0	0	0	0	0	0	0
R/W	R/(W)*	R/W	R/W	R/W	R/W	R/W	R/W	R/W

Note: * Only 0 can be written to bit 7 to clear the flag.

Bit	Name	Value	Description
7	A/D End Flag (ADF)	0	Clear conditions: (initial value) • With ADF = 1, by reading the ADF flag then writing 0 in ADF • When the DMAC is activated by an ADI interrupt
		1	Set conditions: • Single mode: When A/D conversion ends after conversion for all designated channels* • Scan mode: After one round of A/D conversion for all specified channels
6	A/D Interrupt Enable (ADIE)	0	Disables interrupt requests (ADI) after A/D conversion ends (initial value)
		1	Enables interrupt requests (ADI) after A/D conversion ends

A/D (SH7014)

Bit	Name	Value			Description	
5	A/D Start (ADST)	0			A/D conversion halted (initial value)	
		1			• Single mode: Start A/D conversion. Automatically cleared to 0 after conversion for the designated channel ends. • Scan mode: Start A/D conversion. Continuous conversion until 0 cleared by software.	
4	Clock Select (CKS)	0			Conversion time = 40 states (high speed A/D converter standard clock = $\phi/2$) (initial value)	
		1			Conversion time = 80 states (when $\phi/4$ is selected)	
3	Group Mode (GRP)	0			Select mode (initial value)	
		1			Group mode	
2 to 0	Channel Select 2 to 0 (CH2 to CH0)				Select mode (GRP = 0)	Group mode (GRP = 1)
		0	0	0	AN0 (Initial value)	AN0
				1	AN1	AN0, AN1
			1	0	AN2	AN0 to AN2
				1	AN3	AN0 to AN3
		1	0	0	AN4	AN0 to AN4
				1	AN5	AN0 to AN5
			1	0	AN6	AN0 to AN6
				1	AN7	AN0 to AN7

Note: * During buffer operation, this is not set until operation of the specified buffer has ended.

A/D (SH7014)

A/D Control Register (ADCR)	H'FFFF83E1	8/16

Item	Bit							
	7	6	5	4	3	2	1	0
Bit name	—	PWR	TRGS1	TRGS0	SCAN	DSMP	BUFE1	BUFE0
Initial value	0	0	0	0	0	0	0	0
R/W	R	R/W	R/W	R/W	R/W	R/W	R/W	R/W

Bit	Name	Value		Description
6	Power (PWR)	0		Low power conversion mode (initial value)
		1		High speed start mode
5, 4	Timer Trigger Select 1, 0 (TRGS1, TRGS0)	0	0	Enable A/D conversion start by software (initial value)
			1	Enables A/D conversion start by MTU conversion start trigger
		1	0	Reserved
			1	
3	Scan Mode (SCAN)	0		Single mode (initial value)
		1		Scan mode
2	Simultaneous Sampling (DSMP)	0		Normal sampling operation (initial value)
		1		Simultaneous sampling operation
1, 0	Buffer Enable 1, 0 (BUFE1, BUFE0)	0	0	Normal operation (initial value)
			1	ADDRA and ADDRB buffer operation: conversion result → ADDRA → ADDRB
		1	0	ADDRA and ADDRC, also ADDRB and ADDRD buffer operation: conversion result 1 → ADDRA → ADDRC, conversion result 2 → ADDRB → ADDRD (ADDRC and ADDRD are buffer registers)
			1	ADDRA to ADDRD buffer operation: conversion result → ADDRA → ADDRB → ADDRC → ADDRD (ADDRB to ADDRD are buffer registers)

A/D (SH7016, SH7017)

A/D Data Register A to D (ADDRA to ADDRD)	H'FFFF8420 H'FFFF8422 H'FFFF8424 H'FFFF8426	8/16

Item	Bit															
	15	14	13	12	11	10	9	8	7	6	5	4	3	2	1	0
Bit name	AD9	AD8	AD7	AD6	AD5	AD4	AD3	AD2	AD1	AD0	—	—	—	—	—	—
Initial value	0	0	0	0	0	0	0	0	0	0	0	0	0	0	0	0
R/W	R	R	R	R	R	R	R	R	R	R	R	R	R	R	R	R

A/D Control/Status Register (ADCSR)	H'FFFF8428	8/16

Item	Bit							
	7	6	5	4	3	2	1	0
Bit name	ADF	ADIE	ADST	SCAN	CKS	CH2	CH1	CH0
Initial value	0	0	0	0	0	0	0	0
R/W	R/(W)*	R/W	R/W	R/W	R/W	R/W	R/W	R/W

Note: * Only 0 can be written to bit 7 to clear the flag.

Bit	Name	Value	Description
7	A/D End Flag (ADF)	0	Clear conditions: (initial value) 1. Writing 0 to ADF after reading ADF with ADF = 1 2. When registers of the mid-speed converter are accessed after the DMAC is activated by ADI interrupt
		1	Set conditions: 1. Single mode: When A/D conversion is complete 2. Scan mode: When A/D conversion of all designated channels are complete
6	A/D Interrupt Enable (ADIE)	0	Disables interrupt request (ADI) due to completion of A/D conversion (initial value)
		1	Enables interrupt request (ADI) due to completion of A/D conversion

A/D (SH7016, SH7017)

Bit	Name	Value	Description
5	A/D Start (ADST)	0	A/D conversion halted (initial value)
		1	1. Single mode: Starts A/D conversion. Automatically clears to 0 when conversion of the designated channel is complete 2. Scan mode: Starts A/D conversion. Continuous conversion until cleared to 0 by the software
4	Scan Mode (SCAN)	0	Single mode (initial value)
		1	Scan mode
3	Clock Select (CKS)	0	Conversion time = 266 states (max) (initial value)
		1	Conversion time = 134 states (max)

2 to 0	Channel select 2 to 0 (CH2 to CH0)				Single Mode	Scan Mode
		0	0	0	AN0 (Initial value)	AN0
				1	AN1	AN0, AN1
			1	0	AN2	AN0 to AN2
				1	AN3	AN0 to AN3
		1	0	0	AN4	AN4
				1	AN5	AN4, AN5
			1	0	AN6	AN4 to AN6
				1	AN7	AN4 to AN7

A/D Control Register (ADCR)	H'FFFF8429	8/16

Item	Bit							
	7	6	5	4	3	2	1	0
Bit name	TRGE	—	—	—	—	—	—	—
Initial value	0	1	1	1	1	1	1	1
R/W	R/W	R	R	R	R	R	R	R

Bit	Name	Value	Description
7	Trigger Enable (TRGE)	0	Disables A/D conversion start of MTU trigger (initial value)
		1	Starts A/D conversion on MTU trigger

CMT

Compare Match Timer Start Register (CMSTR)	H'FFFF83D0	8/16/32

Item	Bit							
	15	14	13	12	11	10	9	8
Bit name	—	—	—	—	—	—	—	—
Initial value	0	0	0	0	0	0	0	0
R/W	R	R	R	R	R	R	R	R
Item	7	6	5	4	3	2	1	0
Bit name	—	—	—	—	—	—	STR1	STR0
Initial value	0	0	0	0	0	0	0	0
R/W	R	R	R	R	R	R	R/W	R/W

Bit	Name	Value	Description
1	Count Start 1 (STR1)	0	CMCNT1 count operation halted (initial value)
		1	CMCNT1 count operation
0	Count Start 0 (STR0)	0	CMCNT0 count operation halted (initial value)
		1	CMCNT0 count operation

Compare Match Timer Control/Status Register (CMCSR)	H'FFFF83D2 (Channel 0) H'FFFF83D8 (Channel 1)	8/16/32

Item	Bit							
	15	14	13	12	11	10	9	8
Bit name	—	—	—	—	—	—	—	—
Initial value	0	0	0	0	0	0	0	0
R/W	R	R	R	R	R	R	R	R
Item	7	6	5	4	3	2	1	0
Bit name	CMF	CMIE	—	—	—	—	CKS1	CKS0
Initial value	0	0	0	0	0	0	0	0
R/W	R/(W)*	R/W	R	R	R	R	R/W	R/W

Note: * The only value that can be written is a 0 to clear the flag.

Bit	Name	Value	Description
7	Compare Match Flag (CMF)	0	CMCNT and CMCOR values have not matched Clear condition: Write a 0 to CMF after reading a 1 from it (initial value)
		1	CMCNT and CMCOR values have matched
6	Compare Match Interrupt Enable (CMIE)	0	Compare match interrupts (CMI) disabled (initial value)
		1	Compare match interrupts (CMI) enabled

CMT

Bit	Name	Value		Description
1, 0	Clock Select 1, 0 (CKS1, CKS0)	0	0	ϕ/8 (initial value)
		0	1	ϕ/32
		1	0	ϕ/128
		1	1	ϕ/512

Compare Match Timer Counter (CMCNT)	H'FFFF83D4 (Channel 0) H'FFFF83DA (Channel 1)	8/16/32

Item	Bit															
	15	14	13	12	11	10	9	8	7	6	5	4	3	2	1	0
Bit name																
Initial value	0	0	0	0	0	0	0	0	0	0	0	0	0	0	0	0
R/W	R/W	R/W	R/W	R/W	R/W	R/W	R/W	R/W	R/W	R/W	R/W	R/W	R/W	R/W	R/W	R/W

Compare Match Timer Constant Register (CMCOR)	H'FFFF83D6 (Channel 0) H'FFFF83DC (Channel 1)	8/16/32

Item	Bit															
	15	14	13	12	11	10	9	8	7	6	5	4	3	2	1	0
Bit name																
Initial value	1	1	1	1	1	1	1	1	1	1	1	1	1	1	1	1
R/W	R/W	R/W	R/W	R/W	R/W	R/W	R/W	R/W	R/W	R/W	R/W	R/W	R/W	R/W	R/W	R/W

PFC

Port A I/O Register L (PAIORL)	H'FFFF8386 H'FFFF8387	8/16/32

Item	Bit							
	15	14	13	12	11	10	9	8
Bit name	PA15IOR	PA14IOR*	PA13IOR*	PA12IOR*	PA11IOR*	PA10IOR*	PA9IOR	PA8IOR
Initial value	0	0	0	0	0	0	0	0
R/W	R/W	R/W	R/W	R/W	R/W	R/W	R/W	R/W
Item	7	6	5	4	3	2	1	0
Bit name	PA7IOR	PA6IOR	PA5IOR	PA4IOR	PA3IOR	PA2IOR	PA1IOR	PA0IOR
Initial value	0	0	0	0	0	0	0	0
R/W	R/W	R/W	R/W	R/W	R/W	R/W	R/W	R/W

Note: * Reserved bit on the SH7014.

Port A Control Register L1 (PACRL1)	H'FFFF838C H'FFFF838D	8/16/32

Item	Bit							
	15	14	13	12	11	10	9	8
Bit name	—	PA15MD	—	PA15MD*2	—	PA15MD*2	—	PA15MD*2
Initial value	0	0(1)*1	0	0	0	0	0	0
R/W	R	R/W	R	R/W	R	R/W	R	R/W
Item	7	6	5	4	3	2	1	0
Bit name	—	PA15MD*2	—	PA15MD*2	PA9MD1	PA9MD0	PA8MD1	PA8MD0
Initial value	0	0	0	0	0	0	0	0
R/W	R	R/W	R	R/W	R/W	R/W	R/W	R/W

Notes: 1. Bit 14 is initialized to 1 in extended mode.
2. Reserved bit on the SH7014.

PFC

Bit	Name	Value		Description
14	PA15 Mode (PA15MD)	0		General input/output (PA15) (single chip mode initial value)
		1		Clock output (CK) (extended mode initial value)
12	PA14 Mode (PA14MD)	0		General input/output (PA14) ($\overline{RD}$ in on-chip ROM invalid mode) (initial value)
		1		Read output ($\overline{RD}$) (PA14 in single chip mode)
10	PA13 Mode (PA13MD)	0		General input/output (PA13) ($\overline{WRH}$ in on-chip ROM invalid mode) (initial value)
		1		Most significant side write output ($\overline{WRH}$) (PA13 in single chip mode)
8	PA12 Mode (PA12MD)	0		General input/output (PA12) ($\overline{WRL}$ in on-chip ROM invalid mode) (initial value)
		1		Least significant side write output ($\overline{WRL}$) (PA12 in single chip mode)
6	PA11 Mode (PA11MD)	0		General input/output (PA11) ($\overline{CS1}$ in on-chip ROM invalid mode) (initial value)
		1		Chip select output ($\overline{CS1}$) (PA11 in single chip mode)
4	PA10 Mode (PA10MD)	0		General input/output (PA10) ($\overline{CS0}$ in on-chip ROM invalid mode) (initial value)
		1		Chip select output ($\overline{CS0}$) (PA10 in single chip mode)
3, 2	PA9 Mode 1, 0 (PA9MD1 and PA9MD0)	0	0	General input/output (PA9) (initial value)
			1	MTU timer clock input (TCLKD)
		1	0	Interrupt request input ($\overline{IRQ3}$)
			1	Reserved
1, 0	PA8 Mode 1, 0 (PA8MD1 and PA8MD0)	0	0	General input/output (PA8) (initial value)
			1	MTU timer clock input (TCLKC)
		1	0	Interrupt request input ($\overline{IRQ2}$)
			1	Reserved

PFC

Port A Control Register L2 (PACRL2)	H'FFFF838E H'FFFF838F	8/16/32

Item	Bit							
	15	14	13	12	11	10	9	8
Bit name	PA7MD1	PA7MD0	PA6MD1	PA6MD0	PA5MD1	PA5MD0	—	PA4MD
Initial value	0	0	0	0	0	0	0	0
R/W	R/W	R/W	R/W	R/W	R/W	R/W	R	R/W
Item	7	6	5	4	3	2	1	0
Bit name	—	PA3MD	PA2MD1	PA2MD0	—	PA1MD	—	PA0MD
Initial value	0	0	0	0	0	0	0	0
R/W	R	R/W	R/W	R/W	R	R/W	R	R/W

Bit	Name	Value		Description
15, 14	PA7 Mode 1, 0 (PA7MD1 and PA7MD0)	0	0	General input/output (PA7) (initial value)
			1	MTU timer clock input (TCLKB)
		1	0	Chip select output ($\overline{CS3}$) (PA7 in single-chip mode)
			1	Reserved
13, 12	PA6 Mode 1, 0 (PA6MD1 and PA6MD0)	0	0	General input/output (PA6) (initial value)
			1	MTU timer clock input (TCLKA)
		1	0	Chip select output ($\overline{CS2}$) (PA6 in single-chip mode)
			1	Reserved
11, 10	PA5 Mode 1, 0 (PA5MD1 and PA5MD0)	0	0	General input/output (PA5) (initial value)
			1	Serial clock input/output (SCK1)
		1	0	DMA transfer request received input ($\overline{DREQ1}$) (PA5 in single-chip mode)
			1	Interrupt request input ($\overline{IRQ1}$)
8	PA4 Mode (PA4MD)	0		General input/output (PA4) (initial value)
		1		Transmit data output (TxD1)
6	PA3 Mode (PA3MD)	0		General input/output (PA3) (initial value)
		1		Receive data input (RxD1)
5, 4	PA2 Mode 1, 0 (PA2MD1 and PA2MD0)	0	0	General input/output (PA2) (initial value)
			1	Serial clock input/output (SCK0)
		1	0	DMA transfer request received input ($\overline{DREQ0}$) (PA2 in single-chip mode)
			1	Interrupt request input ($\overline{IRQ0}$)

PFC

Bit	Name	Value	Description
2	PA1 Mode (PA1MD)	0	General input/output (PA1) (initial value)
		1	Transmit data output (TxD0)
0	PA0 Mode (PA0MD)	0	General input/output (PA0) (initial value)
		1	Receive data input (RxD0)

Port B I/O Register (PBIOR)	H'FFFF8394 H'FFFF8395	8/16/32

Item	Bit							
	15	14	13	12	11	10	9	8
Bit name	—	—	—	—	—	—	PB9IOR	PB8IOR
Initial value	0	0	0	0	0	0	0	0
R/W	R	R	R	R	R	R	R/W	R/W
Item	7	6	5	4	3	2	1	0
Bit name	PB7IOR	PB6IOR	PB5IOR	PB4IOR	PB3IOR	PB2IOR	PB1IOR*	PB0IOR*
Initial value	0	0	0	0	0	0	0	0
R/W	R/W	R/W	R/W	R/W	R/W	R/W	R/W	R/W

Note: * Reserved bit on the SH7014.

PFC

Port B Control Register 1 (PBCR1)	H'FFFF8398 H'FFFF8399	8/16/32

Item	Bit							
	15	14	13	12	11	10	9	8
Bit name	—	—	—	—	—	—	—	—
Initial value	0	0	0	0	0	0	0	0
R/W	R	R	R	R	R	R	R	R
Item	7	6	5	4	3	2	1	0
Bit name	—	—	—	—	PB9MD1	PB9MD0	PB8MD1	PB8MD0
Initial value	0	0	0	0	0	0	0	0
R/W	R	R	R	R	R/W	R/W	R/W	R/W

Bit	Name	Value		Description
3, 2	PB9 Mode 1, 0 (PB9MD1 and PB9MD0)	0	0	General input/output (PB9) (initial value)
			1	Interrupt request input ($\overline{\text{IRQ7}}$)
		1	0	Address output (A21) (PB9 in single-chip mode)
			1	Reserved
1, 0	PB8 Mode 1, 0 (PB8MD1 and PB8MD0)	0	0	General input/output (PB8) (initial value)
			1	Interrupt request input ($\overline{\text{IRQ6}}$)
		1	0	Address output (A20) (PB8 in single-chip mode)
			1	Wait state request input ($\overline{\text{WAIT}}$) (PB8 in single-chip mode)

PFC

Port B Control Register 2 (PBCR2)	H'FFFF839A H'FFFF839B	8/16/32

Item	Bit							
	15	14	13	12	11	10	9	8
Bit name	PB7MD1	PB7MD0	PB6MD1	PB6MD0	PB5MD1	PB5MD0	PB4MD1	PB4MD0
Initial value	0	0	0	0	0	0	0	0
R/W	R/W	R/W	R/W	R/W	R/W	R/W	R/W	R/W
Item	7	6	5	4	3	2	1	0
Bit name	PB3MD1	PB3MD0	PB2MD1	PB2MD0	—	PB1MD*	—	PB0MD*
Initial value	0	0	0	0	0	0	0	0
R/W	R/W	R/W	R/W	R/W	R	R/W	R	R/W

Note: * Reserved bit on the SH7014.

Bit	Name	Value		Description
15, 14	PB7 Mode 1, 0 (PB7MD1 and PB7MD0)	0	0	General input/output (PB7) (initial value)
			1	Reserved
		1	0	Address output (A19) (PB7 in single-chip mode)
			1	Reserved
13, 12	PB6 Mode 1, 0 (PB6MD1 and PB6MD0)	0	0	General input/output (PB6) (initial value)
			1	Reserved
		1	0	Address output (A18) (PB6 in single-chip mode)
			1	Reserved
11, 10	PB5 Mode 1, 0 (PB5MD1 and PB5MD0)	0	0	General input/output (PB5) (initial value)
			1	Interrupt request input ($\overline{IRQ3}$)
		1	0	Reserved
			1	Read/write output (RDWR)
9, 8	PB4 Mode 1, 0 (PB4MD1 and PB4MD0)	0	0	General input/output (PB4) (initial value)
			1	Interrupt request input ($\overline{IRQ2}$)
		1	0	Reserved
			1	Column address strobe ($\overline{CASH}$) (PB4 in single-chip mode)
7, 6	PB3 Mode 1, 0 (PB3MD1 and PB3MD0)	0	0	General input/output (PB3) (initial value)
			1	Interrupt request input ($\overline{IRQ1}$)
		1	0	Reserved
			1	Column address strobe ($\overline{CASL}$) (PB3 in single-chip mode)

PFC

Bit	Name	Value		Description
5, 4	PB2 Mode 1, 0 (PB2MD1 and PB2MD0)	0	0	General input/output (PB2) (initial value)
			1	Interrupt request input ($\overline{IRQ0}$)
		1	0	Reserved
			1	Row address strobe ($\overline{RAS}$) (PB2 in single-chip mode)
2	PB1 Mode (PB1MD)	0		General input/output (PB1) (A17 in on-chip ROM invalid mode) (initial value)
		1		Address output (A17) (PB1 in single chip mode)
0	PB0 Mode (PB0MD)	0		General input/output (PB0) (A16 in on-chip ROM invalid mode) (initial value)
		1		Address output (A16) (PB0 in single chip mode)

Port C I/O Register (PCIOR) (SH7016, SH7017)	H'FFFF8396 H'FFFF8397	8/16/32

Item	Bit							
	15	14	13	12	11	10	9	8
Bit name	PC15IOR	PC14IOR	PC13IOR	PC12IOR	PC11IOR	PC10IOR	PC9IOR	PC8IOR
Initial value	0	0	0	0	0	0	0	0
R/W	R/W	R/W	R/W	R/W	R/W	R/W	R/W	R/W
Item	7	6	5	4	3	2	1	0
Bit name	PC7IOR	PC6IOR	PC5IOR	PC4IOR	PC3IOR	PC2IOR	PC1IOR	PC0IOR
Initial value	0	0	0	0	0	0	0	0
R/W	R/W	R/W	R/W	R/W	R/W	R/W	R/W	R/W

PFC

Port C Control Register (PCCR) (SH7016, SH7017)	H'FFFF839C H'FFFF839D	8/16/32

Item	Bit							
	15	14	13	12	11	10	9	8
Bit name	PC15MD	PC14MD	PC13MD	PC12MD	PC11MD	PC10MD	PC9MD	PC8MD
Initial value	0	0	0	0	0	0	0	0
R/W	R/W	R/W	R/W	R/W	R/W	R/W	R/W	R/W
Item	7	6	5	4	3	2	1	0
Bit name	PC7MD	PC6MD	PC5MD	PC4MD	PC3MD	PC2MD	PC1MD	PC0MD
Initial value	0	0	0	0	0	0	0	0
R/W	R/W	R/W	R/W	R/W	R/W	R/W	R/W	R/W

Bit	Name	Value	Description
15	PC15 Mode (PC15MD)	0	General input/output (PC15) (A15 in on-chip ROM invalid mode) (initial value)
		1	Address output (A15) (PC15 in single chip mode)
14	PC14 Mode (PC14MD)	0	General input/output (PC14) (A14 in on-chip ROM invalid mode) (initial value)
		1	Address output (A14) (PC14 in single chip mode)
13	PC13 Mode (PC13MD)	0	General input/output (PC13) (A13 in on-chip ROM invalid mode) (initial value)
		1	Address output (A13) (PC13 in single chip mode)
12	PC12 Mode (PC12MD)	0	General input/output (PC12) (A12 in on-chip ROM invalid mode) (initial value)
		1	Address output (A12) (PC12 in single chip mode)
11	PC11 Mode (PC11MD)	0	General input/output (PC11) (A11 in on-chip ROM invalid mode) (initial value)
		1	Address output (A11) (PC11 in single chip mode)
10	PC10 Mode (PC10MD)	0	General input/output (PC10) A10 in on-chip ROM invalid mode) (initial value)
		1	Address output (A10) (PC10 in single chip mode)
9	PC9 Mode (PC9MD)	0	General input/output (PC9) (A9 in on-chip ROM invalid mode) (initial value)
		1	Address output (A9) (PC9 in single chip mode)

PFC

Bit	Name	Value	Description
8	PC8 Mode (PC8MD)	0	General input/output (PC8) A8 in on-chip ROM invalid mode) (initial value)
		1	Address output (A8) (PC8 in single chip mode)
7	PC7 Mode (PC7MD)	0	General input/output (PC7) (A7 in on-chip ROM invalid mode) (initial value)
		1	Address output (A7) (PC7 in single chip mode)
6	PC6 Mode (PC6MD)	0	General input/output (PC6) (A6 in on-chip ROM invalid mode) (initial value)
		1	Address output (A6) (PC6 in single chip mode)
5	PC5 Mode (PC5MD)	0	General input/output (P5) (A5 in on-chip ROM invalid mode) (initial value)
		1	Address output (A5) (PC5 in single chip mode)
4	PC4 Mode (PC4MD)	0	General input/output (PC4) (A4 in on-chip ROM invalid mode) (initial value)
		1	Address output (A4) (PC4 in single chip mode)
3	PC3 Mode (PC3MD)	0	General input/output (PC3) (A3 in on-chip ROM invalid mode) (initial value)
		1	Address output (A3) (PC3 in single chip mode)
2	PC2 Mode (PC2MD)	0	General input/output (PC2) (A2 in on-chip ROM invalid mode) (initial value)
		1	Address output (A2) (PC2 in single chip mode)
1	PC1 Mode (PC1MD)	0	General input/output (PC1) (A1 in on-chip ROM invalid mode) (initial value)
		1	Address output (A1) (PC1 in single chip mode)
0	PC0 Mode (PC0MD)	0	General input/output (PC0) (A0 in on-chip ROM invalid mode) (initial value)
		1	Address output (A0) (PC0 in single chip mode)

Port D I/O Register L (PDIORL) (SH7016, SH7017)	H'FFFF83A6 H'FFFF83A7	8/16/32

Item	Bit							
	15	14	13	12	11	10	9	8
Bit name	PD15IOR	PD14IOR	PD13IOR	PD12IOR	PD11IOR	PD10IOR	PD9IOR	PD8IOR
Initial value	0	0	0	0	0	0	0	0
R/W	R/W	R/W	R/W	R/W	R/W	R/W	R/W	R/W
Item	7	6	5	4	3	2	1	0
Bit name	PD7IOR	PD6IOR	PD5IOR	PD4IOR	PD3IOR	PD2IOR	PD1IOR	PD0IOR
Initial value	0	0	0	0	0	0	0	0
R/W	R/W	R/W	R/W	R/W	R/W	R/W	R/W	R/W

PFC

Port D Control Register L (PDCRL) (SH7016, SH7017)	H'FFFF83AC H'FFFF83AD	8/16/32

Item	Bit							
	15	14	13	12	11	10	9	8
Bit name	PD15MD	PD14MD	PD13MD	PD12MD	PD11MD	PD10MD	PD9MD	PD8MD
Initial value	0	0	0	0	0	0	0	0
R/W	R/W	R/W	R/W	R/W	R/W	R/W	R/W	R/W
Item	7	6	5	4	3	2	1	0
Bit name	PD7MD	PD6MD	PD5MD	PD4MD	PD3MD	PD2MD	PD1MD	PD0MD
Initial value	0	0	0	0	0	0	0	0
R/W	R/W	R/W	R/W	R/W	R/W	R/W	R/W	R/W

Bit	Name	Value	Description
15	PD15 Mode (PD15MD)	0	General input/output (PD15) (D15 in on-chip ROM invalid mode) (initial value)
		1	Data input/output (D15) (PD15 in single chip mode)
14	PD14 Mode (PD14MD)	0	General input/output (PD14) (D14 in on-chip ROM invalid mode) (initial value)
		1	Data input/output (D14) (PD14 in single chip mode)
13	PD13 Mode (PD13MD)	0	General input/output (PD13) (D13 in on-chip ROM invalid mode) (initial value)
		1	Data input/output (D13) (PD13 in single chip mode)
12	PD12 Mode (PD12MD)	0	General input/output (PD12) (D12 in on-chip ROM invalid mode) (initial value)
		1	Data input/output (D12) (PD12 in single chip mode)
11	PD11 Mode (PD11MD)	0	General input/output (PD11) (D11 in on-chip ROM invalid mode) (initial value)
		1	Data input/output (D11) (PD11 in single chip mode)
10	PD10 Mode (PD10MD)	0	General input/output (PD10) (D10 in on-chip ROM invalid mode) (initial value)
		1	Data input/output (D10) (PD10 in single chip mode)
9	PD9 Mode (PD9MD)	0	General input/output (PD9) (D9 in on-chip ROM invalid mode) (initial value)
		1	Data input/output (D9) (PD9 in single chip mode)

PFC

Bit	Name	Value	Description
8	PD8 Mode (PD8MD)	0	General input/output (PD8) (D8 in on-chip ROM invalid mode) (initial value)
		1	Data input/output (D8) (PD8 in single chip mode)
7	PD7 Mode (PD7MD)	0	General input/output (PD7) (D7 in on-chip ROM invalid mode) (initial value)
		1	Data input/output (D7) (PD7 in single chip mode)
6	PD6 Mode (PD6MD)	0	General input/output (PD6) (D6 in on-chip ROM invalid mode) (initial value)
		1	Data input/output (D6) (PD6 in single chip mode)
5	PD5 Mode (PD5MD)	0	General input/output (PD5) (D5 in on-chip ROM invalid mode) (initial value)
		1	Data input/output (D5) (PD5 in single chip mode)
4	PD4 Mode (PD4MD)	0	General input/output (PD4) (D4 in on-chip ROM invalid mode) (initial value)
		1	Data input/output (D4) (PD4 in single chip mode)
3	PD3 Mode (PD3MD)	0	General input/output (PD3) (D3 in on-chip ROM invalid mode) (initial value)
		1	Data input/output (D3) (PD3 in single chip mode)
2	PD2 Mode (PD2MD)	0	General input/output (PD2) (D2 in on-chip ROM invalid mode) (initial value)
		1	Data input/output (D2) (PD2 in single chip mode)
1	PD1 Mode (PD1MD)	0	General input/output (PD1) (D1 in on-chip ROM invalid mode) (initial value)
		1	Data input/output (D1) (PD1 in single chip mode)
0	PD0 Mode (PD0MD)	0	General input/output (PD0) (D0 in on-chip ROM invalid mode) (initial value)
		1	Data input/output (D0) (PD0 in single chip mode)

PFC

Port E I/O Register (PEIOR)	H'FFFF83B4 H'FFFF83B5	8/16/32

Item	Bit							
	15	14	13	12	11	10	9	8
Bit name	PE15IOR	PE14IOR	PE13IOR	PE12IOR	PE11IOR	PE10IOR	PE9IOR	PE8IOR
Initial value	0	0	0	0	0	0	0	0
R/W	R/W	R/W	R/W	R/W	R/W	R/W	R/W	R/W
Item	7	6	5	4	3	2	1	0
Bit name	PE7IOR	PE6IOR	PE5IOR	PE4IOR	PE3IOR	PE2IOR	PE1IOR	PE0IOR
Initial value	0	0	0	0	0	0	0	0
R/W	R/W	R/W	R/W	R/W	R/W	R/W	R/W	R/W

Port E Control Register 1 (PECR1)	H'FFFF83B8 H'FFFF83B9	8/16/32

Item	Bit							
	15	14	13	12	11	10	9	8
Bit name	PE15MD1	PE15MD0	PE14MD1	PE14MD0	—	—	—	—
Initial value	0	0	0	0	0	0	0	0
R/W	R/W	R/W	R/W	R/W	R	R	R	R
Item	7	6	5	4	3	2	1	0
Bit name	—	—	—	—	—	—	—	—
Initial value	0	0	0	0	0	0	0	0
R/W	R	R	R	R	R	R	R	R

Bit	Name	Value		Description
15, 14	PE15 Mode 1, 0 (PE15MD1 and PE15MD0)	0	0	Input/output (PE15) (initial value)
			1	Reserved
		1	0	DMA request received output (DACK1) (PE15 in single-chip mode)
			1	Reserved
13, 12	PE14 Mode 1, 0 (PE14MD1 and PE14MD0)	0	0	Input/output (PE14) (initial value)
			1	Reserved
		1	0	DMA request received output (DACK0) (PE14 in single-chip mode)
			1	Address hold output ($\overline{AH}$) (PE14 in single-chip mode)

PFC

Port E Control Register 2 (PECR2)	H'FFFF83BA H'FFFF83BB	8/16/32

Item	Bit							
	15	14	13	12	11	10	9	8
Bit name	—	PE7MD	—	PE6MD	—	PE5MD	—	PE4MD
Initial value	0	0	0	0	0	0	0	0
R/W	R	R/W	R	R/W	R	R/W	R	R/W
Item	7	6	5	4	3	2	1	0
Bit name	PE3MD1	PE3MD0	PE2MD1	PE2MD0	PE1MD1	PE1MD0	PE0MD1	PE0MD0
Initial value	0	0	0	0	0	0	0	0
R/W	R/W	R/W	R/W	R/W	R/W	R/W	R/W	R/W

Bit	Name	Value		Description
14	PE7 Mode (PE7MD)	0		General input/output (PE7) (initial value)
		1		MTU input capture input/output compare output (TIOC2B)
12	PE6 Mode (PE6MD)	0		General input/output (PE6) (initial value)
		1		MTU input capture input/output compare output (TIOC2A)
10	PE5 Mode (PE5MD)	0		General input/output (PE5) (initial value)
		1		MTU input capture input/output compare output (TIOC1B)
8	PE4 Mode (PE4MD)	0		General input/output (PE4) (initial value)
		1		MTU input capture input/output compare output (TIOC1A)
7, 6	PE3 Mode 1, 0 (PE3MD1 and PE3MD0)	0	0	General input/output (PE3) (initial value)
			1	MTU input capture input/output compare output (TIOC0D)
		1	0	$\overline{\text{DREQ1}}$ request received output (DRAK1) (PE3 in single-chip mode)
			1	Reserved
5, 4	PE2 Mode 1, 0 (PE2MD1 and PE2MD0)	0	0	General input/output (PE2) (initial value)
			1	MTU input capture input/output compare output (TIOC0C)
		1	0	$\overline{\text{DREQ1}}$ request received input (PE2 in single-chip mode)
			1	Reserved

PFC

Bit	Name	Value		Description
3, 2	PE1 Mode 1, 0 (PE1MD1 and PE1MD0)	0	0	General input/output (PE1) (initial value)
			1	MTU input capture input/output compare output (TIOC0B)
		1	0	$\overline{\text{DREQ0}}$ request received output (DRAK0) (PE1 in single-chip mode)
			1	Reserved
1, 0	PE0 Mode 1, 0 (PE0MD1 and PE0MD0)	0	0	General input/output (PE0) (initial value)
			1	MTU input capture input/output compare output (TIOC0A)
		1	0	$\overline{\text{DREQ0}}$ request received output (DRAK0) (PE0 in single-chip mode)
			1	Reserved

I/O

Port A Data Register L (PADRL)	H'FFFF8382 H'FFFF8383	8/16/32

Item	Bit							
	15	14	13	12	11	10	9	8
Bit name	PA15DR	PA14DR*	PA13DR*	PA12DR*	PA11DR*	PA10DR*	PA9DR	PA8DR
Initial value	0	0	0	0	0	0	0	0
R/W	R/W	R/W	R/W	R/W	R/W	R/W	R/W	R/W
Item	7	6	5	4	3	2	1	0
Bit name	PA7DR	PA6DR	PA5DR	PA4DR	PA3DR	PA2DR	PA1DR	PA0DR
Initial value	0	0	0	0	0	0	0	0
R/W	R/W	R/W	R/W	R/W	R/W	R/W	R/W	R/W

Note: * Reserved bit on the SH7014.

Port B Data Register (PBDR)	H'FFFF8390 H'FFFF8391	8/16/32

Item	Bit							
	15	14	13	12	11	10	9	8
Bit name	—	—	—	—	—	—	PB9DR	PB8DR
Initial value	0	0	0	0	0	0	0	0
R/W	R	R	R	R	R	R	R/W	R/W
Item	7	6	5	4	3	2	1	0
Bit name	PB7DR	PB6DR	PB5DR	PB4DR	PB3DR	DB2DR	PB1DR*	PB0DR*
Initial value	0	0	0	0	0	0	0	0
R/W	R/W	R/W	R/W	R/W	R/W	R/W	R/W	R/W

Note: * Reserved bit on the SH7014.

I/O

Port C Data Register (PCDR) (SH7016, SH7017)	H'FFFF8392 H'FFFF8393	8/16/32

Item	Bit							
	15	14	13	12	11	10	9	8
Bit name	PC15DR	PC14DR	PC13DR	PC12DR	PC11DR	PC10DR	PC9DR	PC8DR
Initial value	0	0	0	0	0	0	0	0
R/W	R/W	R/W	R/W	R/W	R/W	R/W	R/W	R/W
Item	7	6	5	4	3	2	1	0
Bit name	PC7DR	PC6DR	PC5DR	PC4DR	PC3DR	PC2DR	PC1DR	PC0DR
Initial value	0	0	0	0	0	0	0	0
R/W	R/W	R/W	R/W	R/W	R/W	R/W	R/W	R/W

Port D Data Register L (PDDRL) (SH7016, SH7017)	H'FFFF83A2 H'FFFF83A3	8/16/32

Item	Bit							
	15	14	13	12	11	10	9	8
Bit name	PD15DR	PD14DR	PD13DR	PD12DR	PD11DR	PD10DR	PD9DR	PD8DR
Initial value	0	0	0	0	0	0	0	0
R/W	R/W	R/W	R/W	R/W	R/W	R/W	R/W	R/W
Item	7	6	5	4	3	2	1	0
Bit name	PD7DR	PD6DR	PD5DR	PD4DR	PD3DR	PD2DR	PD1DR	PD0DR
Initial value	0	0	0	0	0	0	0	0
R/W	R/W	R/W	R/W	R/W	R/W	R/W	R/W	R/W

Port E Data Register (PEDR)	H'FFFF83B0 H'FFFF83B1	8/16/32

Item	Bit							
	15	14	13	12	11	10	9	8
Bit name	PE15DR	PE14DR	PE13DR	PE12DR	PE11DR	PE10DR	PE9DR	PE8DR
Initial value	0	0	0	0	0	0	0	0
R/W	R/W	R/W	R/W	R/W	R/W	R/W	R/W	R/W
Item	7	6	5	4	3	2	1	0
Bit name	PE7DR	PE6DR	PE5DR	PE4DR	PE3DR	PE2DR	PE1DR	PE0DR
Initial value	0	0	0	0	0	0	0	0
R/W	R/W	R/W	R/W	R/W	R/W	R/W	R/W	R/W

I/O

Port F Data Register (PFDR)	H'FFFF83B3	8

Item	Bit							
	7	6	5	4	3	2	1	0
Bit name	PF7DR	PF6DR	PF5DR	PF4DR	PF3DR	PF2DR	PF1DR	PF0DR
Initial value	*	*	*	*	*	*	*	*
R/W	R	R	R	R	R	R	R	R

Note: * Initial values are dependent on the status of the pins at the time of the reads.

FLASH

Flash Memory Control Register 1 (FLMCR1)	H'FFFF8580	8

Item	Bit							
	7	6	5	4	3	2	1	0
Bit name	FWE	SWE	ESU	PSU	EV	PV	E	P
Initial value	1/0	0	0	0	0	0	0	0
R/W	R	R/W	R/W	R/W	R/W	R/W	R/W	R/W

Bit	Name	Value	Description
7	Flash Write Enable Bit (FWE)	0	When a low level is input to the FWP pin (hardware-protected state)
		1	When a high level is input to the FWP pin
6	Software Write Enable Bit (SWE)	0	Writes disabled (initial value)
		1	Writes enabled Setting condition: When FWE = 1
5	Erase Setup Bit (ESU)	0	Erase setup cleared (initial value)
		1	Erase setup Setting condition: When FWE = 1 and SWE = 1
4	Program Setup Bit (PSU)	0	Program setup cleared (initial value)
		1	Program setup Setting condition: When FWE = 1 and SWE = 1
3	Erase-Verify (EV)	0	Erase-verify mode cleared (initial value)
		1	Transition to erase-verify mode
2	Program-Verify (PV)	0	Program-verify mode cleared (initial value)
		1	Transition to program-verify mode Setting condition: When FWE = 1 and SWE = 1
1	Erase (E)	0	Erase mode cleared (initial value)
		1	Transition to erase mode Setting condition: When FWE = 1, SWE = 1, and ESU = 1
0	Program (P)	0	Program mode cleared (initial value)
		1	Transition to program mode Setting condition: When FWE = 1, SWE = 1, and PSU = 1

FLASH

Flash Memory Control Register 2 (FLMCR2)	H'FFFF8581	8

Item	Bit							
	7	6	5	4	3	2	1	0
Bit name	FLER	—	—	—	—	—	—	—
Initial value	0	0	0	0	0	0	0	0
R/W	R	R	R	R	R	R	R	R

Bit	Name	Value	Description
7	Flash Memory Error (FLER)	0	Flash memory is operating normally. Flash memory program/erase protection (error protection) is disabled. Clearing condition: Power-on reset (initial value)
		1	An error has occurred during flash memory programming/erasing. Flash memory program/erase protection (error protection) is enabled. Setting condition: See section 18.8.3, Error Protection.

Erase Block Register 1 (EBR1)	H'FFFF8582	8

Item	Bit							
	7	6	5	4	3	2	1	0
Bit name	EB7	EB6	EB5	EB4	EB3	EB2	EB1	EB0
Initial value	0	0	0	0	0	0	0	0
R/W	R/W	R/W	R/W	R/W	R/W	R/W	R/W	R/W

Bit	Name	Value	Description
7 to 0	EB7 to EB0	0	Corresponding block is erase-protected (initial value)
		1	Corresponding block is not erase-protected

FLASH

RAM Emulation Register (RAMER)	H'FFFF8628	8/16/32

Item	Bit							
	15	14	13	12	11	10	9	8
Bit name	—	—	—	—	—	—	—	—
Initial value	0	0	0	0	0	0	0	0
R/W	R	R	R	R	R	R	R	R
Item	7	6	5	4	3	2	1	0
Bit name	—	—	—	—	—	RAMS	RAM1	RAM0
Initial value	0	0	0	0	0	0	0	0
R/W	R	R	R	R	R	R/W	R/W	R/W

Bit	Name	Value	Description
2	RAM Select (RAMS)	0	Emulation not selected Program/erase-protection of all flash memory blocks is disabled (initial value)
		1	Emulation selected Program/erase-protection of all flash memory blocks is enabled

Bit2 RAMS	Bit1 RAM1	Bit0 RAM0	Address	Block Name
0	*	*	H'FFF800 to H'FFFBFF	RAM area 1 kB
1	0	0	H'01F000 to H'01F3FF	EB4 (1 kB)
1	0	1	H'01F400 to H'01F7FF	EB5 (1 kB)
1	1	0	H'01F800 to H'01FBFF	EB6 (1 kB)
1	1	1	H'01FC00 to H'01FFFF	EB7 (1 kB)

Legend:

*: Don't care

Power-Down State

Standby Control Register (SBYCR)	H'FFFF8614	8/16/32

Item	Bit							
	7	6	5	4	3	2	1	0
Bit name	SBY	HIZ	—	—	—	—	—	—
Initial value	0	0	0	1	1	1	1	1
R/W	R/W	R/W	R	R	R	R	R	R

Bit	Name	Value	Description
7	Standby (SBY)	0	Executing SLEEP instruction puts the LSI into sleep mode (initial value)
		1	Executing SLEEP instruction puts the LSI into standby mode
6	Port High Impedance (HIZ)	0	Holds pin status while in standby mode (initial value)
		1	Keeps pin at high impedance while in standby mode

Appendix B I/O Port Block Diagrams

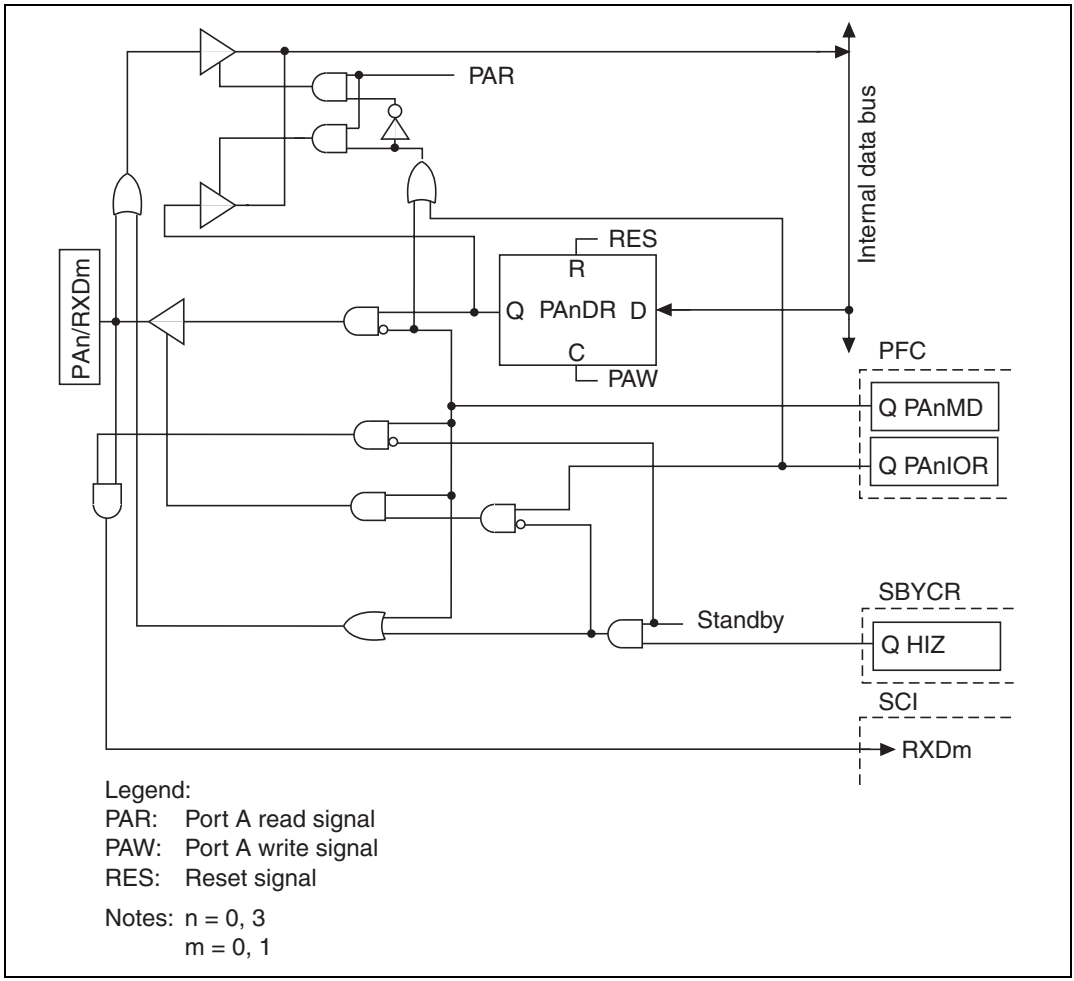

Figure B.1 PAn/RXm Block Diagram

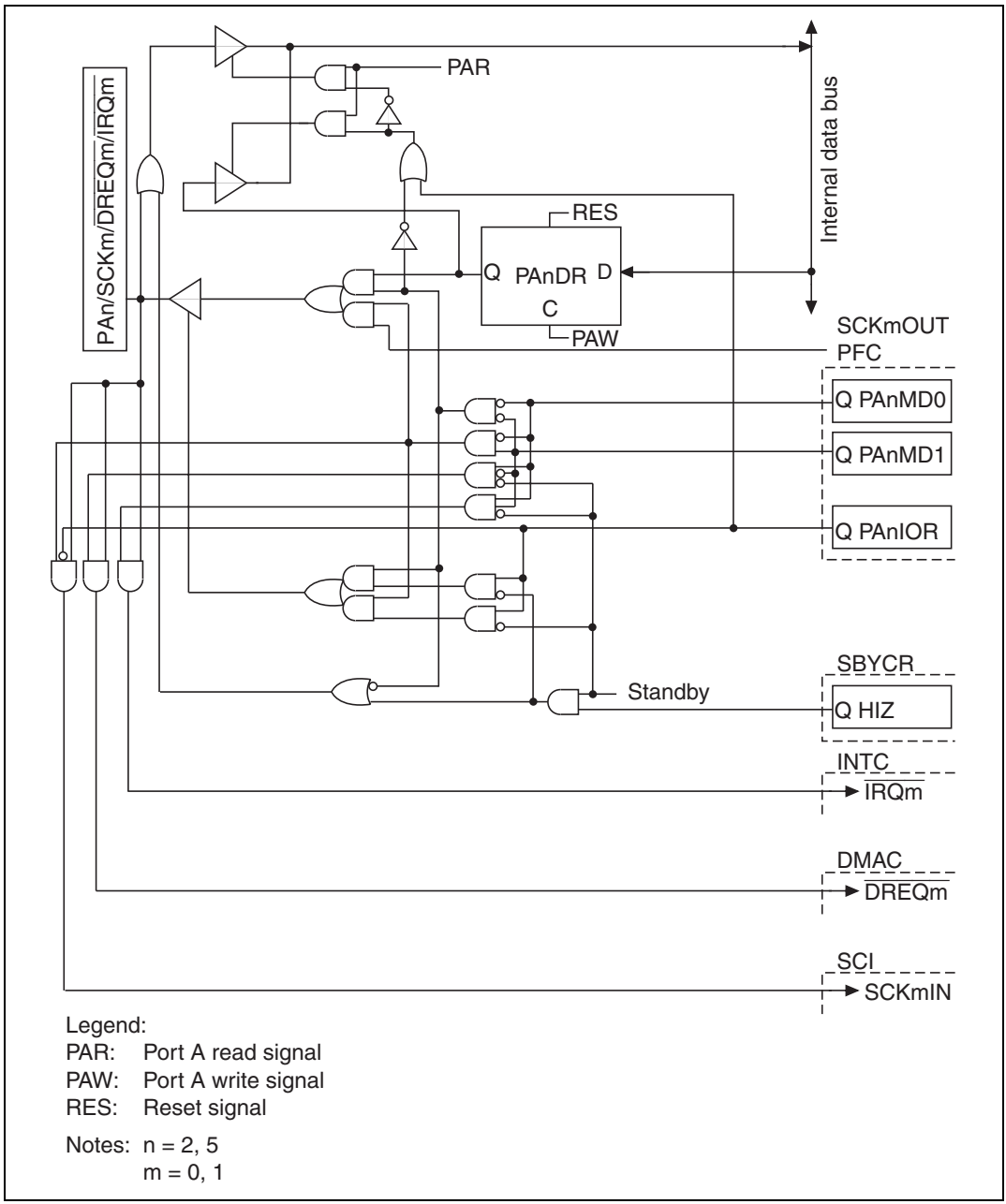

Figure B.2 PAn/SCKm/$\overline{\text{DREQm}}$/$\overline{\text{IRQm}}$ Block Diagram

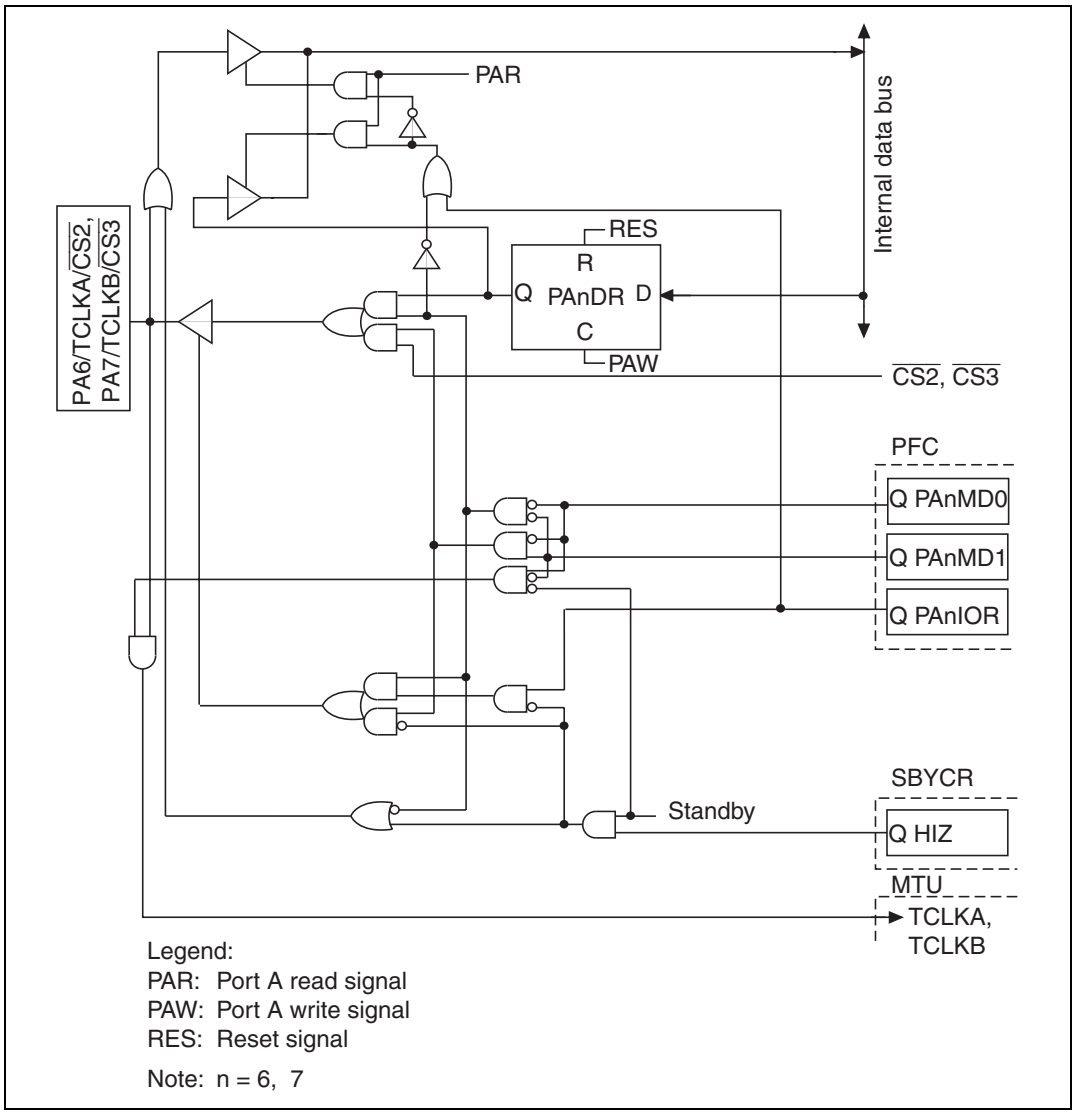

Figure B.3 PA6/TCLKA/$\overline{\text{CS2}}$, PA7/TCLKB/$\overline{\text{CS3}}$ (SH7014, Mask) Block Diagram

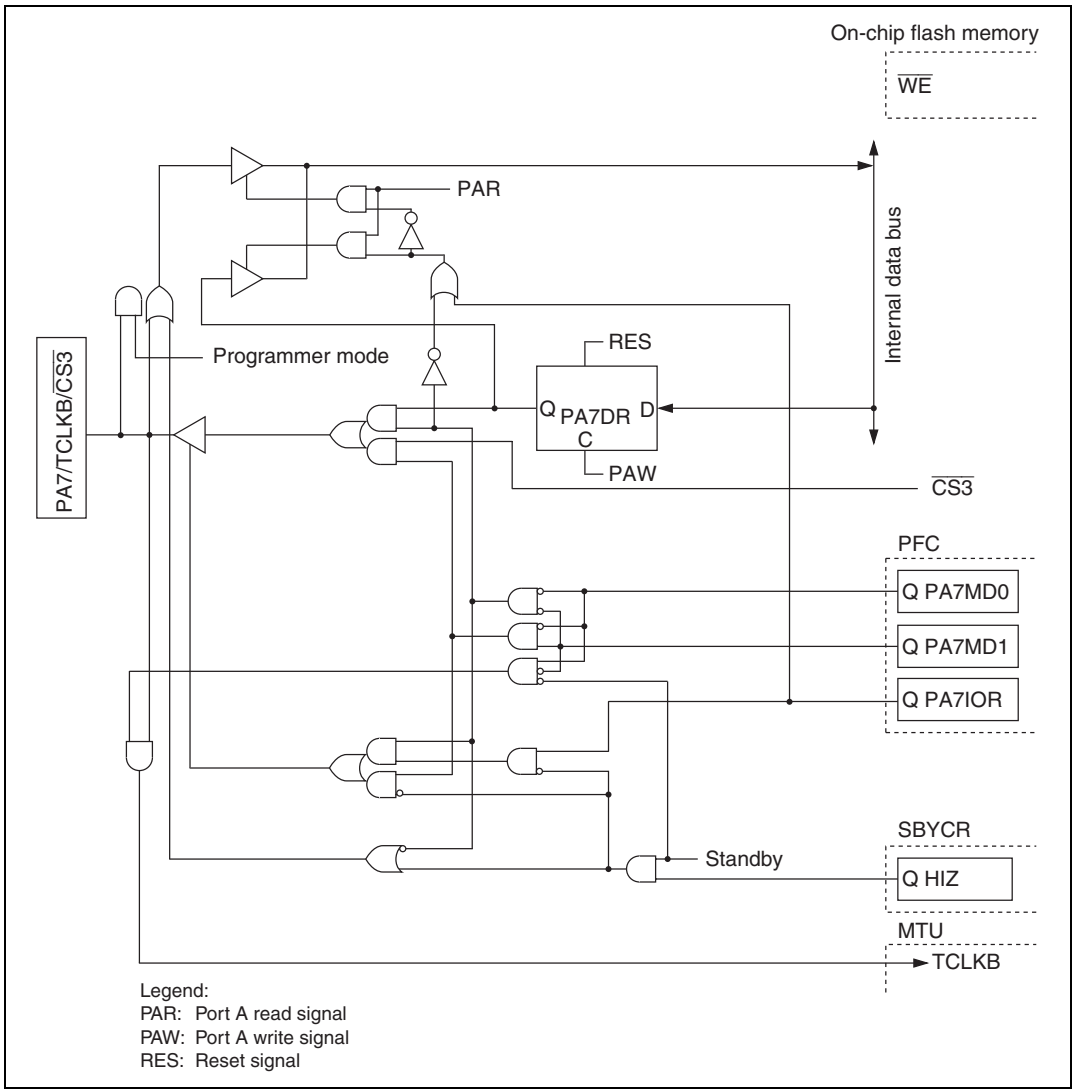

Figure B.4 PA7/TCLKB/$\overline{\text{CS3}}$ Block Diagram (F-ZTAT Version)

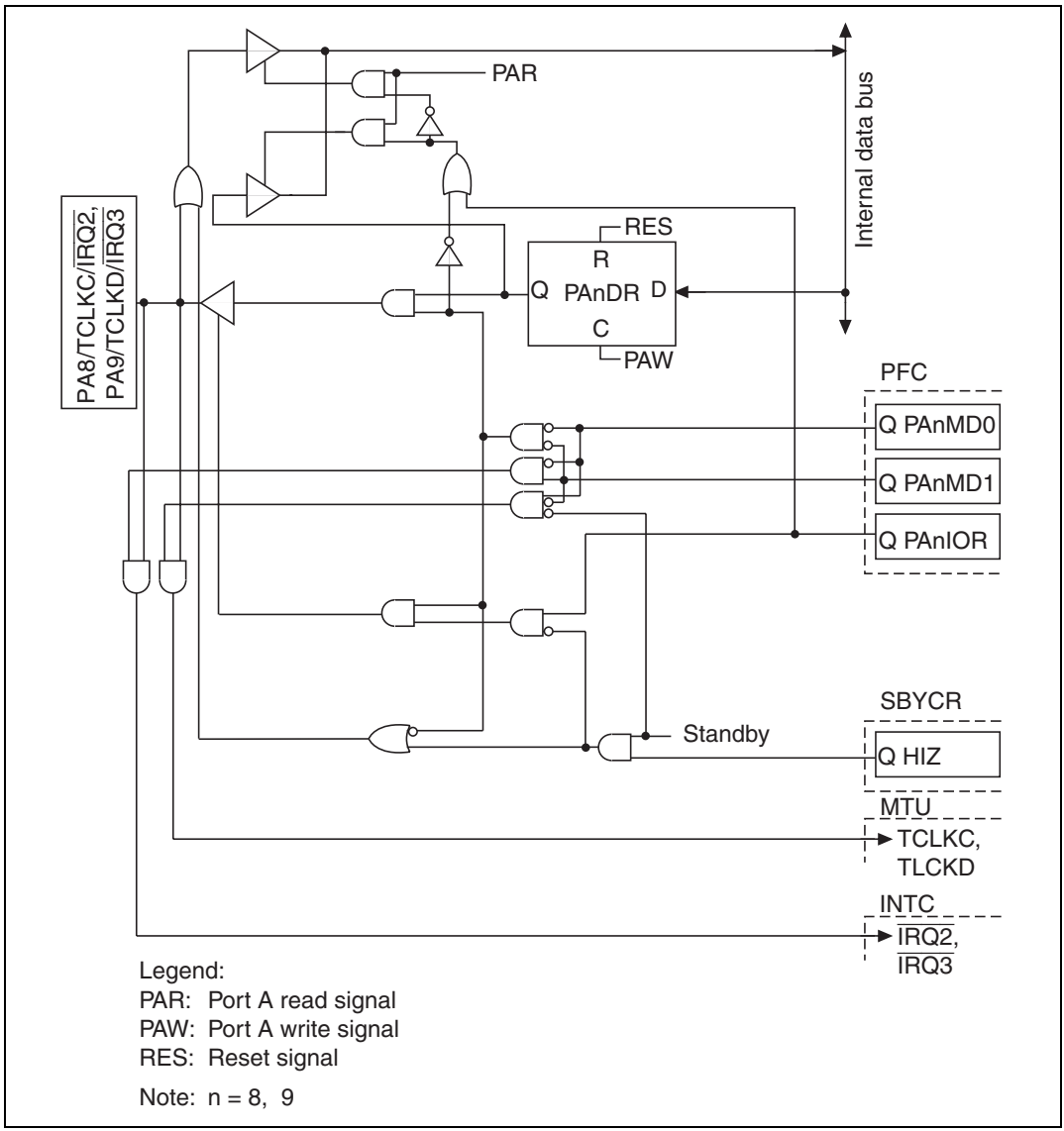

Figure B.5 PAn/TCLKm/$\overline{\text{IRQx}}$ Block Diagram (SH7014, Mask)

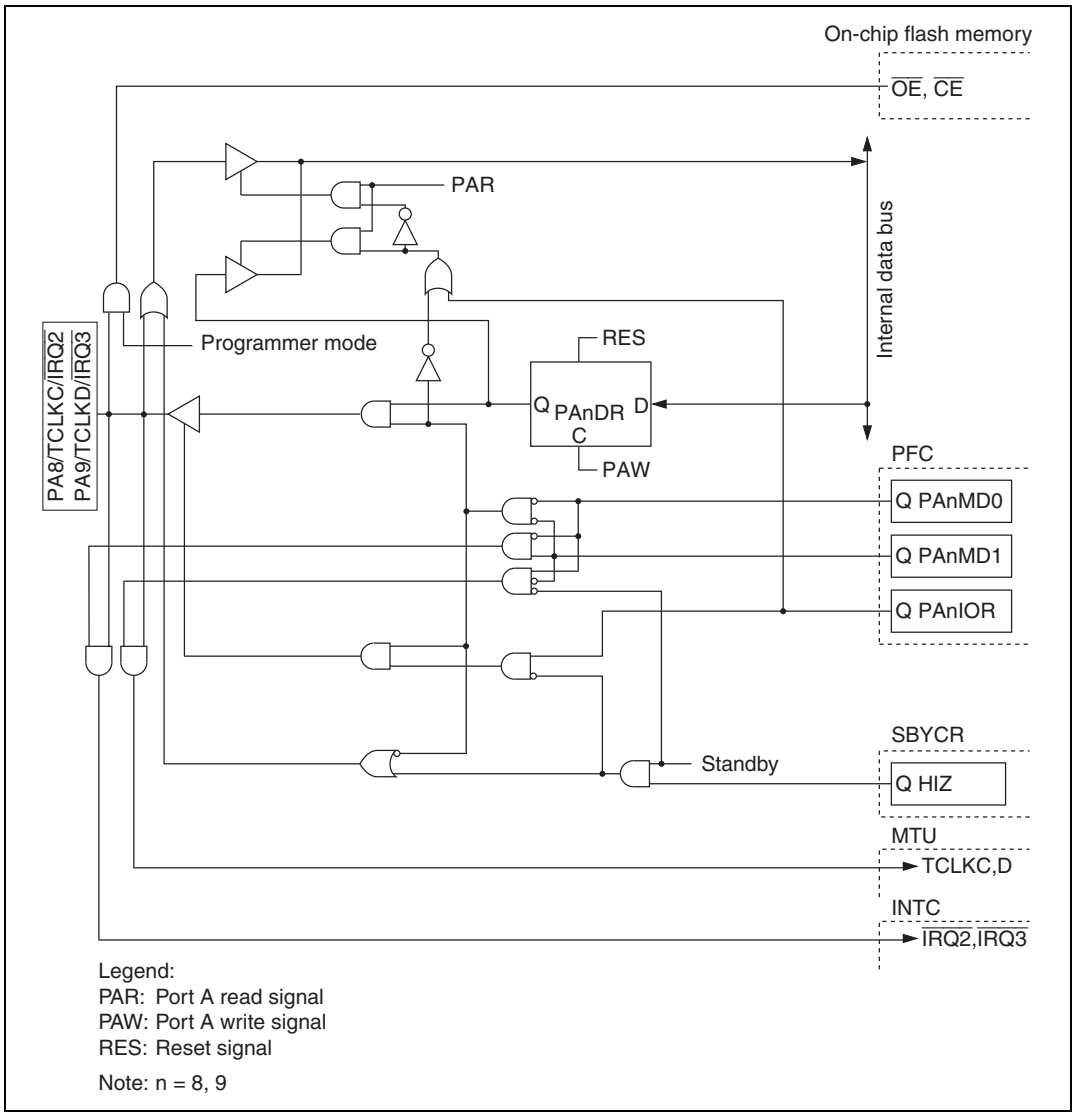

Figure B.6 PAn/TCLKm/$\overline{\text{IRQx}}$ Block Diagram (F-ZTAT Version)

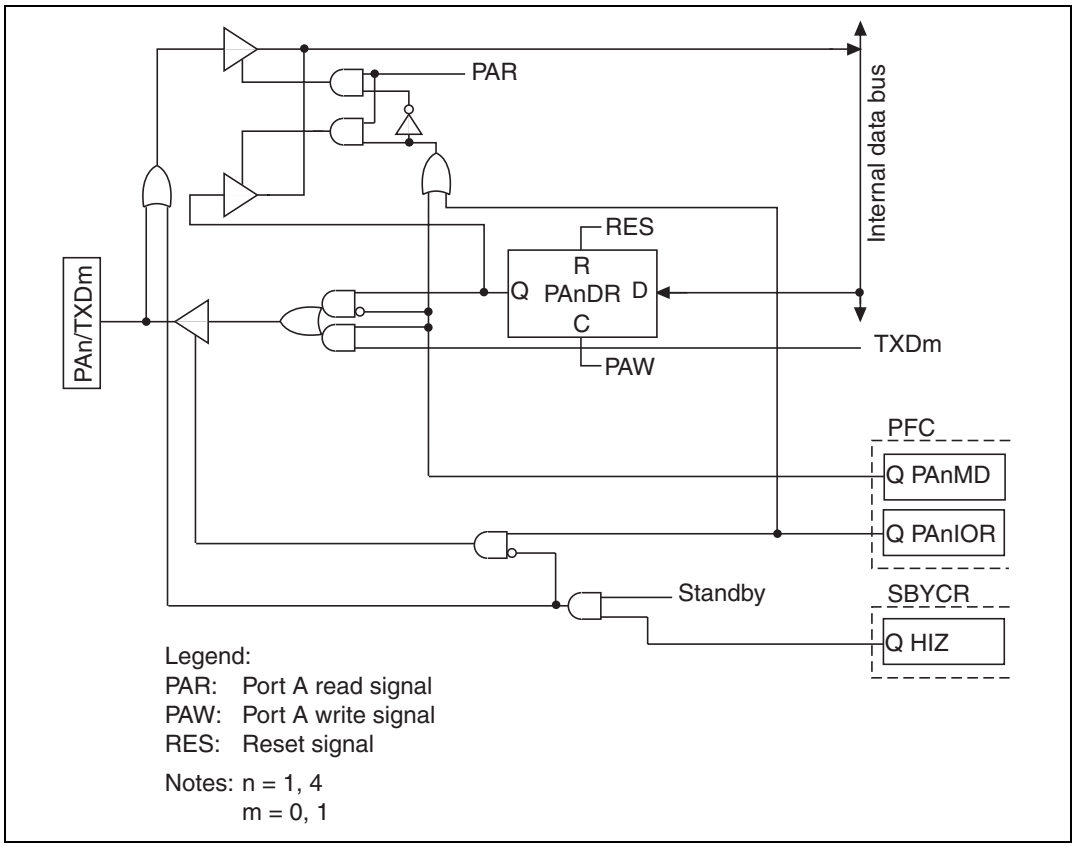

Figure B.7 PAn/TXDm Block Diagram

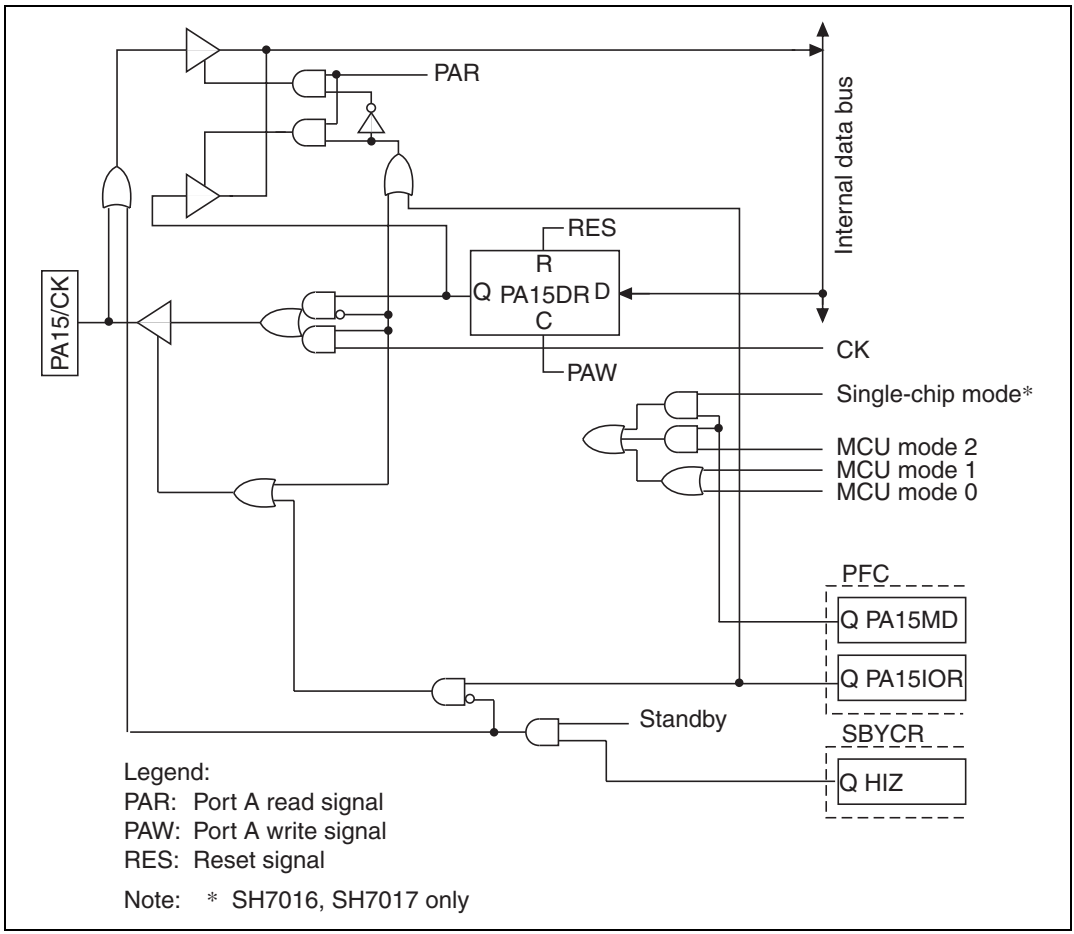

Figure B.8 PA15/CK Block Diagram

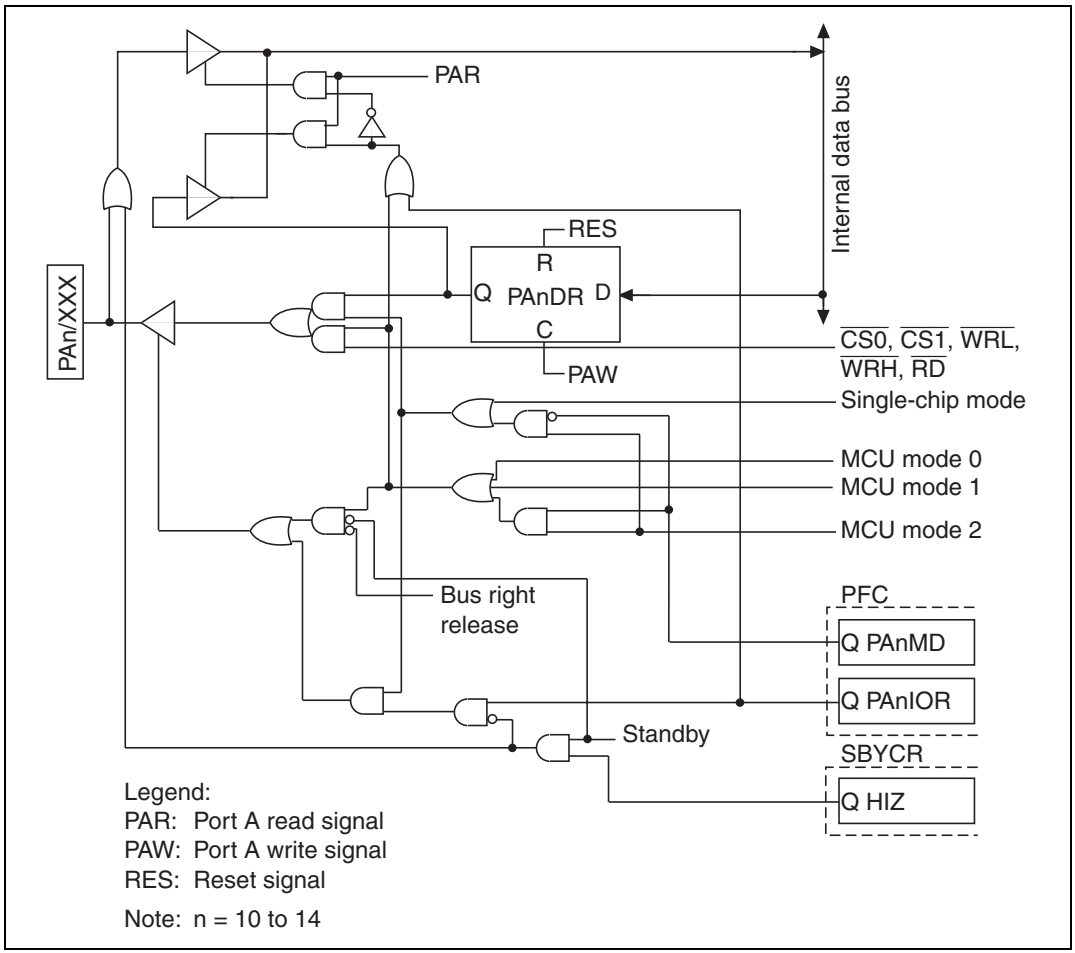

Figure B.9 PAn/XXX Block Diagram (SH7016, SH7017)

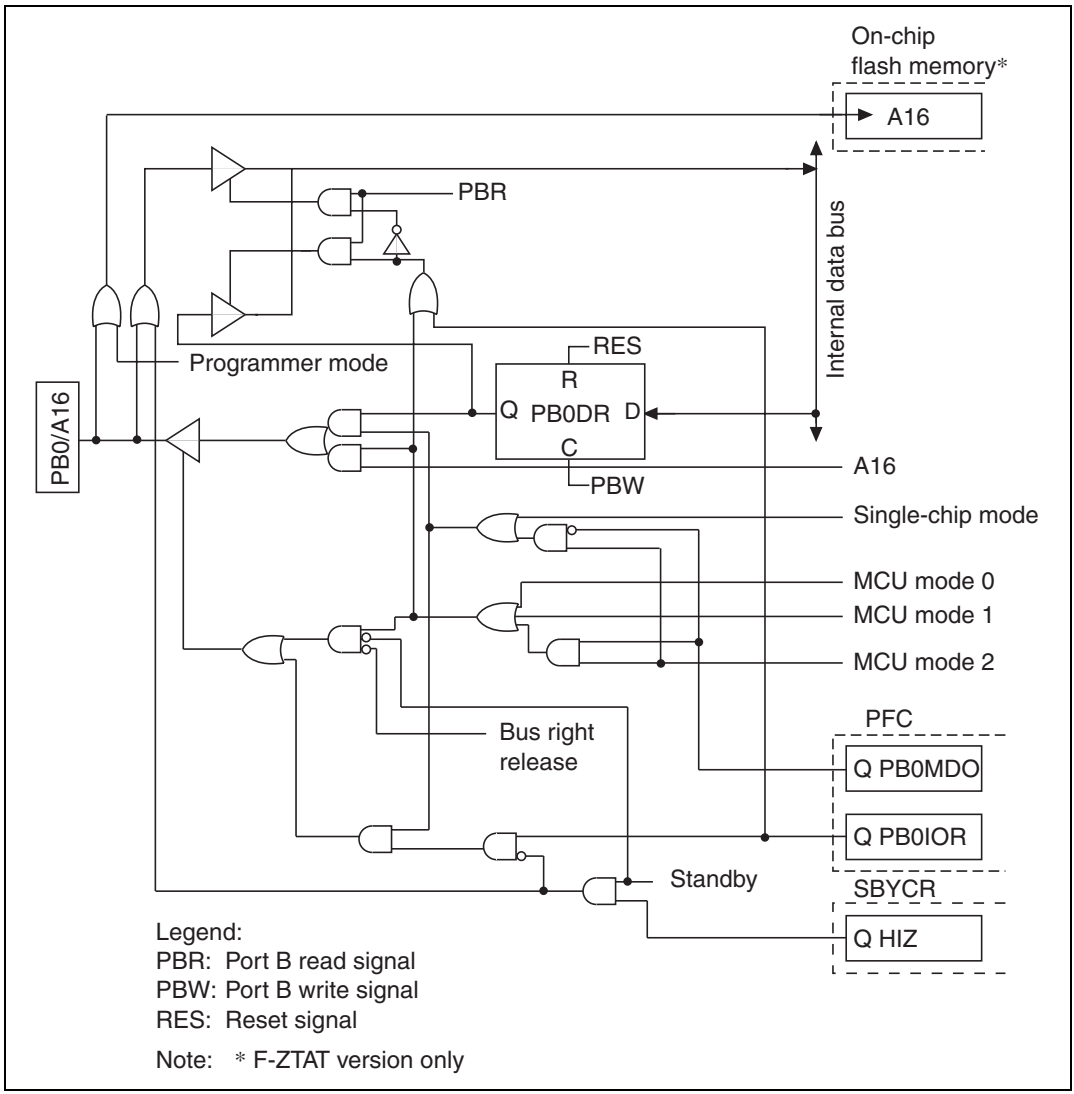

Figure B.10 PB0/A16 Block Diagram (SH7016, SH7017)

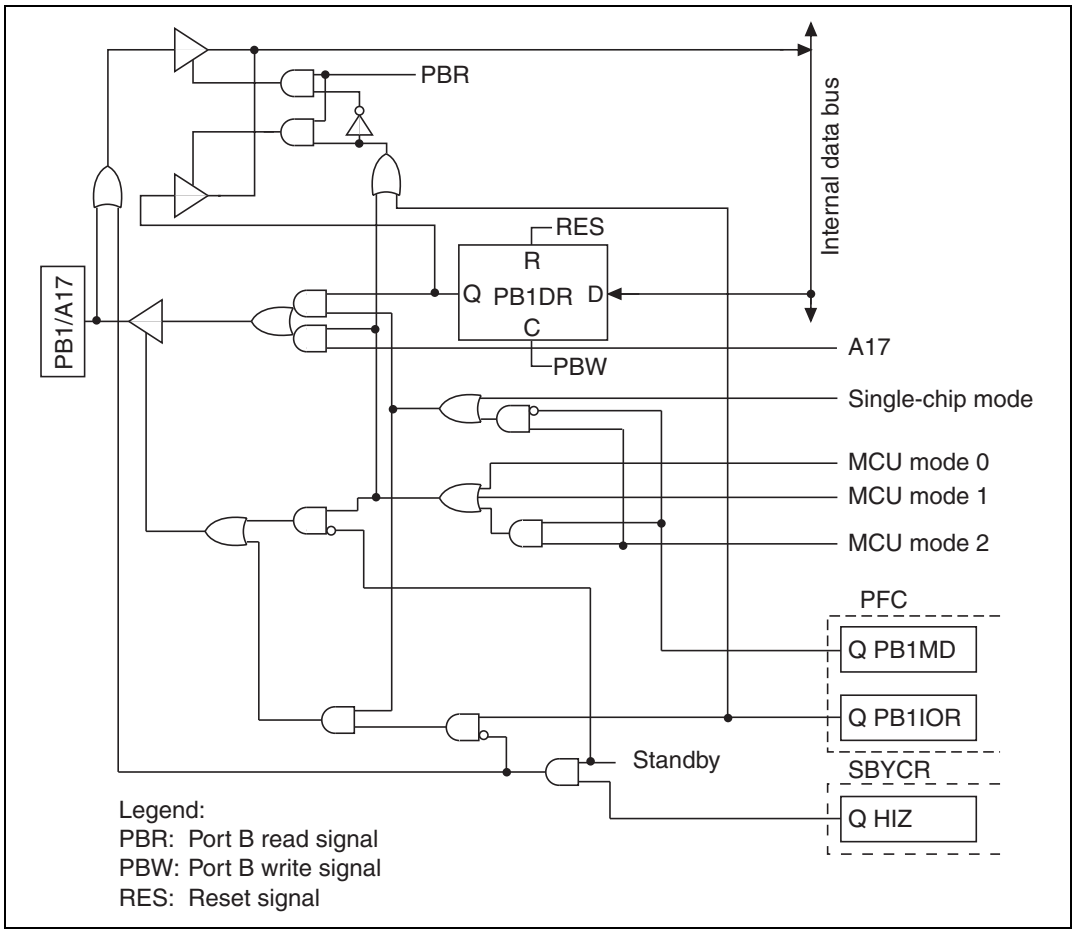

Figure B.11 PB1/A17 Block Diagram (SH7016, SH7017)

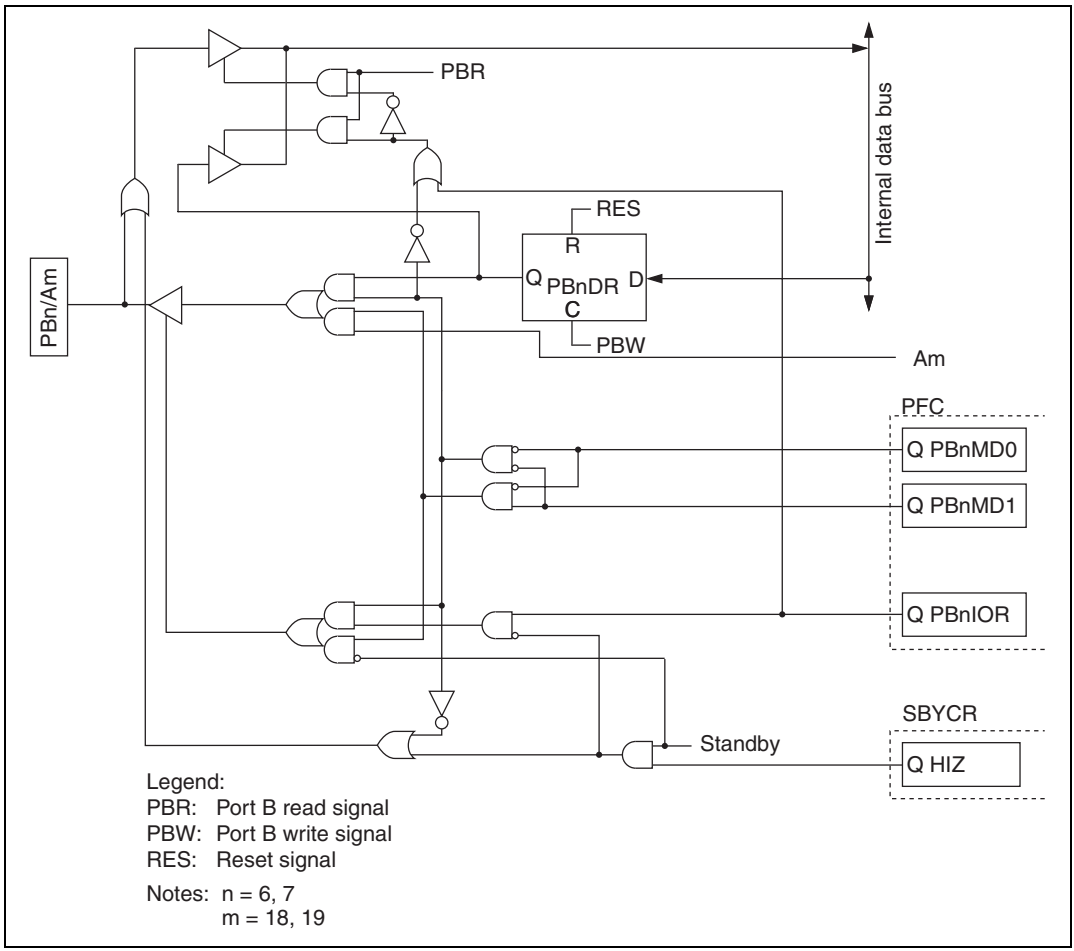

Figure B.12 PBn/Am Block Diagram

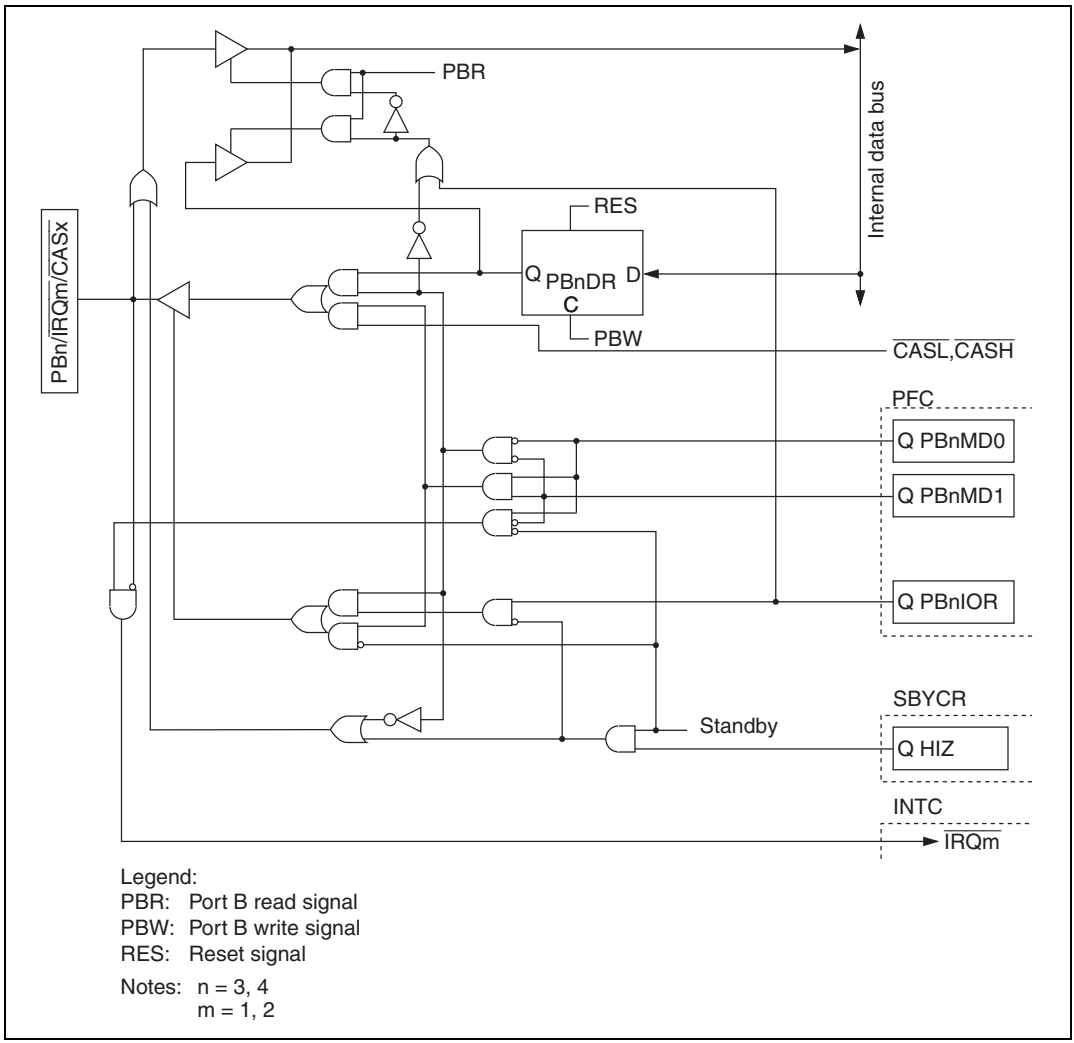

Figure B.13 PBn/IRQm/CASx Block Diagram

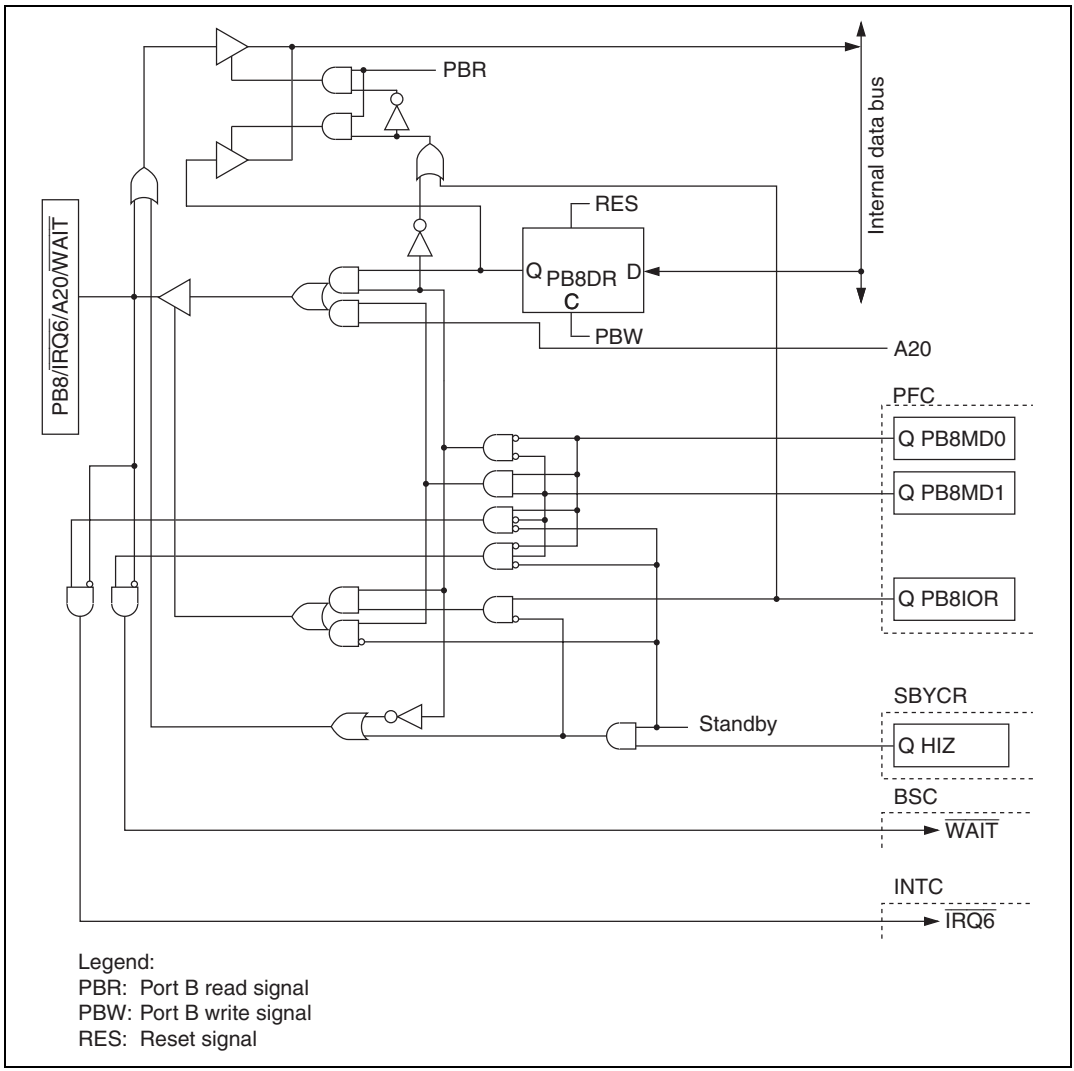

Figure B.14 PB8/$\overline{\text{IRQ6}}$/A20/$\overline{\text{WAIT}}$ Block Diagram

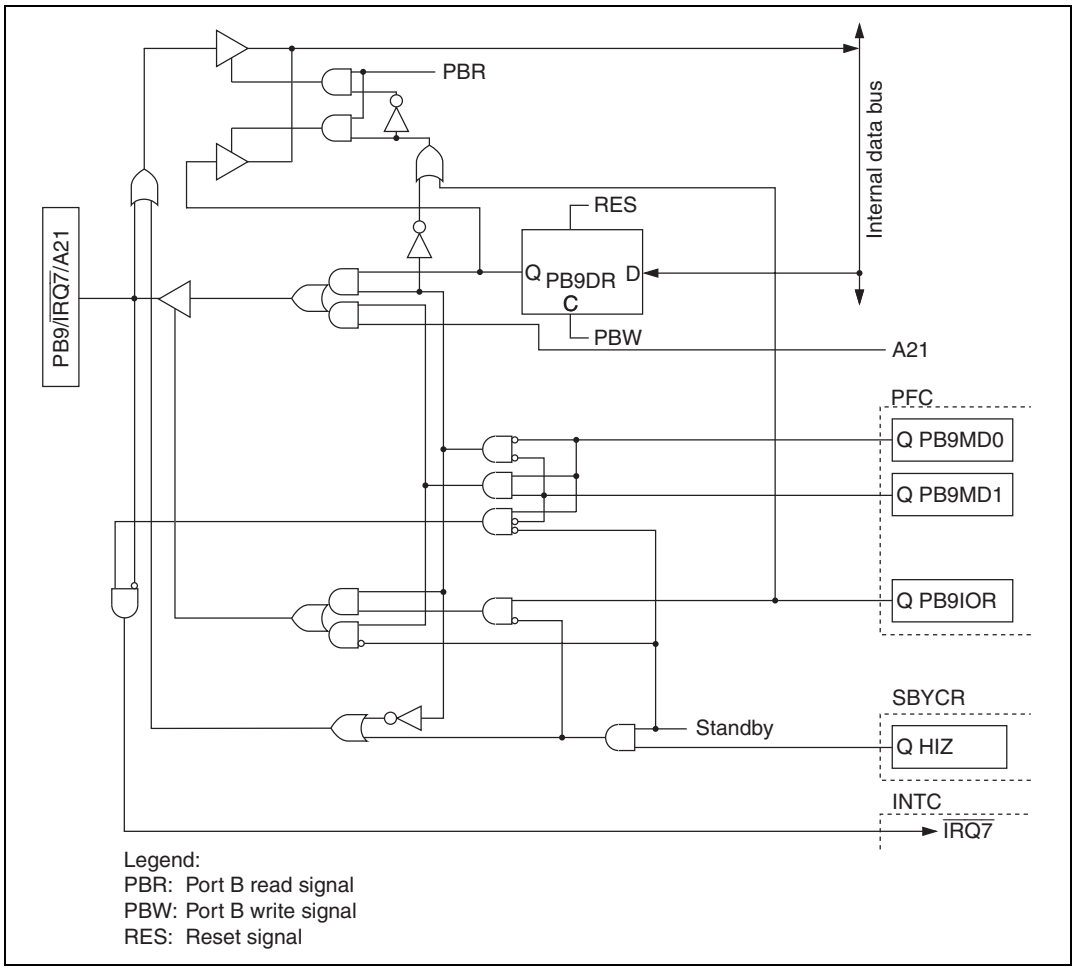

Figure B.15 PB9/IRQ7/A21 Block Diagram

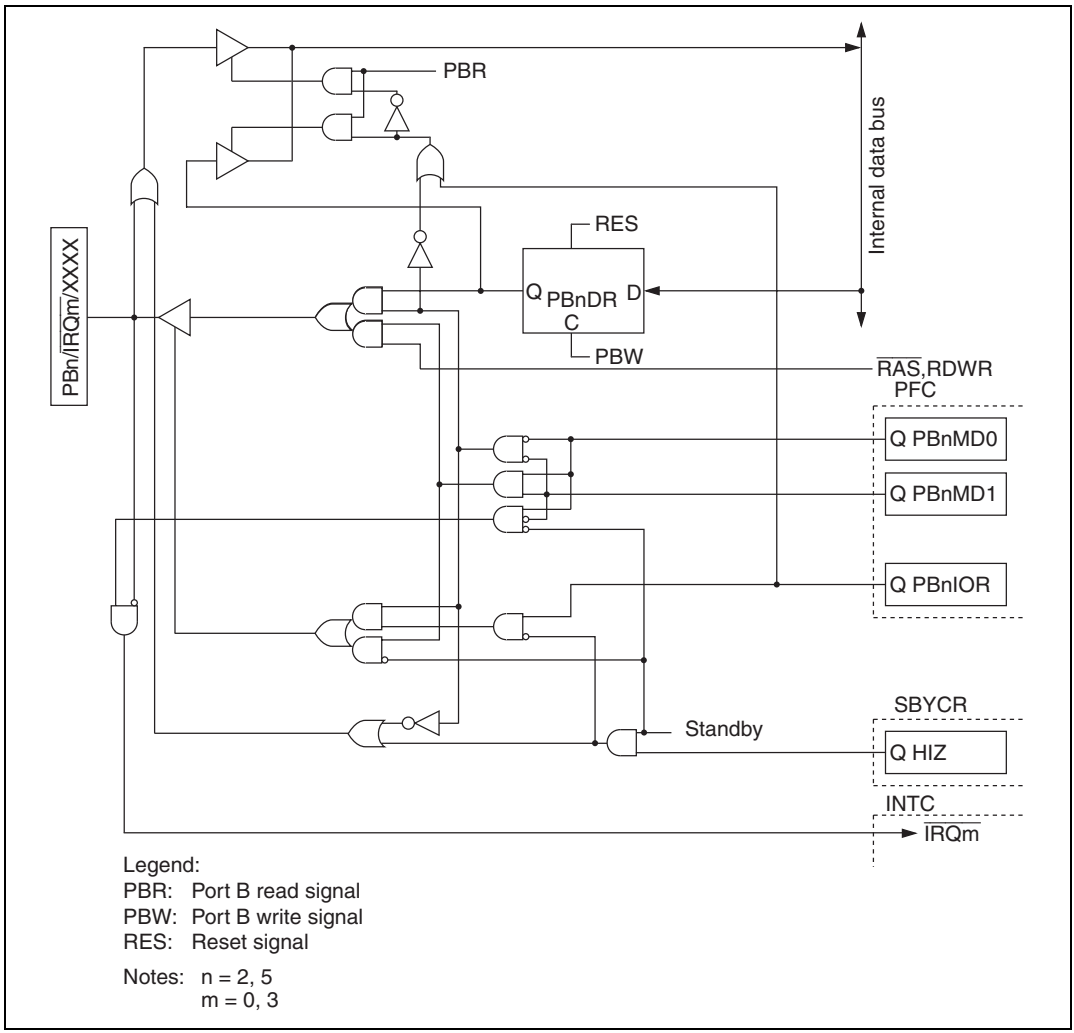

Figure B.16 PBn/$\overline{\text{IRQm}}$/XXXX Block Diagram

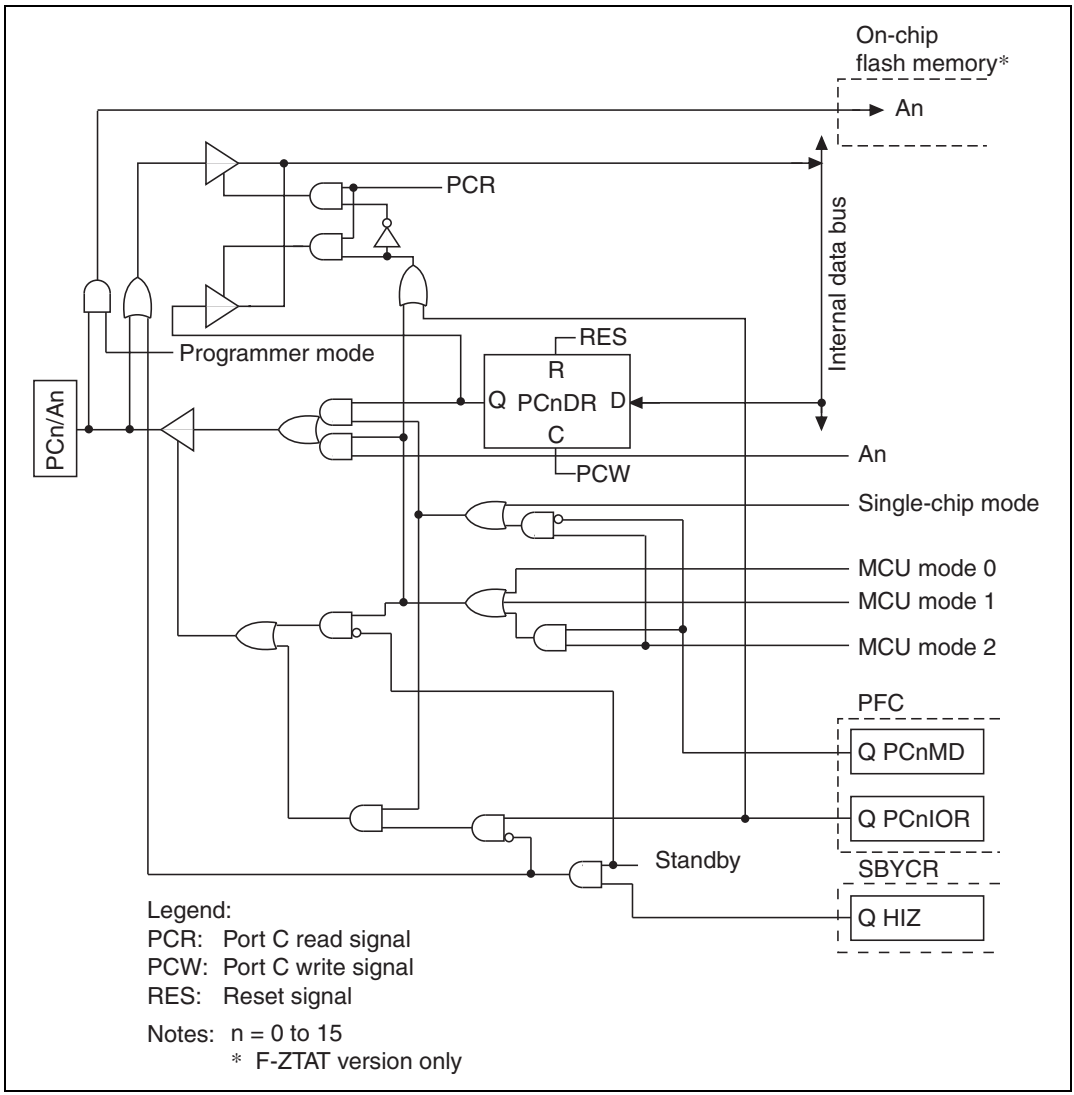

Figure B.17 PCn/An Block Diagram

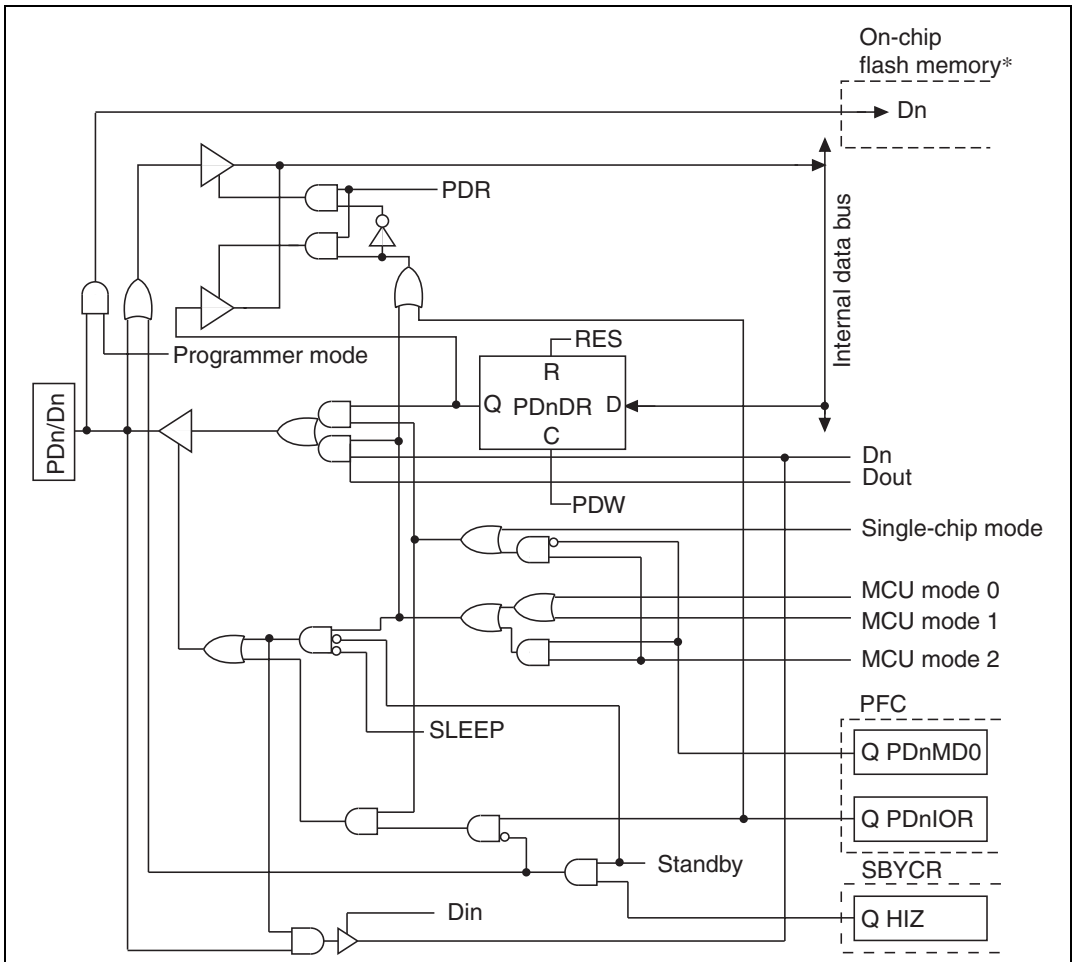

Legend:
PDR: Port D read signal
PDW: Port D write signal
RES: Reset signal
Dout: Data bus output timing signal
Din: Data bus input timing signal

Notes: n = 0 to 15
* F-ZTAT version only

Figure B.18 PDn/Dn Block Diagram (SH7016, SH7017)

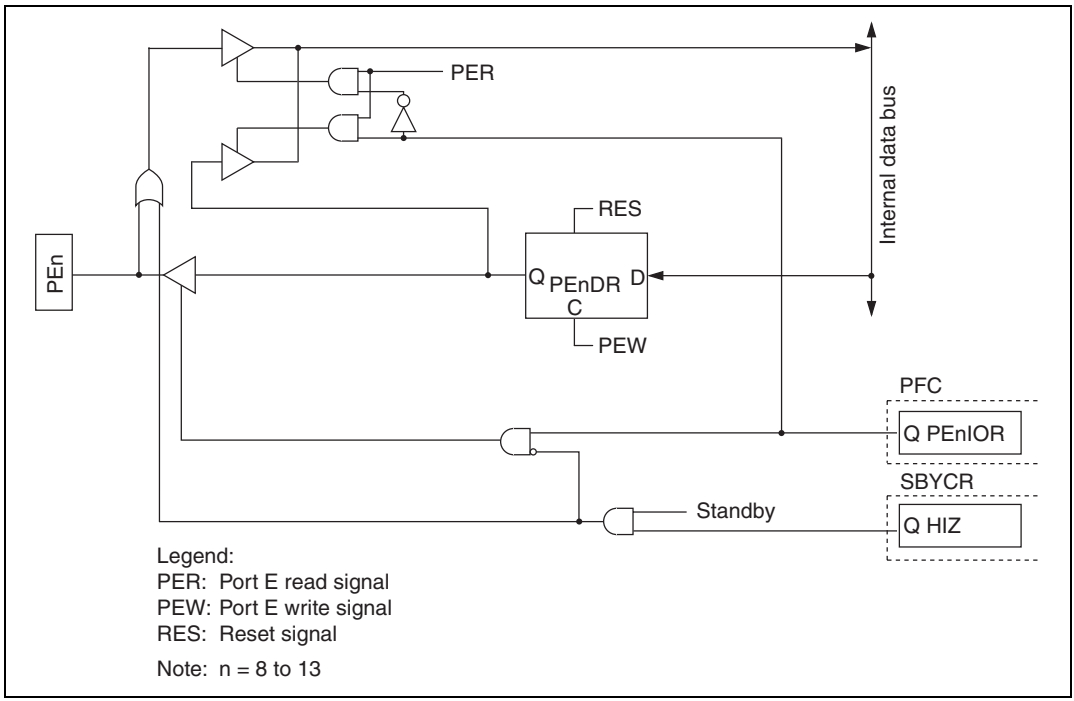

Figure B.19 PEn Block Diagram

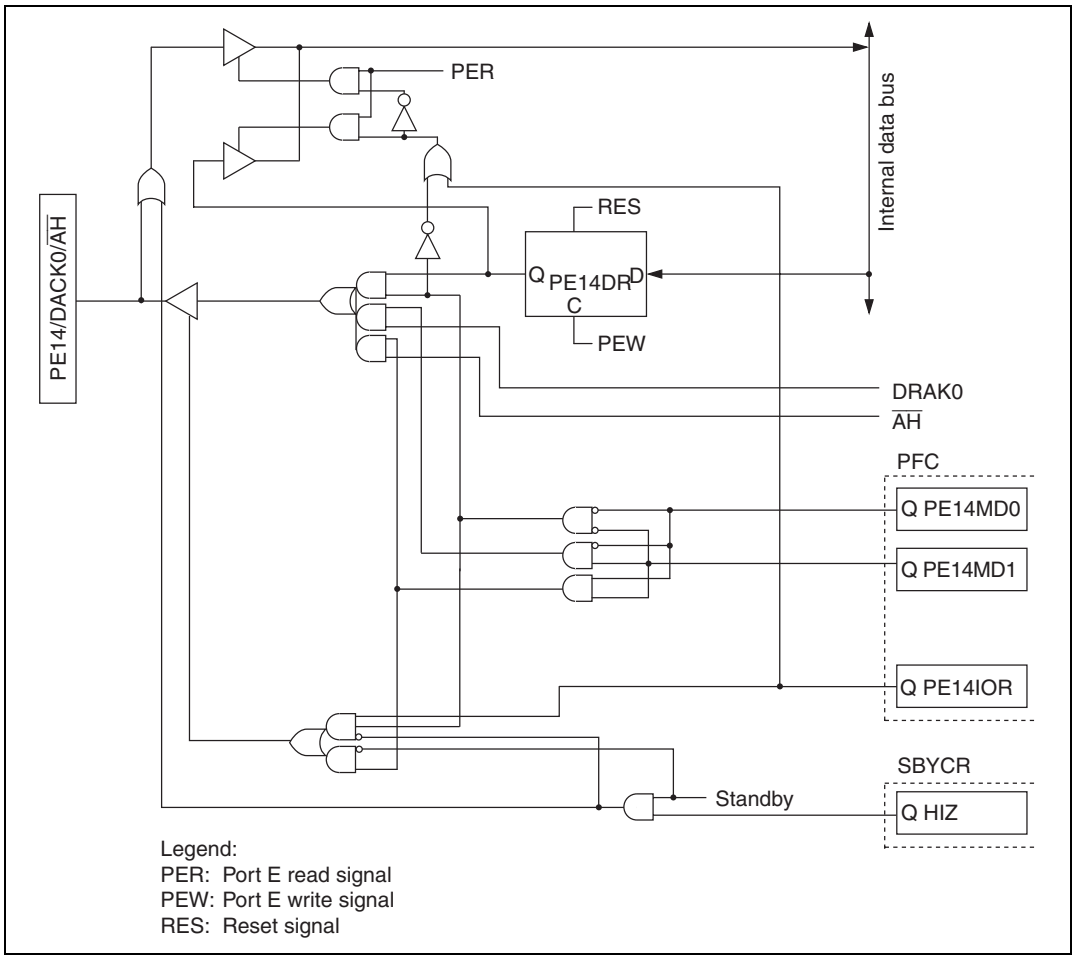

Figure B.20 PE14/DACK0/$\overline{AH}$ Block Diagram

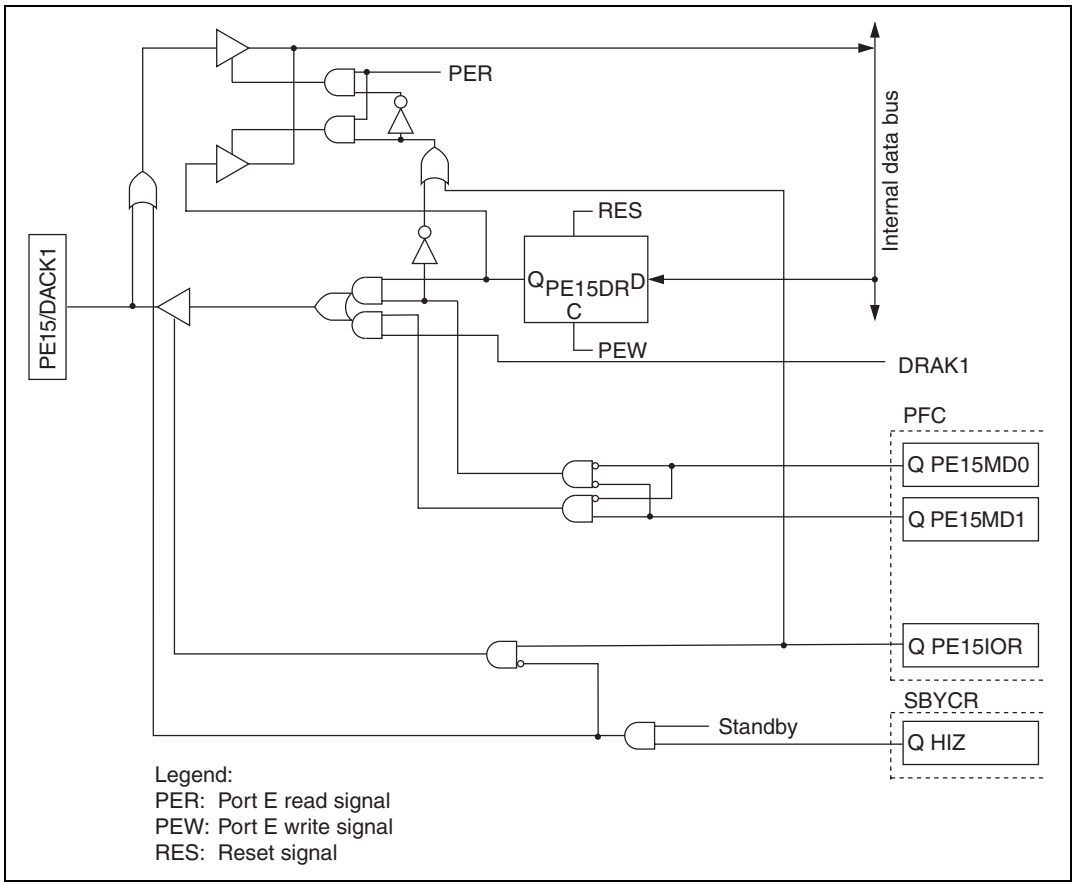

Figure B.21 PE15/DACK1 Block Diagram

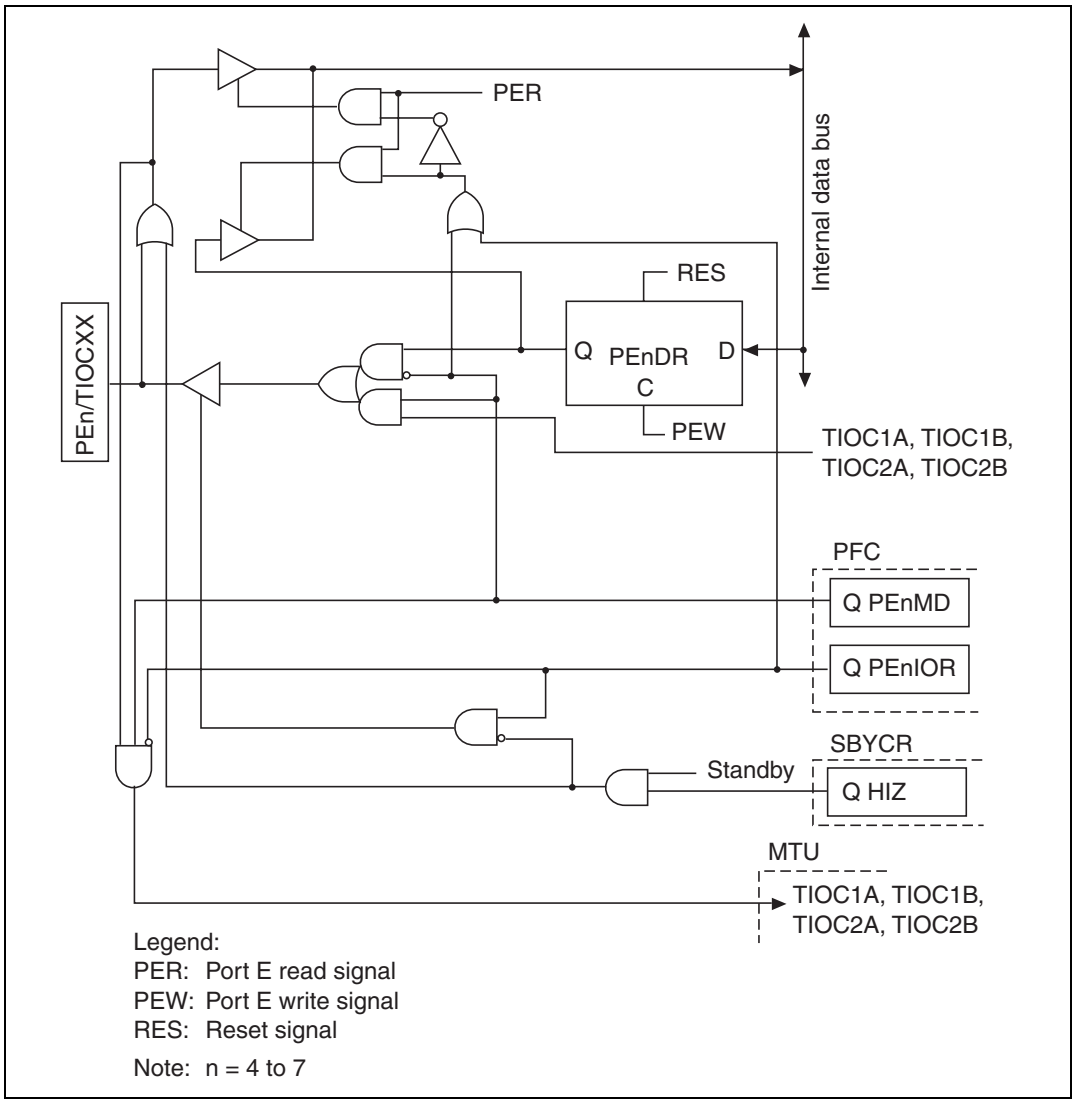

Figure B.22 PEn/TIOCXX Block Diagram

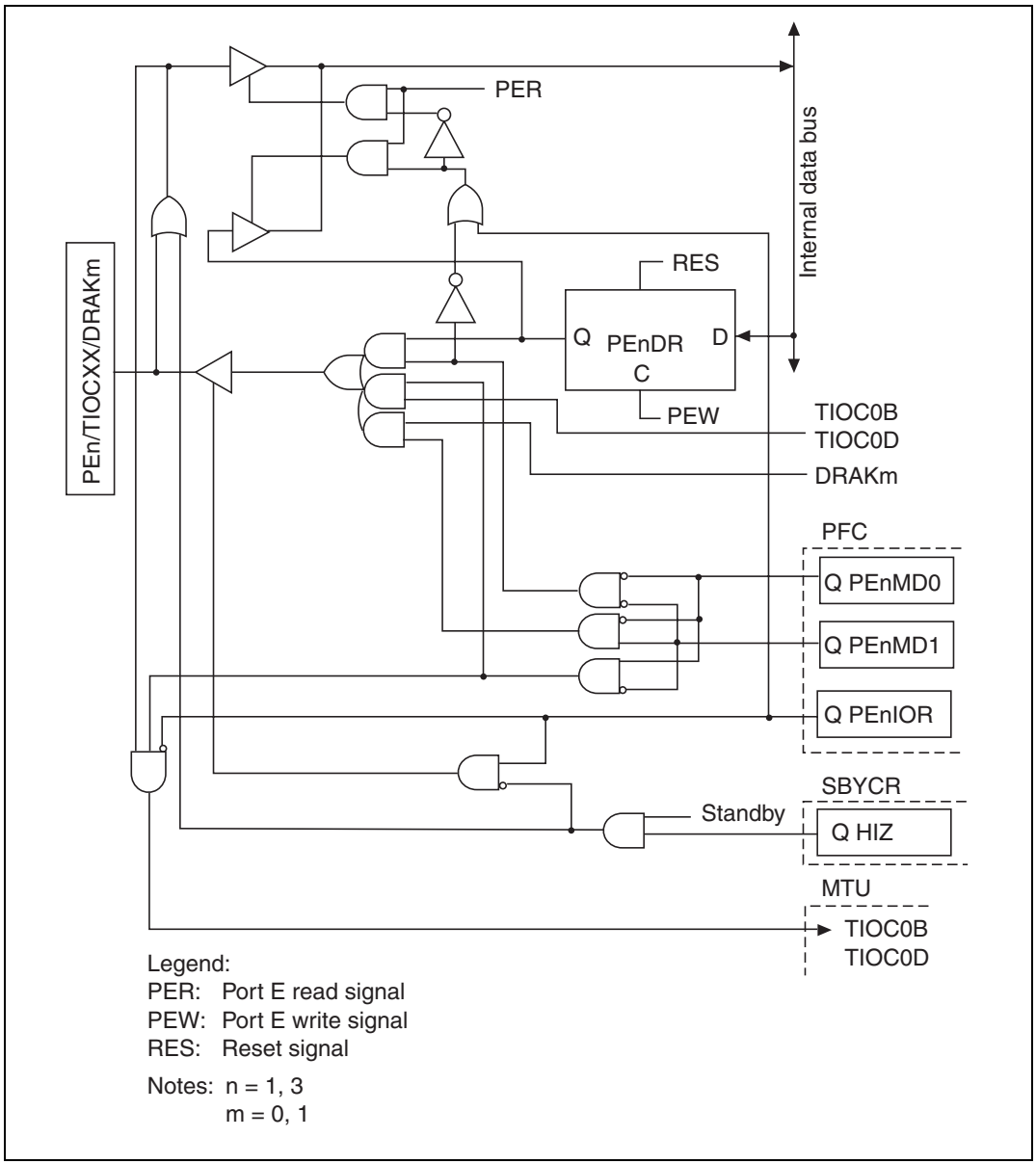

Figure B.23 PEn/TIOCXX/DRAKm Block Diagram

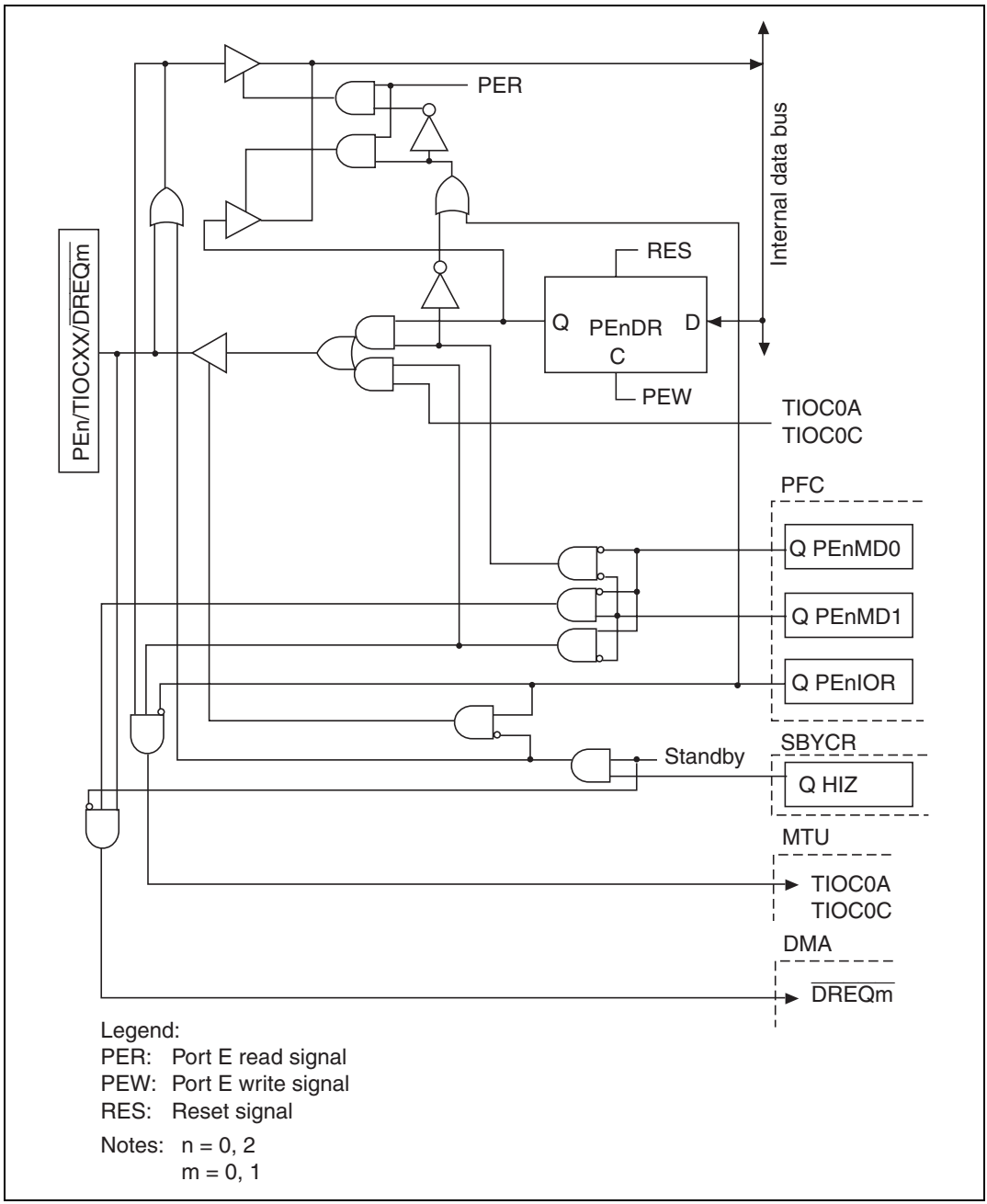

Figure B.24 PEn/TIOCXX/DREQm Block Diagram

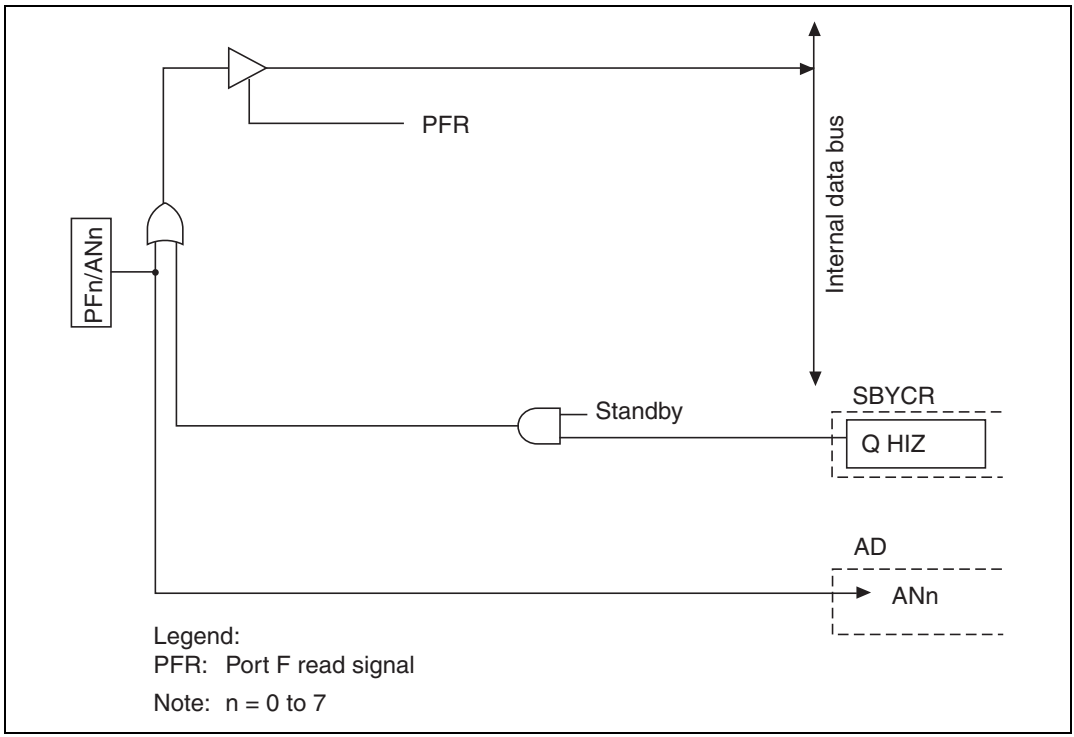

Figure B.25 PFn/ANn Block Diagram

Appendix C Pin States

C.1 Pin States

Table C.1 Pin States in Reset, and Power-Down Modes

Pin Function		Pin modes		
		Reset	Power-Down	
Class	**Pin Name**	**Power-On**	**Standby**	**Sleep**
Clock	CK	O	H*[1]	O
System control	$\overline{\text{RES}}$	I	I	I
	$\overline{\text{WDTOVF}}$	O	O	O
Interrupt	NMI	I	I	I
	$\overline{\text{IRQ0}}$ to $\overline{\text{IRQ3}}$, $\overline{\text{IRQ6}}$, $\overline{\text{IRQ7}}$	Z	Z	I
Address bus	A0 to A21	O	Z	O
Data bus	D0 to D15	Z	Z	I/O
Bus control	$\overline{\text{WAIT}}$	Z	Z	I
	RDWR, $\overline{\text{RAS}}$	Z	O	H
	$\overline{\text{CASH}}$, $\overline{\text{CASL}}$	Z	O	H
	$\overline{\text{RD}}$	H	Z	H
	$\overline{\text{CS0}}$, $\overline{\text{CS1}}$	H	Z	H
	$\overline{\text{CS2}}$, $\overline{\text{CS3}}$	Z	Z	H
	$\overline{\text{WRH}}$, $\overline{\text{WRL}}$	H	Z	H
	$\overline{\text{AH}}$	Z	Z	L
DMAC	DACK0, DACK1	Z	O*[1]	O
	DRAK0, DRAK1	Z	O*[1]	O
	$\overline{\text{DREQ0}}$, $\overline{\text{DREQ1}}$	Z	Z	I
MTU	TIOC0A to TIOC0D, TIOC1A, TIOC1B, TIOC2A, TIOC2B	Z	K*[1]	I/O
	TCLKA to TCLKD	Z	Z	I
SCI	SCK0, SCK1	Z	Z	I/O
	TXD0, TXD1	Z	O*[1]	O
	RXD0, RXD1	Z	Z	I
A/D converter	AN0 to AN7	Z	Z	I

Pin Function		Pin modes		
		Reset	Power-Down	
Class	**Pin Name**	**Power-On**	**Standby**	**Sleep**
I/O Port	PA0 to PA9, PA15	Z	K*1	K
	PB0 to PB9			
	PC0 to PC15			
	PD0 to PD15			
	PE0 to PE15*2			
	PF0 to PF7	Z	Z	I

Legend:

I: Input

O: Output

H: High-level output

L: Low-level output

Z: High impedance

K: Input pin with high impedance, output pin mode maintained.

Notes: 1. If the standby control register port high-impedence bits are set to 1, output pins become high impedence.

2. When an emulator is used, PE9 and PE11 to PE15 become high-impedance in standby mode.

C.2 Pin States of Bus Related Signals

Table C.2 Pin Settings for On-Chip Peripheral Modules

Pin Name		On-Chip ROM (SH7016/17 only)	On-Chip RAM	On-Chip Peripheral Module			
					16-Bit Space		
				8-Bit Space	Upper Byte	Lower Byte	Word/ Longword
$\overline{CS0}$ to $\overline{CS3}$		H	H	H	H	H	H
$\overline{RAS}$*[1]		H	H	H	H	H	H
$\overline{CASH}$*[2]		H	H	H	H	H	H
$\overline{CASL}$*[2]		H	H	H	H	H	H
RDWR		H	H	H	H	H	H
$\overline{AH}$		L	L	L	L	L	L
$\overline{RD}$	R	H	H	H	H	H	H
	W	—	H	H	H	H	H
$\overline{WRH}$	R	H	H	H	H	H	H
	W	—	H	H	H	H	H
$\overline{WRL}$	R	H	H	H	H	H	H
	W	—	H	H	H	H	H
A21 to A0		Address	Address	Address	Address	Address	Address
D15 to D8		Hi-Z	Hi-Z	Hi-Z	Hi-Z	Hi-Z	Hi-Z
D7 to D0		Hi-Z	Hi-Z	Hi-Z	Hi-Z	Hi-Z	Hi-Z

Legend:

R: Read

W: Write

Notes: 1. L asserted in RAS down state or refresh state.

2. L asserted in refresh state.

Table C.3 Pin Settings for Normal External Space

		Normal External Space			
			16-Bit Space		
Pin Name		**8-Bit Space**	**Upper Word**	**Lower Word**	**Word/Longword**
$\overline{CS0}$ to $\overline{CS2}$		Valid	Valid	Valid	Valid
$\overline{CS3}$		H	H	H	H
$\overline{RAS}$*1		H	H	H	H
$\overline{CASH}$*2		H	H	H	H
$\overline{CASL}$*2		H	H	H	H
RDWR		H	H	H	H
$\overline{AH}$		L	L	L	L
$\overline{RD}$	R	L	L	L	L
	W	H	H	H	H
$\overline{WRH}$	R	H	H	H	H
	W	H	L	H	L
$\overline{WRL}$	R	H	H	H	H
	W	L	H	L	L
A21 to A0		Address	Address	Address	Address
D15 to D8		Hi-Z	Data	Hi-Z	Data
D7 to D0		Data	Hi-Z	Data	Data

Legend:

R: Read

W: Write

Valid: Chip select signal corresponding with accessed area is low; chip select signal in other cases is high.

Notes: 1. L asserted in RAS down state or refresh state.

2. L asserted in refresh state.

Table C.4 Pin Settings for Multiplex I/O Space

		Multiplex I/O Space			
			16-Bit Space		
Pin Name		**8-Bit Space**	**Upper Byte**	**Lower Byte**	**Word/Longword**
$\overline{CS0}$ to $\overline{CS2}$		H	H	H	H
$\overline{CS3}$		L	L	L	L
$\overline{RAS}$*1		H	H	H	H
$\overline{CASH}$*2		H	H	H	H
$\overline{CASL}$*2		H	H	H	H
RDWR		H	H	H	H
$\overline{AH}$		Valid	Valid	Valid	Valid
$\overline{RD}$	R	L	L	L	L
	W	H	H	H	H
$\overline{WRH}$	R	H	H	H	H
	W	H	L	H	L
$\overline{WRL}$	R	H	H	H	H
	W	L	H	L	L
A21 to A0		Address	Address	Address	Address
D15 to D8		Hi-Z	Address/Data	Address	Address/Data
D7 to D0		Address/Data	Address	Address/Data	Address/Data

Legend:

R: Read

W: Write

Valid: High output in accordance with $\overline{AH}$ timing

Notes: 1. L asserted in RAS down mode or refresh mode.

2. L asserted in refresh mode.

Table C.5 Pin Settings for DRAM Space

		DRAM Space			
			16-Bit Space		
Pin Name		**8-Bit Space**	**Upper Word**	**Lower Word**	**Word/Longword**
$\overline{CS0}$ to $\overline{CS3}$		H	H	H	H
$\overline{RAS}$*1		Valid	Valid	Valid	Valid
$\overline{CASH}$*2		H	Valid	H	Valid
$\overline{CASL}$*2		Valid	H	Valid	Valid
RDWR	R	H	H	H	H
	W	L	L	L	L
$\overline{AH}$		L	L	L	L
$\overline{RD}$	R	L	L	L	L
	W	H	H	H	H
$\overline{WRH}$	R	H	H	H	H
	W	H	L	H	L
$\overline{WRL}$	R	H	H	H	H
	W	L	H	L	L
A21 to A0		Address	Address	Address	Address
D15 to D8		Hi-Z	Data	Hi-Z	Data
D7 to D0		Data	Hi-Z	Data	Data

Legend:

R: Read

W: Write

Valid: Asserted (low) at a timing determined by the DRAM access strobe waveform

Notes: 1. L asserted in RAS down mode or refresh mode.

2. L asserted in refresh mode.

Appendix D Notes when Converting the F-ZTAT Application Software to the Mask-ROM Versions

Please note the following when converting the F-ZTAT application software to the mask-ROM versions.

The values read from the internal registers for the flash ROM of the mask-ROM version and F-ZTAT version differ as follows.

		Status	
Register	**Bit**	**F-ZTAT Version**	**Mask-ROM Version**
FLMCR1	FWE	0: Application software running	0: Is not read out
		1: Programming	1: Application software running

Note: This difference applies to all the F-ZTAT versions and all the mask-ROM versions that have different ROM size.

Appendix E Product Code Lineup

Table E.1 SH7014, SH7016, and SH7017 Product Code Lineup

Product Type		Product Code	Mark Code	Package (Package code)
SH7014		HD6417014F28	HD6417014F28	112-pin QFP (FP-112)
		HD6417014RF28	HD6417014RF28	112-pin QFP (FP-112)
SH7016	Mask ROM version	HD6437016F28	HD6437016(***)F28	112-pin QFP (FP-112)
SH7017	F-ZTAT version	HD64F7017F28	HD64F7017	112-pin QFP (FP-112)

Note: (***) is the ROM code.

Appendix F Package Dimensions

Package dimensions of the SH7014, SH7016, SH7017 (FP-112) are shown in figure F.1.

JEITA Package Code	RENESAS Code	Previous Code	MASS[Typ.]
P-QFP112-20x20-0.65	PRQP0112JA-A	FP-112/FP-112V	2.4g

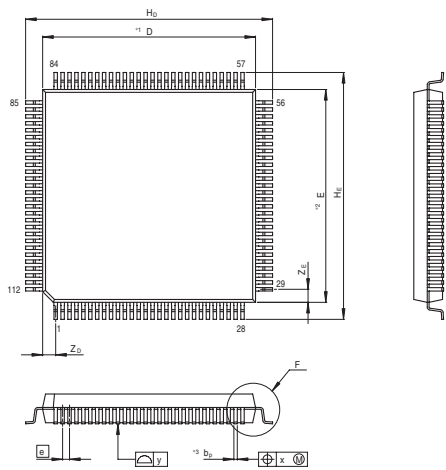

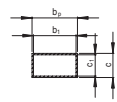

Terminal cross section

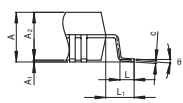

Detail F

NOTE)
1. DIMENSIONS"*1"AND"*2" DO NOT INCLUDE MOLD FLASH
2. DIMENSION"*3"DOES NOT INCLUDE TRIM OFFSET.

Reference Symbol	Dimension in Millimeters		
	Min	Nom	Max
D	—	20	—
E	—	20	—
A_2	—	2.70	—
H_D	22.9	23.2	23.5
H_E	22.9	23.2	23.5
A	—	—	3.05
A_A	0.00	0.10	0.25
b_p	0.24	0.32	0.40
b_1	—	0.30	—
c	0.12	0.17	0.22
c_1	—	0.15	—
θ	0°	—	8°
e	—	0.65	—
x	—	—	0.13
y	—	—	0.10
Z_D	—	1.23	—
Z_E	—	1.23	—
L	0.5	0.8	1.1
L_1	—	1.6	—

Figure F.1 Package Dimensions (FP-112)

Renesas 32-Bit RISC Microcomputer
Hardware Manual
SH7014, SH7016, SH7017F-ZTAT™

Publication Date: 1st Edition, September 1997
Rev.5.00, September 27, 2007
Published by: Sales Strategic Planning Div.
Renesas Technology Corp.
Edited by: Customer Support Department
Global Strategic Communication Div.
Renesas Solutions Corp.

© 2007. Renesas Technology Corp., All rights reserved. Printed in Japan.

Renesas Technology Corp. Sales Strategic Planning Div. Nippon Bldg., 2-6-2, Ohte-machi, Chiyoda-ku, Tokyo 100-0004, Japan

RENESAS SALES OFFICES

http://www.renesas.com

Refer to "**http://www.renesas.com/en/network**" for the latest and detailed information.

Renesas Technology America, Inc.
450 Holger Way, San Jose, CA 95134-1368, U.S.A
Tel: <1> (408) 382-7500, Fax: <1> (408) 382-7501

Renesas Technology Europe Limited
Dukes Meadow, Millboard Road, Bourne End, Buckinghamshire, SL8 5FH, U.K.
Tel: <44> (1628) 585-100, Fax: <44> (1628) 585-900

Renesas Technology (Shanghai) Co., Ltd.
Unit 204, 205, AZIACenter, No.1233 Lujiazui Ring Rd, Pudong District, Shanghai, China 200120
Tel: <86> (21) 5877-1818, Fax: <86> (21) 6887-7898

Renesas Technology Hong Kong Ltd.
7th Floor, North Tower, World Finance Centre, Harbour City, 1 Canton Road, Tsimshatsui, Kowloon, Hong Kong
Tel: <852> 2265-6688, Fax: <852> 2730-6071

Renesas Technology Taiwan Co., Ltd.
10th Floor, No.99, Fushing North Road, Taipei, Taiwan
Tel: <886> (2) 2715-2888, Fax: <886> (2) 2713-2999

Renesas Technology Singapore Pte. Ltd.
1 Harbour Front Avenue, #06-10, Keppel Bay Tower, Singapore 098632
Tel: <65> 6213-0200, Fax: <65> 6278-8001

Renesas Technology Korea Co., Ltd.
Kukje Center Bldg. 18th Fl., 191, 2-ka, Hangang-ro, Yongsan-ku, Seoul 140-702, Korea
Tel: <82> (2) 796-3115, Fax: <82> (2) 796-2145

Renesas Technology Malaysia Sdn. Bhd
Unit 906, Block B, Menara Amcorp, Amcorp Trade Centre, No.18, Jalan Persiaran Barat, 46050 Petaling Jaya, Selangor Darul Ehsan, Malaysia
Tel: <603> 7955-9390, Fax: <603> 7955-9510

Colophon 6.0

SH7014, SH7016, SH7017F-ZTAT™
Hardware Manual

Renesas Electronics Corporation
1753, Shimonumabe, Nakahara-ku, Kawasaki-shi, Kanagawa 211-8668 Japan

REJ09B0398-0500

Mouser Electronics

Authorized Distributor

Click to View Pricing, Inventory, Delivery & Lifecycle Information:

Renesas Electronics:

HD64F7017F28V