N-Channel Enhancement Mosfet

Features

- 40V,85A
  $R_{DS(ON)}$ <5.0mΩ @V_{GS}=10V TYP:4.2mΩ
  $R_{DS(ON)}$ <8.0mΩ @V_{GS}=4.5V TYP:6.2mΩ
- Split Gate Trench Technology
- Lead free product is acquired
- Excellent $R_{DS(ON)}$ and Low Gate Charge

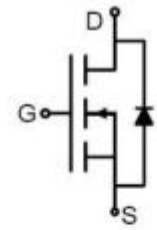

Schematic Diagram

Applications

- Load Switching
- Motor Driver

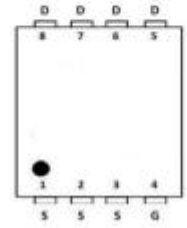

Marking and pin Assignment

Package Marking and Ordering Information

Device Marking	Device	Device Package	Reel Size	Tape width	Quantity (PCS)
4006	MSQ4006	PDFN3X3	-	-	5000

ABSOLUTE MAXIMUM RATINGS (T_J=25℃ unless otherwise noted)

Parameter	Symbol	Value	Unit
Drain-Source Voltage	V_{DS}	40	V
Gate-Source Voltage	V_{GS}	±20	V
Continuous Drain Current (Tc=25℃) (1)	I_D	85	A
Continuous Drain Current (Tc=100℃)	I_D	54	A
Pulsed Drain Current (1)	I_{DM}	339	A
Drain Power Dissipation	P_D	54	W
Single Pulsed Avalanche Energy (2)	E_{AS}	101	mJ
Thermal Resistance from Junction to Ambient (3)	$R_{\theta JA}$	50	℃/W
Thermal Resistance from Junction to Case	$R_{\theta JC}$	2.3	℃/W
Junction Temperature	T_J	-55~ +150	℃
Storage Temperature	T_{STG}	-55~ +150	℃

Notes:

1) Repetitive Rating: pulse width limited by maximum junction temperature
2) EAS condition : T_J=25℃, V_{DD}=20V, V_G=10V, L=1.0mH, R_g=25Ω, I_{AS}=14.2A
3) The value of RθJA Mounted on FR4 Board（25.4mm*25.4mm*t1.6mm）With 2oz Copper TA=25℃

MOSFET ELECTRICAL CHARACTERISTICS(T_J=25℃ unless otherwise noted)

Parameter	Symbol	Test Condition	Min	Type	Max	Unit
Static Characteristics						
Drain-source breakdown voltage	$V_{(BR)DSS}$	V_{GS} = 0V, I_D =250μA	40	-	-	V
Zero gate voltage drain current	I_{DSS}	V_{DS} =40V, V_{GS} = 0V	-	-	1	μA
Gate-body leakage current	I_{GSS}	V_{GS} =±20V, V_{DS} = 0V	-	-	±100	nA
Gate threshold voltage	$V_{GS(th)}$	V_{DS} =V_{GS}, I_D =250μA	1.2	1.7	2.5	V
Drain-source on-resistance	$R_{DS(on)}$	V_{GS} =10V, I_D =20A	-	4.2	5.0	mΩ
		V_{GS} =4.5V, I_D =15A	-	6.2	8.0	
Forward transconductance	R_g	V_{GS}= 0V, V_{DS}= 0V, f=1.0MHz	-	4.0	-	Ω
Dynamic characteristics						
Input Capacitance	C_{iss}	V_{DS} =20V, VGS=0V, f=1MHz	-	994	-	pF
Output Capacitance	C_{oss}		-	602	-	
Reverse Transfer Capacitance	C_{rss}		-	23	-	
Switching characteristics						
Turn-on delay time	$t_{d(on)}$	V_{DD}=20V, I_D=20A, R_G=3Ω, V_{GS}=10V	-	1.3	-	nS
Turn-on rise time	t_r		-	12	-	
Turn-off delay time	$t_{d(off)}$		-	17	-	
Turn-off fall time	t_f		-	12	-	
Total Gate Charge	Qg	V_{DS}=20V, I_D=20A, V_{GS}=10V	-	14.3	-	nC
Gate-Source Charge	Qgs		-	3.1	-	
Gate-Drain Charge	Qgd		-	1.8	-	
Source-Drain Diode characteristics						
Diode Forward voltage	V_{SD}	T_J=25℃, V_{GS} =0V, I_S=20A	-	0.8	1.2	V
Diode Forward current	I_S	T_C=25℃	-	-	85	A
Body Diode Reverse Recovery Time	trr	T_J=25℃, I_F=20A,di/dt=100A/us	-	30	-	nS
Body Diode Reverse Recovery Charge	Qrr		-	11	-	nC

Test Circuit & Waveform

Gate Charge Test Circuit & Waveform

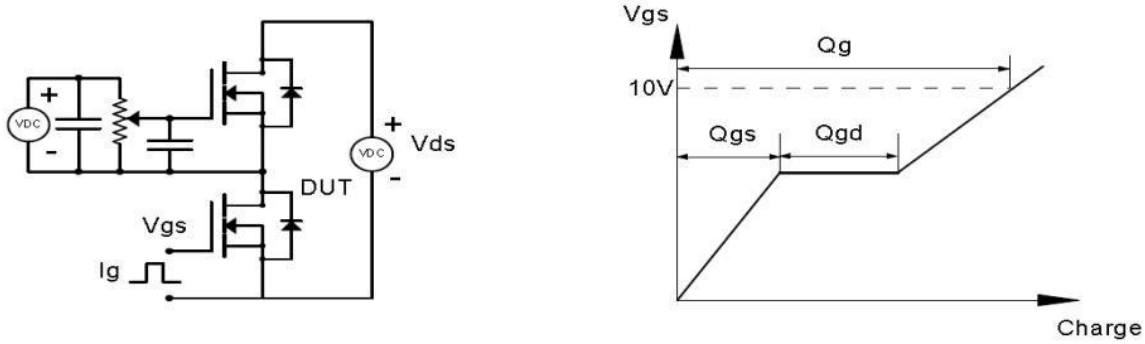

Resistive Switching Test Circuit & Waveforms

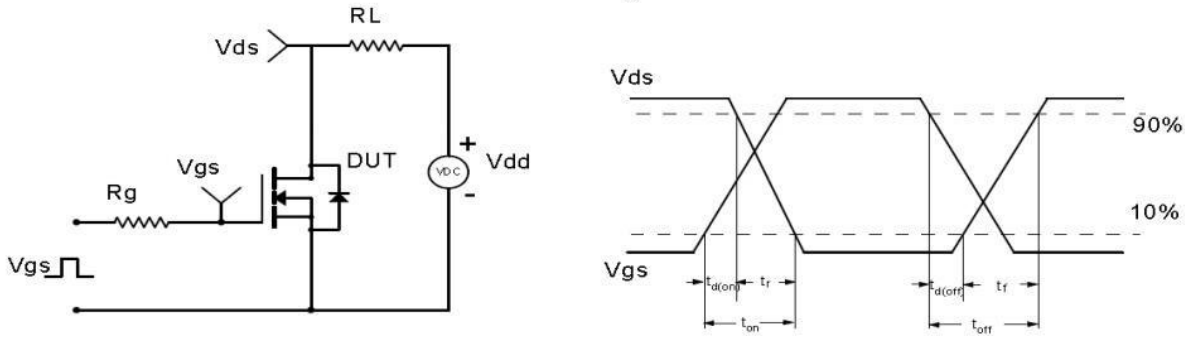

Unclamped Inductive Switching (UIS) Test Circuit & Waveforms

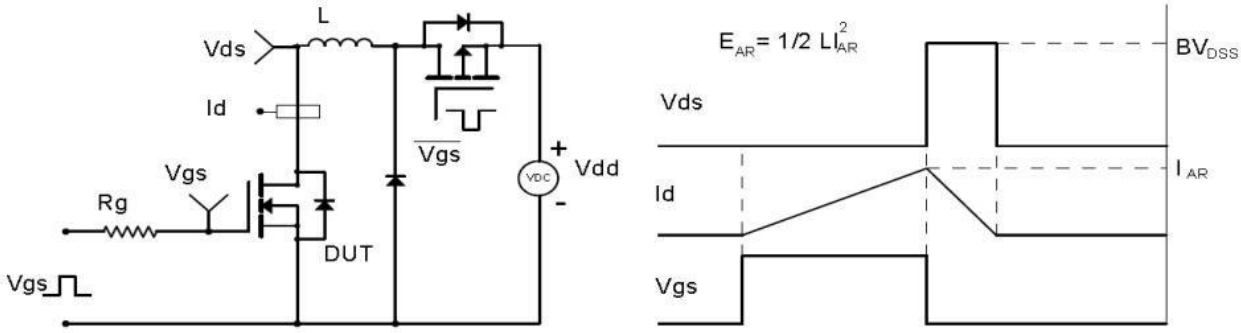

Diode Recovery Test Circuit & Waveforms

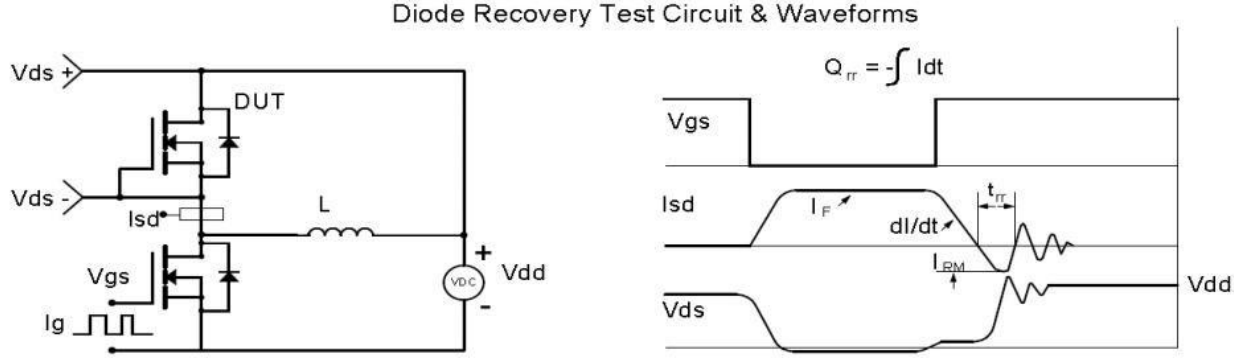

Typical Characteristics

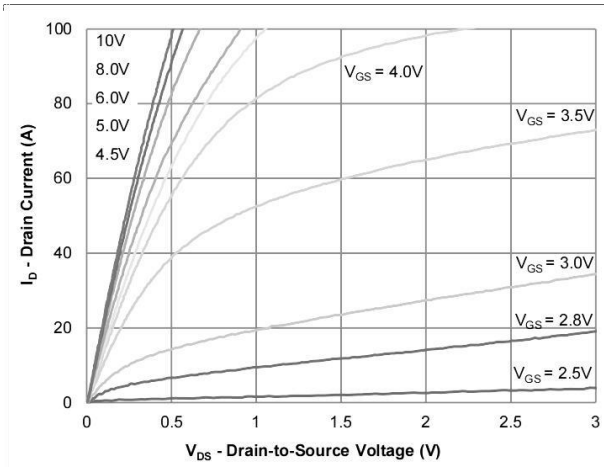

Figure 1: Output Characteristics

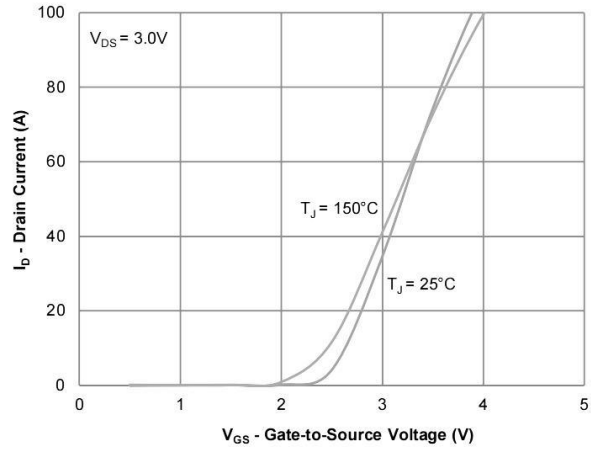

Figure 2: Transfer Characteristics

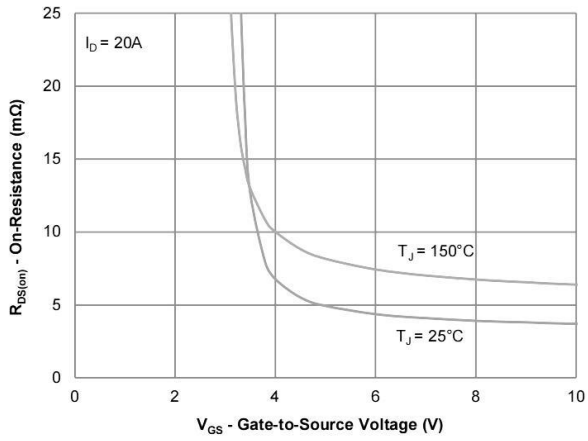

Figure 3: On-Resistance vs. Gate-Source Voltage

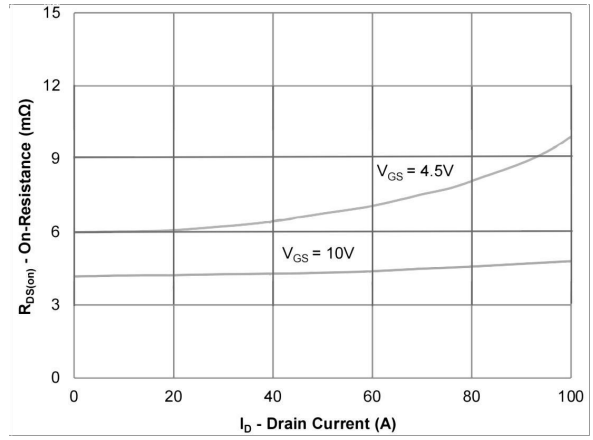

Figure 4: On-Resistance vs. Gate-Source Voltage

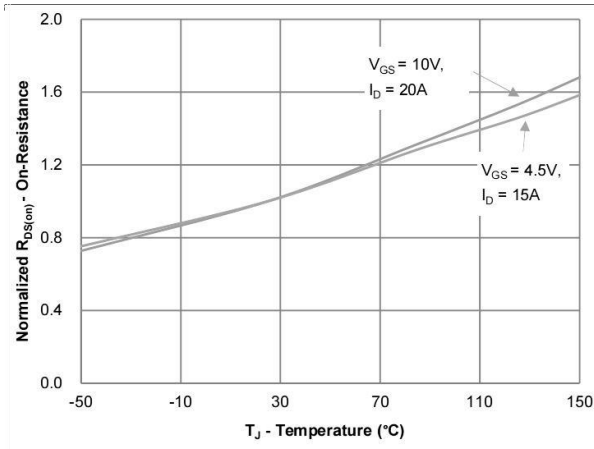

Figure 5: On-Resistance vs. Junction Temperature

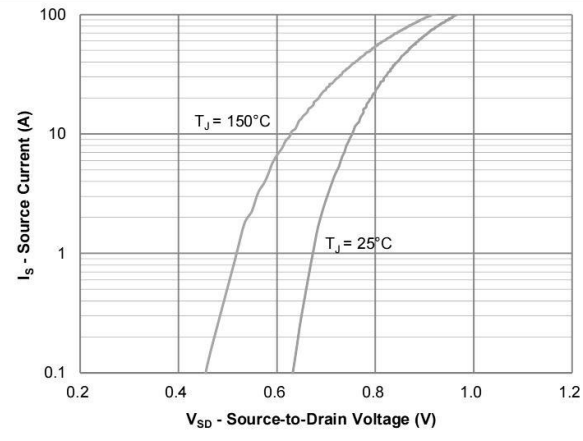

Figure 6: Source-Drain Diode Forward Voltage

Typical Characteristics

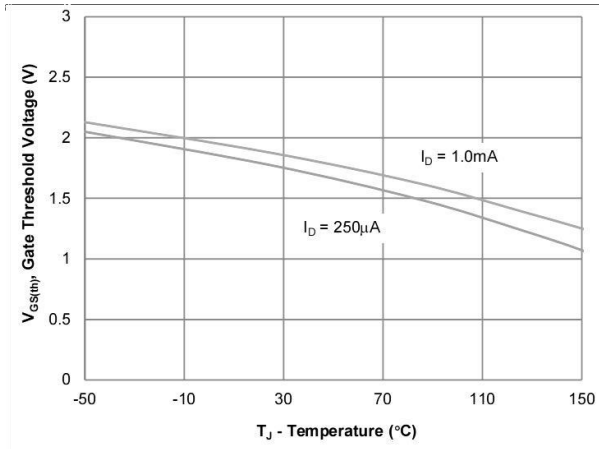

Figure 7: Gate Threshold Variation vs. Junction Temperature

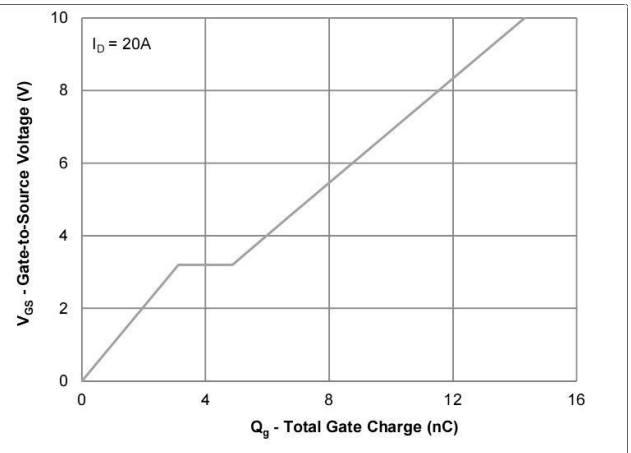

Figure 8: Gate Charge Characteristics

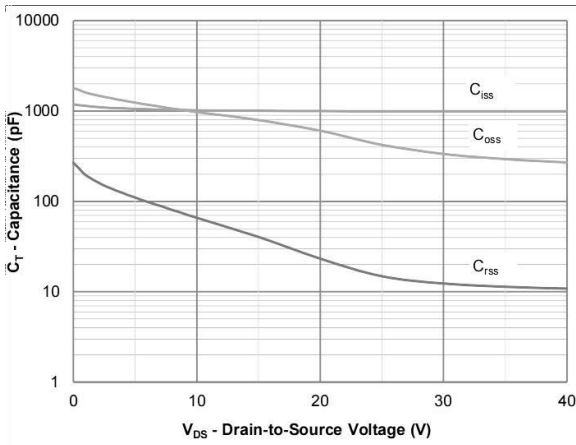

Figure 9: Capacitance Characteristics

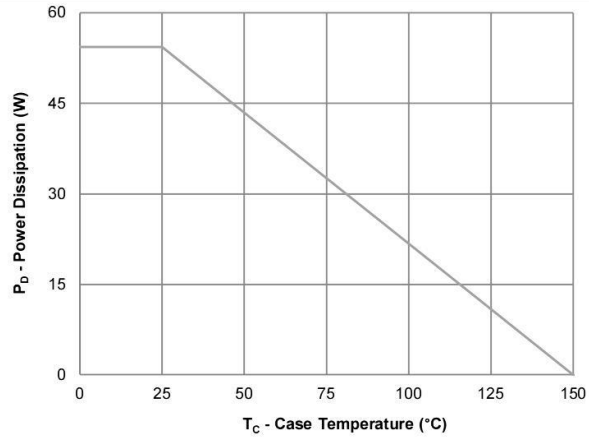

Figure 10: Power Derating

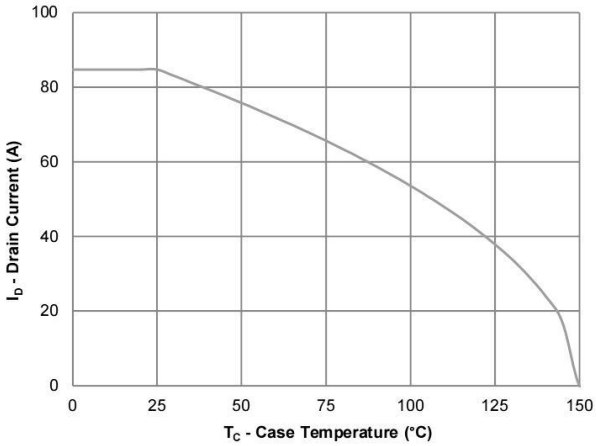

Figure 11: Current Derating

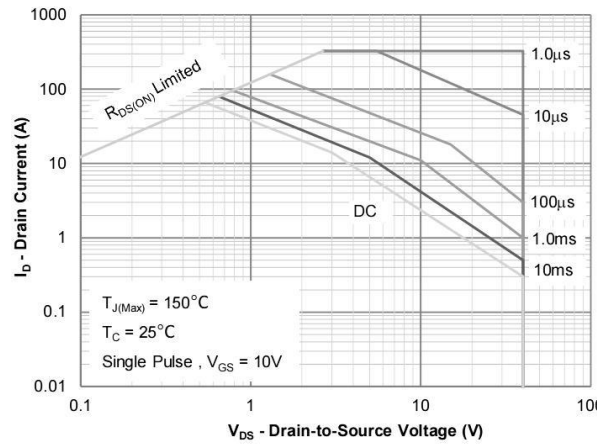

Figure 12: Safe Operating Area

Typical Characteristics

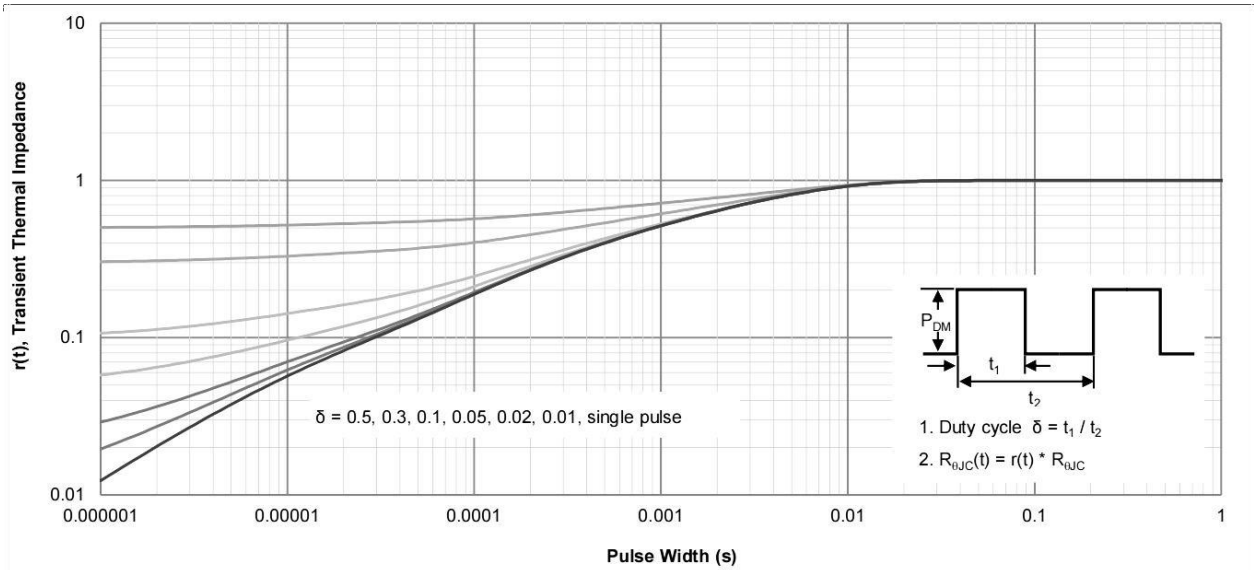

Figure 13: Normalized Maximum Transient Thermal Impedance

PDFN3X3 Package Information

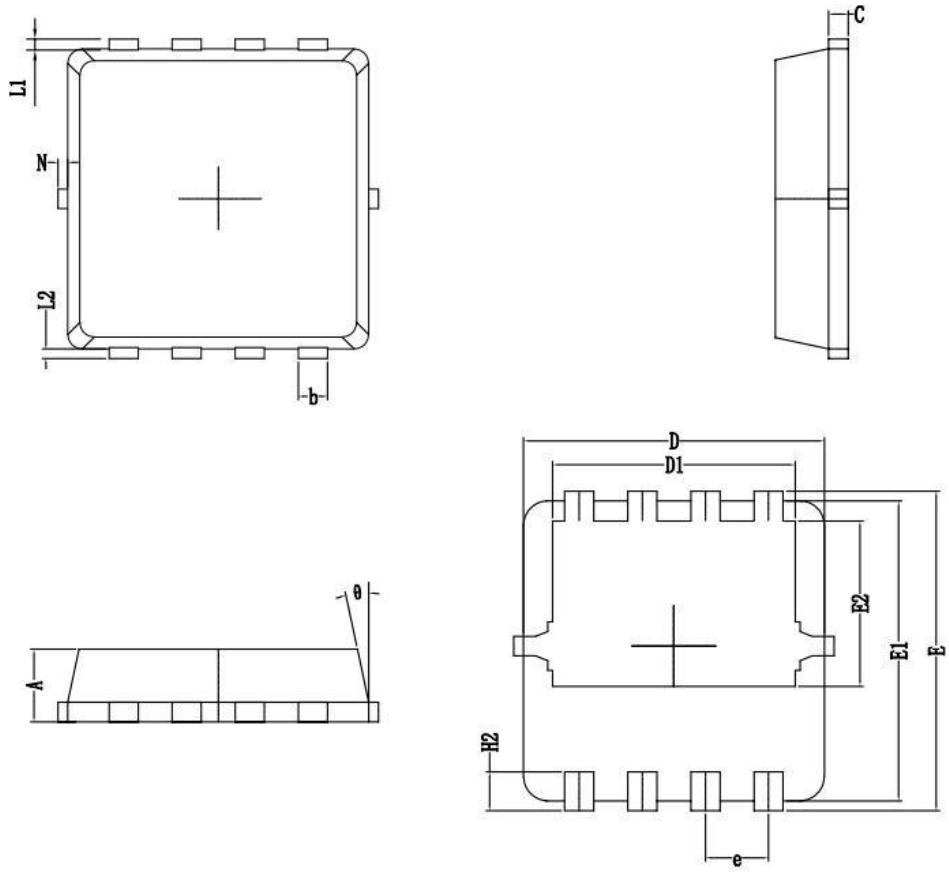

Symbols	Millimeters		
	MIN.	NOM.	MAX.
A	0.70	0.80	0.90
b	0.25	0.30	0.35
C	0.14	0.15	0.16
D	3.00	3.10	3.20
L1/L2	0.10 REF.		
D1	2.35	2.50	2.60
N	0	-	0.10
E	3.20	3.30	3.40
E1	3.00	3.10	3.20
E2	1.72	1.82	1.92
e	0.65 BSC.		
θ	11°	12°	13°
H2	0.30	0.40	0.50